Parts Catalogue

Land Rover Series III

PART No. RTC 9841 CE

JUNE 1988

LAND ROVER GENUINE PARTS

Parts Catalogue

Part No RTC9841CE

June 1988

Whilst every effort is made to ensure the accuracy of the particulars contained in this Catalogue, modifications and vehicle specification changes may effect the information specified. No responsibility is accepted for the incorrect supply of parts or any other consequence that may arise as a result of information in this Catalogue not being in accord with modifications or vehicle specification changes which are subsequent to the date of this Catalogue. Also no responsibility is accepted for the incorrect supply of parts or any other consequence that may arise as a result of any misinterpretation of the information specified in this Catalogue.

LAND ROVER UK LTD 1987

All rights reserved. No part of this publication may be reproduced, stored in a retrieval system or transmitted, in any form, electronic, mechanical, photocopying, recording or other means without prior written permission from Land Rover Parts & Equipment Ltd.

Land Rover

SERIES III. 88, 109 & 109V8

LAND ROVER PARTS LTD

GROUP INDEX. TABLE DES SECTIONS. GRUPPENVERZEICHNIS.

Group A Introduction Introduction Einführung	**1B 02** **2B 02** **3B 02**	**Group G** Brakes and Brake Controls Freins Et Commandes Bremsen und Bedienungsorgane	**1L**
Group A Pictorial Index Table des Matières illustrée Verzeichnis der Abbildungen	**1B 08** **2B 08** **3B 08**	**Group H** Fuel, Exhaust, Emission Systems Systèmes d'alimentation en carburant, d'échappement et d'anti-pollution Kraftstoff-, Auspuff- und Abgasentgiftungsanlagen	**1M-Ø** **2C**
Group A Alphabetical Index Table alphabétique Alphabetisches Verzeichnis	**1B 12** **2B 12** **3B 12**	**Group J** Cooling, Heating and Air Conditioning Refroidissement, Chauffage, Aeration Kuhlüng, Heizung, Luftung	**2D**
Group B Engine Moteur Motor	**1C-F**	**Group K** Electrical, Washers-Wipers, Instruments Electricité, Essuie Glace, Instruments Elektrische, Scheibenwischer, Instrumente	**2E-F**
Group C Flywheel and Clutch Volant Et Embrayage Schwungrad und Kupplüng	**1G**	**Group L** Chassis, Subframes, Bodyshell, Fittings Chassis, Soubassement, Cabine Chassis Teile, Hilfsrahmen, Kabine	**2G-2I**
Group D Gearbox and Propshaft Boîte de Vitesses et Cardan Getriebe und Antriebswelle	**1H-I**	**Group M** Fascia, Trim, Seats and Fixings Tableau de Bord, Garnitures Intérieure, Sièges Armaturenbrett, Polsterung und Sitz	**2J-K**
Group E Axles, Suspension, Drive Shafts, Wheels Axe, Suspension, Arbre de Commande, Roues Achse, Aufhangung, Antriebswelle, Rad	**1J**	**Group N** Miscellaneous Divers Vermischt	**2L**
Group F Steering Direction Lenkung	**1K**	**Group P** Numerical Index Index Numérique Nummernverzeichnis	**3C-I**

SERIES III LAND ROVER COMMENCING VEHICLE NUMBERS

UP TO OCTOBER 1979

2¼ LITRE PETROL MODELS

88		109	
Home	90100001A	Home	91100001A
Export RH Stg	90200001A	Export RH Stg	91200001A
Export CKD RH Stg	90300001A	Export CKD RH Stg	91300001A
Export LH Stg	90400001A	Export LH Stg	91400001A
Export CKD LH Stg	90500001A	Export CKD LH Stg	91500001A

88 Station Wagon		109 Station Wagon	
Home	92100001A	Home	93100001A
Export RH Stg	92200001A	Export RH Stg	93200001A
Export CKD RH Stg	92300001A	Export CKD RH Stg	93300001A
Export LH Stg	92400001A	Export LH Stg	93400001A
Export CKD LH Stg	92500001A	Export CKD LH Stg	93500001A

2¼ LITRE DIESEL MODELS

88		109	
Home	90600001A	Home	91600001A
Export RH Stg	90700001A	Export RH Stg	91700001A
Export CKD RH Stg	90800001A	Export CKD RH Stg	91800001A
Export LH Stg	90900001A	Export LH Stg	91900001A
Export CKD LH Stg	91000001A	Export CKD LH Stg	92000001A

88 Station Wagon		109 Station Wagon	
Home	92600001A	Home	93600001A
Export RH Stg	92700001A	Export RH Stg	93700001A
Export CKD RH Stg	92800001A	Export CKD RH Stg	93800001A
Export LH Stg	92900001A	Export LH Stg	93900001A
Export CKD LH Stg	93000001A	Export CKD LH Stg	94000001A

2.6 LITRE PETROL MODELS

109		109 Station Wagon	
Home	94100001A	Home	94600001A
Export RH Stg	94200001A	Export RH Stg	94700001A
Export CKD RH Stg	94300001A	Export CKD RH Stg	94800001A
Export LH Stg	94400001A	Export LH Stg	94900001A
Export CKD LH Stg	94500001A	Export CKD LH Stg	95000001A

1 TON MODELS

109 2¼ Litre Petrol		109 2.6 Litre Petrol	
Home	24600001A	Home	26600001A
Export RH Stg	24700001A	Export RH Stg	26700001A
Export CKD RH Stg	24800001A	Export CKD RH Stg	26800001A
Export LH Stg	24900001A	Export LH Stg	26900001A
Export CKD LH Stg	25000001A	Export CKD LH Stg	27000001A

SERIES III LAND ROVER VEHICLE IDENTIFICATION NUMBERS FROM NOVEMBER 1979 ONWARDS

2¼ LITRE PETROL MODELS

88		109	
Home RH Stg	LBAAH1AA100001	Home RH Stg	LBCAH1AA100001
Export RH Stg	LBAAH1AA100001	Export RH Stg	LBCAH1AA100001
Export CKD RH Stg	LBAAH1AF500001	Export CKD RH Stg	LBCAH1AF500001
Export LH Stg	LBAHH2AA100001	Export LH Stg	LBCAH2AA100001
Export CKD LH Stg	LBAAH2AF500001	Export CKD LH Stg	LBCAH2AF500001

88 Station Wagon		109 Station Wagon	
Home RH Stg	LBABH1AA100001	Home RH Stg	LBCMH1AA100001
Export RH Stg	LBABH1AA100001	Export RH Stg	LBCMH1AA100001
Export CKD RH Stg	LBABH1AF500001	Export CKD RH Stg	LBCMH1AF500001
Export LH Stg	LBABH2AA100001	Export LH Stg	LBCMH2AA100001
Export CKD LH Stg	LBABH2AF500001	Export CKD LH Stg	LBCMH2AF500001

2¼ LITRE DIESEL MODELS

88		109	
Home RH Stg	LBAAG1AA100001	Home RH Stg	LBCAG1AA100001
Export RH Stg	LBAAG1AA100001	Export RH Stg	LBCAG1AA100001
Export CKD RH Stg	LBAAG1AF500001	Export CKD RH Stg	LBCAG1AF500001
Export LH Stg	LBAAG2AA100001	Export LH Stg	LBCAG2AA100001
Export CKD LH Stg	LBAAG2AF500001	Export CKD LH Stg	LBCAG2AF500001

88 Station Wagon		109 Station Wagon	
Home RH Stg	LBABG1AA100001	Home RH Stg	LBCMG1AA100001
Export RH Stg	LBABG1AA100001	Export RH Stg	LBCMG1AA100001
Export CKD RH Stg	LBABG1AF500001	Export CKD RH Stg	LBCMG1AF500001
Export LH Stg	LBABG2AA100001	Export LH Stg	LBCMG2AA100001
Export CKD LH Stg	LBABG2AF500001	Export CKD LH Stg	LBCMG2AF500001

2.6 LITRE PETROL

109		109 Station Wagon	
Home RH Stg	LBCAP1AA100001	Home RH Stg	LBCMP1AA100001
Export RH Stg	LBCAP1AA100001	Export RH Stg	LBCMP1AA100001
Export CKD RH Stg	LBCAP1AF500001	Export CKD RH Stg	LBCMP1AF500001
Export LH Stg	LBCAP2AA100001	Export LH Stg	LBCMP2AA100001
Export CKD LH Stg	LBCAP2AF500001	Export CKD LH Stg	LBCMP2AF500001

1 TON MODELS

109 2¼ Litre Petrol		109 2.6 Litre Petrol	
Home RH Stg	LBDAH1AA100001	Home RH Stg	LBDAP1AA100001
Export RH Stg	LBDAH1AA100001	Export RH Stg	LBDAP1AA100001
Export CKD RH Stg	LBDAH1AF500001	Export CKD RH Stg	LBDAP1AF500001
Export LH Stg	LBDAH2AA100001	Export LH Stg	LBDAP2AA100001
Export CKD LH Stg	LBDAH2AF500001	Export CKD LH Stg	LBDAP2AF500001

GROUP A
COMMENCING VEHICLE IDENTIFICATION NUMBERS 109 V8 LAND ROVER

VEHICLE 109 V8			VEHICLE 109 V8 STATION WAGON		
Home	RH Stg	LBCAV1AA100001	Home	RH Stg	LBCMV1AA100001
Export	RH Stg	LBCAV1AA100001	Export	RH Stg	LBCMV1AA100001
CKD	RH Stg	LBCAV1AF100001	CKD	RH Stg	LBCMV1AF100001
Export	LH Stg	LBCAV2AA100001	Export	LH Stg	LBCMV2AA100001
CKD	LH Stg	LBCAV2AF100001	CKD	LH Stg	LBCMV2AF100001

	ENGINE	GEARBOX	FRONT AXLE	REAR AXLE
Non-Detoxed	10G00001			
Detoxed	11G00001	88100001	88100001 RH Stg 88400001 LH Stg	Salisbury number
Australia Detoxed	12G00001			

KEY BLANK CROSS REFERENCE CHART

KEY SERIES	CODES:	LOCK MANUFACTURER	KEY BLANK PART No.
CONVENTIONAL KEYS:			
BC	301 – 360	LOWE & FLETCHER	CZK 3438
FK	876 – 955	WILMOT BREEDEN	17H 2475
FP	626 – 750	WILMOT BREEDEN	AKA 463
FR	751 – 875	WILMOT BREEDEN	37H 7189
FS	001 – 099, 876 – 955	WILMOT BREEDEN	17H 2475
FT	101 – 225, 301 – 360	WILMOT BREEDEN	CZK 3438
TS	300 – 369	STREBOR	37H 4557
NP	0001 – 1000	NEIMAN	BAU 1849
STEERING LOCK TYPE KEYS:			
B	001 – 1000	BRITAX	37H 7194
B	001 – 1000	BRITAX	37H 7195*
BL RO.VV.VL.	1001N – 2000N	LOWE & FLETCHER	AAU 8276
BP	001 – 1000	BRITAX	37H 7194
BP	001 – 1000	BRITAX	37H 7195*
D	1 – 64	BRITAX	RTC 817B
FH (LONG TIP)	1 – 3948	WASO	37H 7192
FH	1 – 3948	WASO	37H 7193
FR	1 – 1080	WASO	37H 7193
L & F	17001 – 18000	BRITAX	37H 7197
L & F	86001 – 88000	BRITAX	37H 7197
LR	001 – 1000	BRITAX	37H 7194
LR	001 – 1000	BRITAX	37H 7195*
NH	2001 – 3000	WILMOT BREEDEN	37H 6108
NJ	001 – 1500	WILMOT BREEDEN	37H 1494
TM	3001 – 4000	C. E. MARSHALL	37H 8689
A	11225 – 53332	MAGNATEX	27H 9391
NO SERIES LETTER	2001 – 3000	NEIMAN	37H 7190
NO SERIES LETTER	7001 – 9000	NEIMAN	AAU 1888
NO SERIES LETTER (Collapsable Head)	7001 – 9000	NEIMAN	BAU 1921

*PRE CUT No. 3 DEPTH FIRST CUT BLANK.

INTRODUCTION

REPERTOIRES

Le catalogue comporte un certain nombre de répertoires en facilitant la consultation.

1. Répertoire illustré — Il consiste en de petites illustrations correspondant chacune à un groupe de pièces. Face au groupe on trouve les numéros des première et dernière page sur lesquelles figurent les pièces.

2. Répertoire alphabétique — Il donne des nomenclatures de toutes les pièces principales du véhicule, par ordre alphabétique, et le numéro de la page à laquelle on trouvera la pièce.

3. Répertoire numérique — Il donne en fin des nomenclatures du catalogue toutes les pièces de rechange par ordre numérique, ainsi que la désignation complète de la pièce et le numéro de la première page à laquelle elle se trouve.

DISPOSITION

Le catalogue représente toutes les pièces, ensembles ou pochettes de réparation qui se font pour le véhicule, et il donne directement le numéro de la pièce à la page des illustrations. La quantité pour tout numéro de pièce est toujours une, à moins qu'une autre quantité ne soit indiquée en parenthèses à côté du numéro de pièce. Si une pièce n'a pas son propre numéro c'est qu'elle ne se fait pas séparément. Dans ce cas il faut monter sur le véhicule l'ensemble ou kit. Les numéros de pièce indiqués à toutes les illustrations sont communs à tous les modèles concernés par la publication sauf indication contraire à côte de l'entête, du numéro de la pièce, ou à la partie au bas de l'illustration. Lorsqu'il y a deux numéros de pièce à côté d'une pièce, le deuxième étant entre parenthèses, cela veut dire que la pièce dont le numéro est entre parenthèses est une pièce antérieure, qui a été remplacée.

Il est demandé aux utilisateurs du catalogue de se familiariser avec les divers symboles et abréviations utilisés tout au long du catalogue, et aussi avec les abréviations des pays, pour les pièces destinées à un marché particulier.

COMMANDES

Pour commander des pièces de réchange il est essentiel de se conformer aux règles suivantes:

1. Toujours indiquer le numéro de la pièce tout entier, y compris toutes lettres ou chiffres, préfixes ou suffixes.

2. Toujours indiquer la quantité requise, ne pas oublier que les quantités indiquées sont celles requises pour l'utilisation qui est illustrée. Parfois les pièces sont conditionnées par quantités minimales et il est possible dans ce cas qu'il y ait plus de pièces que nécessaire pour une intervention particulière. On trouvera au barême des renseignements sur les pièces vendues par quantité.

3. Lorsqu'un changement est indiqué pour un véhicule, un moteur, une boîte de vitesses ou un essieu, vérifier soigneusement qu'on commande la pièce portant le bon numéro.

4. Le fait qu'une pièce figure à la nomenclature ne veut pas forcément dire qu'elle soit disponible.

BL Cars Limited a pour principe de procéder sans cesse à des développements et perfectionnements, et se réserve donc le droit d'apporter des changements aux caractéristiques sans préavis.

EINLEITUNG

INDEX-VERZEICHNISSE

In diesem Katalog sind eine Reihe von Index-Verzeichnissen zur leichten Bezugnahme vorgesehen.

1. Bildindex: Dieser Bildindex besteht aus einer Reihe von kleinen Abbildungen, die sich jeweils auf eine gewisse Bauteilgruppe beziehen. Zu jeder Gruppe gehören die Anfangs- und Endseitennummern, auf der die abgebildeten Teile zu finden sind.

2. Alphabetischer Index: Auf diesem Index erscheinen alle Hauptteile des Fahrzeugs in alphabetischer Reihenfolge und die Seitenzahl, auf der diese Bauteile zu finden sind.

3. Numerischer Index: Dieser Index am Ende der Kataloglisten zeigt alle Serviceteile in numerischer Reihenfolge und eine ausführliche Beschreibung des Bauteils, weiterhin die erste Seitenzahl, auf der es erscheint.

AUSLEGUNG

Der Katalog zeigt alle Teile, Einheiten und Reparatursätze, die für das Fahrzeug erhältlich sind, und gibt die Teilnummer direkt auf der Abbildungsseite an. Die Anzahl für alle Teilnummern ist immer **ein** Stück, wenn keine höhere Menge in Klammern bei der Teilnummer angegeben ist. Wenn ein Bauteil keine selbständige Teilnummer zeigt, kann es nicht separat geliefert werden. In solchen Fällen muß die ganze Einheit oder der gesamte Satz im Fahrzeug vorgesehen werden. Auf Abbildungen angegebene Teilnummern sind für alle Modelle gültig, auf die sich diese Veröffentlichung bezieht, wenn es Uberschrift, Teilnummer oder Abschnitt unten auf der Abbildung nicht anders angeben. Wenn ein Teil mit zwei Teilnummern versehen ist (zweite Zahl in Klammern), so weist diese Tatsache darauf hin, daß ein neueres Teilmodell existiert. Die Zahl in Klammern stellt die frühere Teilnummer dar.

Leser dieses Katalogs lernen am besten die verschiedenen Standardsymbole und Abkürzungen, die überall im Katalog verwendet werden, kennen. Außerdem sind die Länderabkürzungen nützlich, die für Teile eines bestimmten Marktes gelten.

BESTELLUNG

Bei der Bestellung von Ersatzteilen ist es erforderlich, die folgenden Punkte zu beachten:

1. Immer komplette Teilnummer mit Präfix- und Suffix-Buchstaben oder -Nummern angeben.

2. Niemals Mengenangabe vergessen. Es werden immer die Mengen abgebildet, die in der gezeigten Anwendung benötigt werden. Manchmal sind nur Mindestmengen erhältlich. Dabei kann es sich um zahlenmäßig größere Teile handeln, als sie für eine Arbeit erforderlich sind. Einzelheiten über abgepackte Mengen sind auf der Einzelteilpreisliste zu finden.

3. Wenn für ein Fahrzeug, einen Motor, ein Getriebe oder eine Achse ein Änderungspunkt gezeigt wird, sorgfältig überprüfen, daß das korrekte Einzelteil mit der richtigen Nummer bestellt wird.

4. Eine Abbildung oder Aufführung eines bestimmten Bauteils ist keine Garantie für die Lieferfähigkeit des Artikels.

BL Cars Limited ist ständig damit beschäftigt, seine Produkte zu verbessern und weiterzuentwickeln. Änderungen ohne vorherige Mitteilung sind daher vorbehalten.

EINLEITUNG

INDEX-VERZEICHNISSE

In diesem Katalog sind eine Reihe von Index-Verzeichnissen zur leichten Bezugnahme vorgesehen.

1. Bildindex: Dieser Bildindex besteht aus einer Reihe von kleinen Abbildungen, die sich jeweils auf eine gewisse Bauteilgruppe beziehen. Zu jeder Gruppe gehören die Anfangs- und Endseitennummern, auf der die abgebildeten Teile zu finden sind.

2. Alphabetischer Index: Auf diesem Index erscheinen alle Hauptteile des Fahrzeugs in alphabetischer Reihenfolge und die Seitenzahl, auf der diese Bauteile zu finden sind.

3. Numerischer Index: Dieser Index am Ende der Kataloglisten zeigt alle Serviceteile in numerischer Reihenfolge und eine ausführliche Beschreibung des Bauteils, weiterhin die erste Seitenzahl, auf der es erscheint.

AUSLEGUNG

Der Katalog zeigt alle Teile, Einheiten und Reparatursätze, die für das Fahrzeug erhältlich sind, und gibt die Teilnummer direkt auf der Abbildungsseite an. Die Anzahl für alle Teilnummern ist immer **ein** Stück, wenn keine höhere Menge in Klammern bei der Teilnummer angegeben ist. Wenn ein Bauteil keine selbständige Teilnummer zeigt, kann es nicht separat geliefert werden. In solchen Fällen muß die ganze Einheit oder der gesamte Satz im Fahrzeug vorgesehen werden. Auf Abbildungen angegebene Teilnummern sind für alle Modelle gültig, auf die sich diese Veröffentlichung bezieht, wenn es Uberschrift, Teilnummer oder Abschnitt unten auf der Abbildung nicht anders angeben. Wenn ein Teil mit zwei Teilnummern versehen ist (zweite Zahl in Klammern), so weist diese Tatsache darauf hin, daß ein neueres Teilmodell existiert. Die Zahl in Klammern stellt die frühere Teilnummer dar.

Leser dieses Katalogs lernen am besten die verschiedenen Standardsymbole und Abkürzungen, die überall im Katalog verwendet werden, kennen. Außerdem sind die Länderabkürzungen nützlich, die für Teile eines bestimmten Marktes gelten.

BESTELLUNG

Bei der Bestellung von Ersatzteilen ist es erforderlich, die folgenden Punkte zu beachten:

1. Immer komplette Teilnummer mit Präfix- und Suffix-Buchstaben oder -Nummern angeben.

2. Niemals Mengenangabe vergessen. Es werden immer die Mengen abgebildet, die in der gezeigten Anwendung benötigt werden. Manchmal sind nur Mindestmengen erhältlich. Dabei kann es sich um zahlenmäßig größere Teile handeln, als sie für eine Arbeit erforderlich sind. Einzelheiten über abgepackte Mengen sind auf der Einzelteilpreisliste zu finden.

3. Wenn für ein Fahrzeug, einen Motor, ein Getriebe oder eine Achse ein Änderungspunkt gezeigt wird, sorgfältig überprüfen, daß das korrekte Einzelteil mit der richtigen Nummer bestellt wird.

4. Eine Abbildung oder Aufführung eines bestimmten Bauteils ist keine Garantie für die Lieferfähigkeit des Artikels.

BL Cars Limited ist ständig damit beschäftigt, seine Produkte zu verbessern und weiterzuentwickeln. Änderungen ohne vorherige Mitteilung sind daher vorbehalten.

SYMBOLS

Right Hand Steering

Left Hand Steering

Right Hand

Left Hand

Safety Item

Exhaust Emission

Not Exhaust Emission

Denotes parts fitted up to serial number(s) shown below.

Indicates parts fitted from a serial number(s) up to another serial number(s).

Denotes parts fitted from a serial number(s) onwards.

Refer to note at foot of page.

Refers to associated page or indicates part or assembly to which item connects.

Represents location of details.

513802

Encloses parts which form an assembly or kit.

Indicates connecting items when these are not illustrated in their true relationship.

STANDARD ABBREVIATIONS

1st, 2nd, 3rd, 4th, 5th	On or adjacent to gears
A/C	Air Conditioning
A/R	As required.
Assy.	Assembly
Auto.	Automatic Gearbox
Carb.	Carburetter models
CKD	Completely knocked down
C/R	Compression ratio
g	Grammes
LWB	Long Wheel Base models
NLS	No Longer Serviced
NSS	Not Supplied Separately
O/D	Overdrive
PAS	Power Assisted Steering
PeInj.	Petrol injection models
S/D	Order on Service Division
SOO	Special Order
SS	Selected Sizes
SWB	Short Wheel Base Models
12.75"	Lengths in inches

COUNTRY ABBREVIATIONS

A	Austria
AUS	Australia
B	Belgium
CDN	Canada
CH	Switzerland
CI	Ivory Coast
D	Germany
DK	Denmark
DZ	Algeria
E	Spain
EEC	Common Market Countries
F	France
GB	United Kingdom
I	Italy
J	Japan
L	Luxembourg
MA	Morocco
N	Norway
NZ	New Zealand
P	Portugal
S	Sweden
SF	Finland
SN	Senegal
TN	Tunisia
USA	United States of America
VN	Vietnam

SYMBOLES

- Conduite à droite
- Conduite à gauche
- Droit
- Gauche
- Pièce de sécurité
- Anti-pollution gaz d'échappement
- Pas anti-pollution gaz d'échappement

- Pièces montées jusqu'aux numéros de série ci-dessous
- Pièces montées d'un/de numéro(s) de série à un autre/d'autres numéro (s) de série
- Pièces montées à partir d'un/de numéro(s) de série
- Voir note au bas de la page
- Voir autre page, ou indique une pièce ou ensemble sur laquelle/ lequel la pièce en question est branchée

Indique l'emplacement des détails

513802

Encadre les pièces formant un ensemble ou kit

Indique des pièces reliées entre elles si l'illustration n'indique pas leur vrai rapport

ABBREVIATIONS STANDARD

1st, 2nd, 3rd, 4th, 5th	Sur les engrenages ou à côté
A/C	Climatisation
A/R	Selon besoins
Assy	Ensemble
Auto	Boîte de vitesses automatique
Carb	Modèles à carburateur
CKD	Complètement démonté
C/R	Taxu de compression
g	Grammes
LWB	Empattement long
NLS	Ne se fait plus
NSS	Non fournie séparément
O/D	Surmultiplication
PAS	Direction assistée
PeInj	Injection d'essence
S/D	Commander auprès Division Service
SOO	Commande spéciale
SS	Tailles spéciales
SWB	Empattement court
12.75"	Longueurs en pouces

ABBREVIATIONS DES PAYS

A	Autriche
AUS	Australie
B	Belgique
CDN	Canada
CH	Suisse
CI	Côte d'Ivoire
D	Allemagne
DK	Danemark
DZ	Algérie
E	Espagne
EEC	Pays du Marché Commun
F	France
GB	Royaume-Uni
I	Italie
J	Japon
L	Luxembourg
MA	Maroc
N	Norvège
NZ	Nouvelle-Zélande
P	Portugal
S	Suède
SF	Finlande
SN	Sénégal
TN	Tunisie
USA	Etats-Unis d'Amérique
VN	Vietnam

SYMBOLE

Lenkung rechts

Linkung links

Rechts

Links

Sicherheitsteil

Abgase

Nichtabgase

Weist auf Teile hin, die bis Seriennummer(n) – siehe unten – montiert werden.

Weist auf Teile hin, die von einer Seriennummer bis zu einer anderen Seriennummer montiert werden.

Weist auf Teile hin, die von einer Seriennummer an montiert werden.

Weist auf Fußnote hin.

Weist auf eine damit zusammenhängende Seite hin oder zeigt Bauteile oder Einheiten, mit denen dieses Bauteil verbunden ist.

Weist auf Stelle mit Details hin.

513802

Zeigt Teile, die zu einer kompletten Einheit oder einem gesamten Bausatz gehören.

Zeigt Verbindungsteile, die hier nicht in ihrer korrekten Anordnung gezeigt werden.

STANDARDMASSIGE ABKURZUNGEN

1st, 2nd, 3rd, 4th, 5th	An oder in der Nähe von Gängen
A/C	Klimaanlage
A/R	Wie erforderlich
Assy.	Komplette Einheit
Auto.	Automatisches Getriebe
Carb.	Vergasermodelle
CKD	Vollkommen zerlegt
C/R	Verdichtungsverhältnis
g	Gramm
LWB	Modelle mit großem Achsabstand
NLS	Nicht mehr im Service
NSS	Nicht getrennt lieferbar
O/D	Overdrive
PAS	Servolenkung
PeInj.	Modelle mit Benzineinspritzung
S/D	Auftrag/Service Division
SOO	Spezialauftrag
SS	Ausgewählte Größen
SWB	Modelle mit kurzem Achsabstand
12.75"	Länge in Zoll

LANDERABKURZUNGEN

A	Österreich
AUS	Australien
B	Belgien
CDN	Kanada
CH	Schweiz
CI	Elfenbeinküste
D	Deutschland
DK	Dänemark
DZ	Algerien
E	Spanien
EEC	EG-Länder
F	Frankreich
GB	Großbritannien
I	Italien
J	Japan
L	Luxemburg
MA	Marokko
N	Norwegen
NZ	Neuseeland
P	Portugal
S	Schweden
SF	Finnland
SN	Senegal
TN	Tunesien
USA	USA
VN	Vietnam

PICTORIAL INDEX, TABLE DES MATIERES ILLUSTREE, VERZEICHNIS DER ABBILDUNGEN.

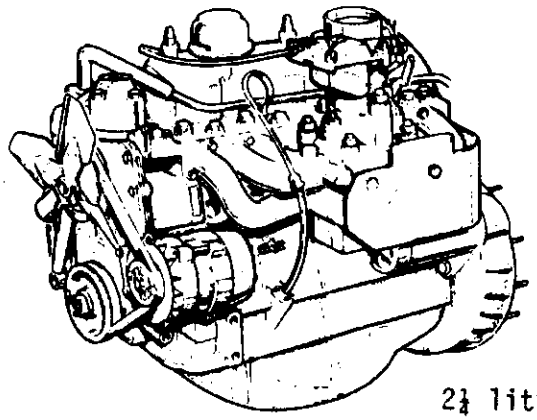

1C 02
to
1C 14

2¼ litre Petrol

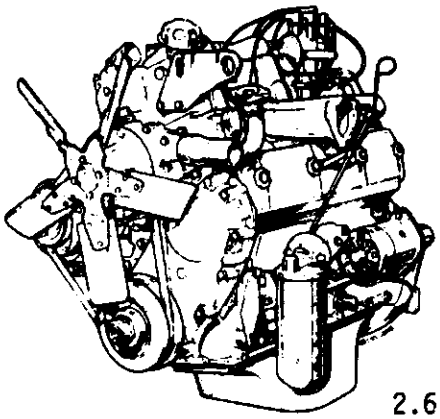

1D 02
to
1D 15

2.6. litre Petrol

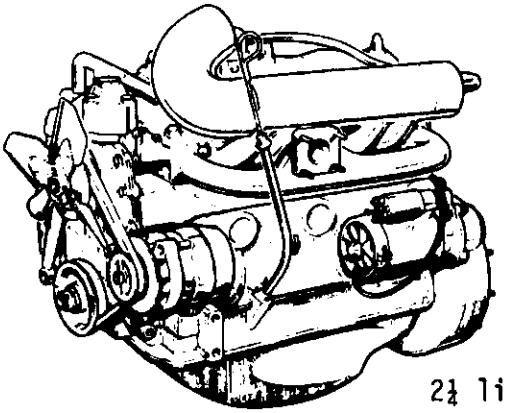

1E 02
to
1E 13

2¼ litre Diesel

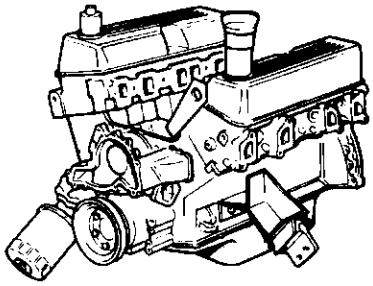

1F 02
to
1F 12

V8 Petrol

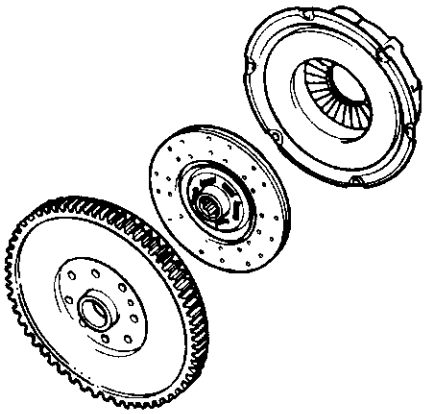

1G 02
to
1G 05

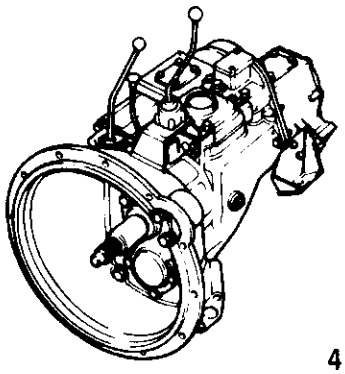

1H 02
to
1H 13

4 and 6 Cylinder

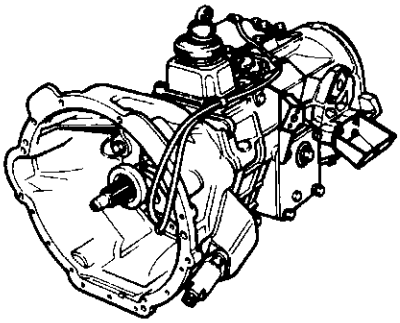

1I 02
to
1I 14

V8 Petrol

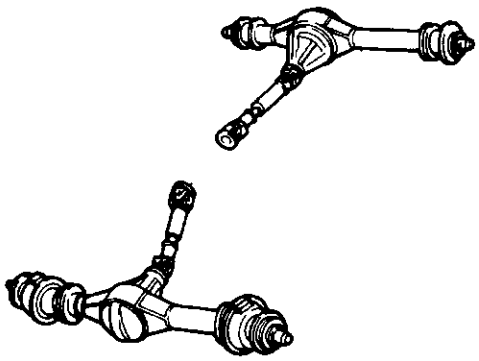

1J 02
to
1J 14

PICTORIAL INDEX, TABLE DES MATIERES ILLUSTREE, VERZEICHNIS DER ABBILDUNGEN.

GROUP A

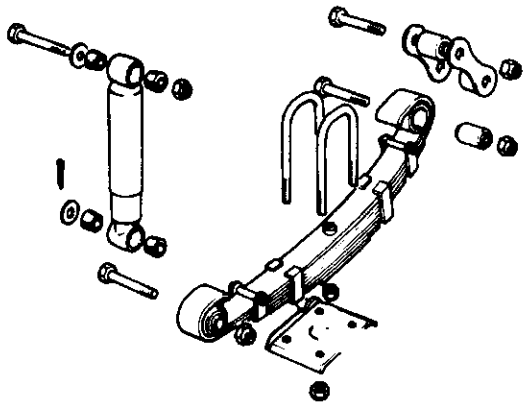

1J 15
to
1J 18

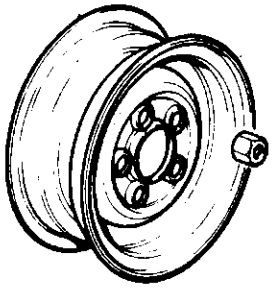

1J 18

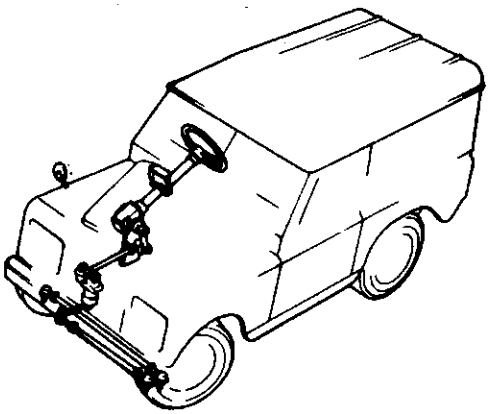

1K 02
to
1K 08

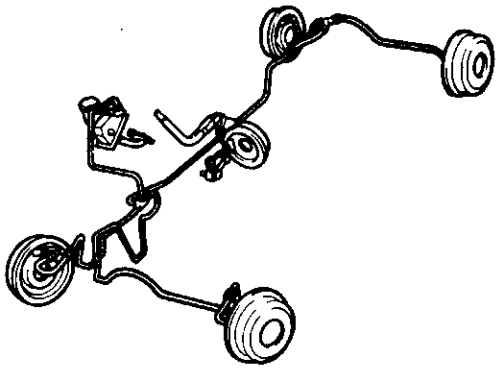

1L 02
to
1L 16

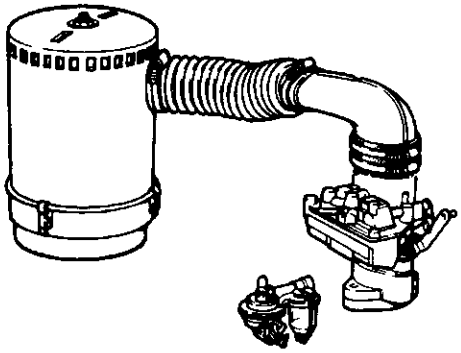

1M 02
to
1M 12

1N 02
to
1N 06

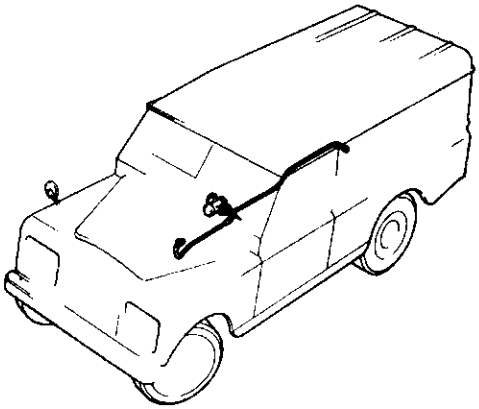

1N 07
to
1N 09

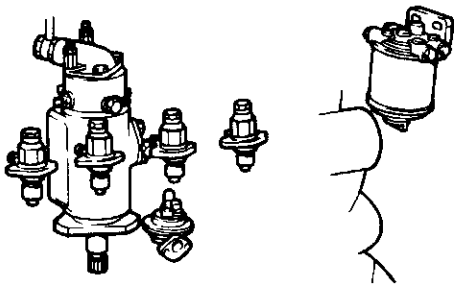

1N 10

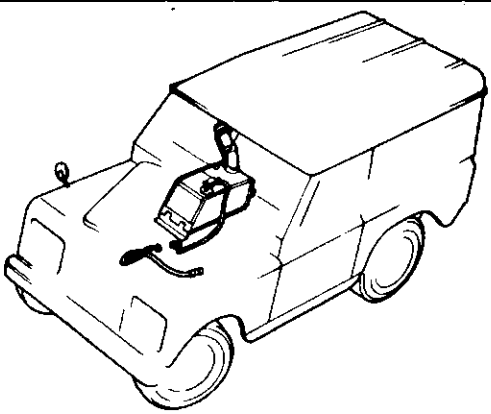

1N 11
to
1N 17

10 02
to
10 06

GROUP A

PICTORIAL INDEX, TABLE DES MATIERES ILLUSTREE, VERZEICHNIS DER ABBILDUNGEN.

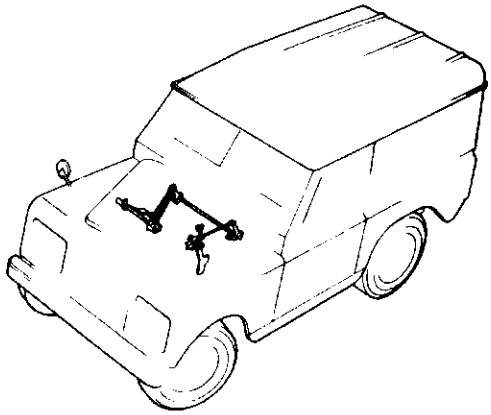

10 07
to
10 14

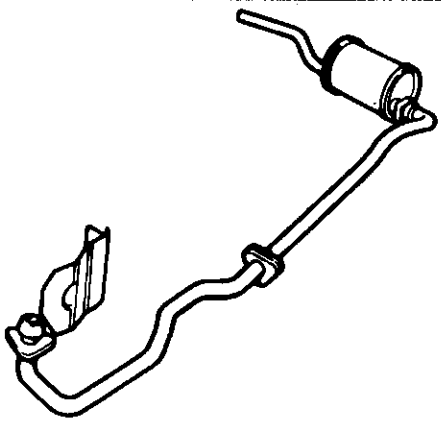

2C 02
to
2C 11

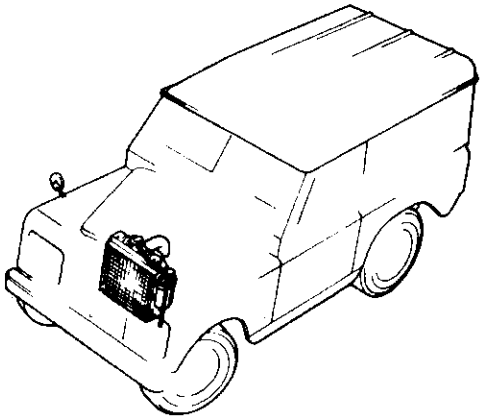

2D 02
to
2D 04

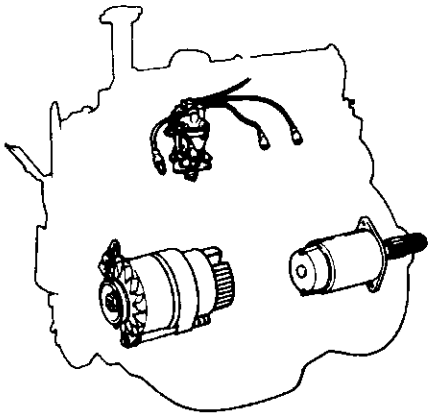

2E 02
to
2E 16

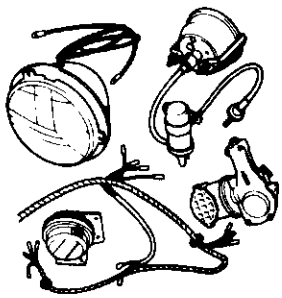

2F 02
to
2F 15

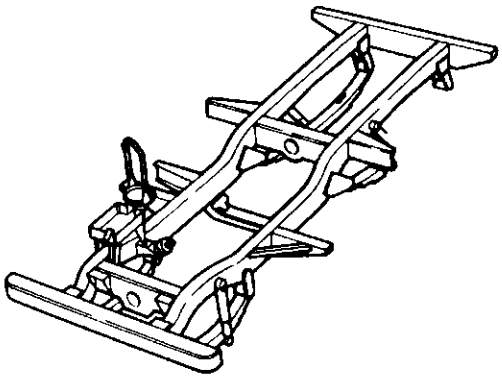

2G 02
to
2G 04

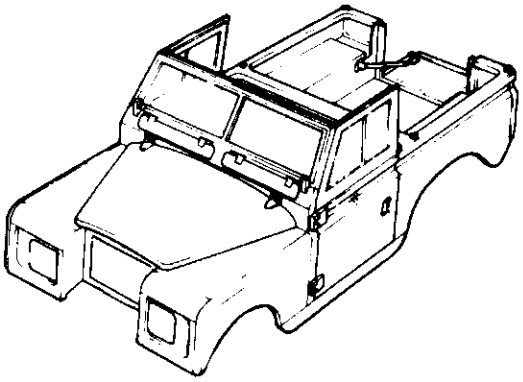

2G 05
to
2G 16
2H 02
to
2H 06
2H 09
to
2H 14
2I 03
to
2I 04

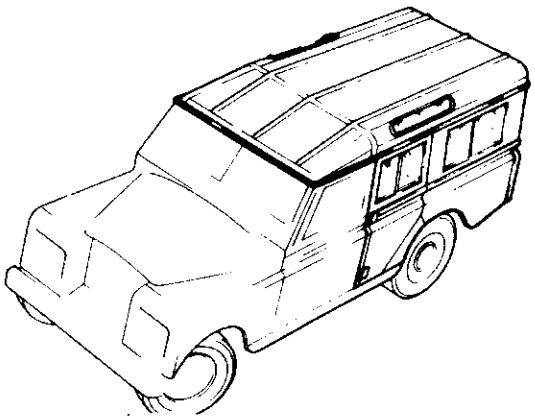

2G 17
to
2G 18
2H 07
to
2H 09
2H 15
to
2H 18
2I 02

PICTORIAL INDEX, TABLE DES MATIERES ILLUSTREE, VERZEICHNIS DER ABBILDUNGEN.

GROUP A

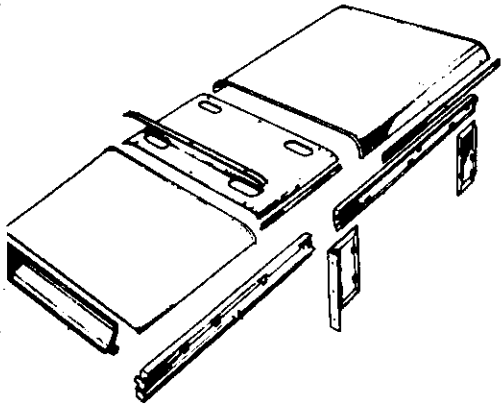

2J 06
to
2J 07

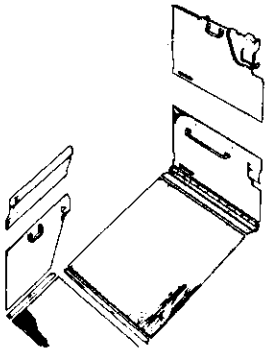

2J 08

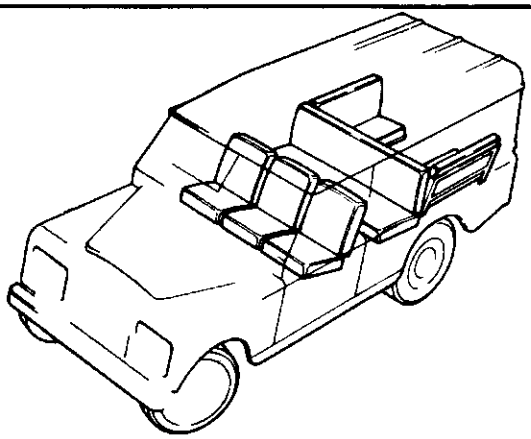

2J 09
to
2J 16
2K 02
to
2K 09

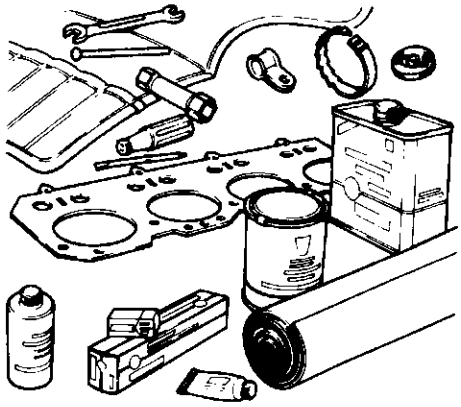

2L 02
to
2L 11

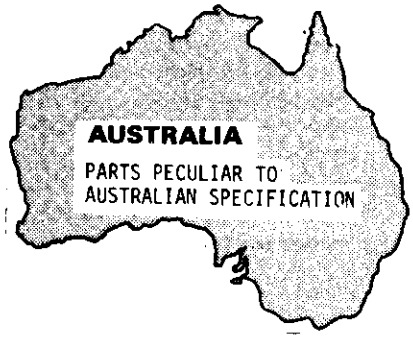

2L 12
to
2L 18

ALPHABETICAL INDEX

Description	Page No
'A'	
Accelerator bell crank, 2¼ Petrol	10 08
Accelerator, cable operated, 2¼ Diesel	10 12
Accelerator control rod 2¼ Petrol	10 08
Accelerator cross shaft 2¼ Petrol	10 07
Accelerator cross shaft 2¼ Diesel	10 11
Accelerator cross shaft and lever, 2.6 Petrol	10 10
Accelerator extension shaft and lever, 2.6 Petrol	10 10
Accelerator pedal, 2¼ Petrol	10 07
Accelerator pedal, 2.6 Petrol	10 09
Accelerator pedal, 2¼ Diesel	10 11
Accelerator pedal 109 V8	10 13
Accelerator pedal shaft, 2¼ Petrol	10 07
Accelerator pedal shaft, 2.6 Petrol	10 09
Accelerator pedal shaft, 2¼ Diesel	10 11
Accelerator, control rod, 2¼ Diesel	10 12
Adaptor, carburetter, 2.6 Petrol	1M 05
Adaptor - engine oil filter 2.6 Petrol	1D 13
Adaptor - water pump, 2.6 Petrol	1D 10
Adjusting brackets, air pump 2.6 Petrol	1D 14
Air cleaner, 2¼ Petrol	1N 02
Air cleaner, 2.6 Petrol	1N 02
Air cleaner, 2¼ Diesel	1N 03
Air cleaner support	2G 04
Air cleaner - detoxed 109 V8	1N 05-6
Air cleaner - non - detoxed 109 V8	1N 04
Air injection pump, 2.6 Petrol	1D 14
Air intake elbow - detoxed	1N 05
Air intake elbow - non - detoxed	1N 04
Air manifold, 2.6 Petrol	1D 14
Air pipe, carburetter 2.6 Petrol	1M 07 1M 08
Air pipe, fuel trap, 2.6 Petrol	1M 08
Air tube, 2.6 Petrol	1D 14
Alternator - 16 ACR 2¼ Petrol machine sensed. Engine suffix 'A'	2E 10
Alternator - 16 ACR 2¼ Diesel, machine sensed. Engine suffix 'A'	2E 14
Alternator - 16 ACR 2¼ Petrol, battery sensed. Engine suffix 'B' onwards.	2E 10
Alternator - 16 ACR 2¼ Diesel battery sensed. Engine suffix 'B' onwards	2E 14
Alternator - 16 ACR 2.6 Petrol, machine sensed. Engine suffix 'A'	2E 12
Alternator - 16 ACR 2.6 Petrol, battery sensed. Engine suffix 'B' onwards.	2E 12

Description	Page No
'A' - continued	
Alternator - 18 ACR 109 V8	2E 16
Alternator fixings, 2¼ Petrol	2E 11
Alternator fixings, 2.6 Petrol	2E 13
Alternator fixings, 2¼ Diesel	2E 15
Alternator fixings, 109 V8	2E 16
Alternator mounting brackets 2.6 Petrol	2E 13
Anchor bracket, air pump, 2.6 Petrol	1D 14
Anchorages, seat belts	2J 15-16
Anti-noise rubbers	2I 04
Audible warning, safety harness, (Electrical).	2F 14
Australian conditions	2L 12-18
Auxiliary Driving Lamps	2F 02
Axle front. 88" and 109" except 1 ton	1J 02
Axle front, 109" 1 ton	1J 03
Axle front 109 V8	1J 02
Axle rear, 88" and 109	1J 12
Axle rear, 109 V8	1J 12
'B'	
Badge - Land Rover 109 V8	2H 06
Ball joint assembly	1K 06-08
Ballast resistor, Diesel models	2F 09
Battery base 109 V8	2G 12
Battery and cables, Petrol models	2F 12
Battery and cables, Diesel models	2F 12
Battery support	2G 04
Bearings, camshaft 2¼ Petrol	1C 05
Bearings, camshaft 2.6 Petrol	1D 06
Bearings, camshaft 2¼ Diesel	1E 05
Bearings, connecting rod, 2¼ Petrol	1C 03
Bearings, connecting rod, 2.6 Petrol	1D 04
Bearings, connecting rod, 2¼ Diesel	1E 03
Bearings connecting rod 109 V8	1F 04
Bearings, front and rear hub 88"	1J 10
Bearings, front hub 109"	1J 10
Bearings, front output shaft except 109 V8	1H 10
Bearings, front output shaft 109 V8	1I 10
Bearings, gearbox layshaft except 109 V8	1H 05
Bearings, gearbox layshaft 109 V8	1I 09
Bearings, gearbox mainshaft except 109 V8	1H 04
Bearings, gearbox mainshaft 109 V8	1I 06
Bearing kits 16 ACR alternator 2¼ Petrol	2E 10
Bearing kits 16 ACR alternator 2.6 Petrol	2E 12
Bearing kits 16 ACR alternator 2¼ Diesel	2E 14
Bearing kit - alternator 18 ACR 109 V8	2E 16

Description	Page No
'B' - continued	
Bearings, main crankshaft, 2¼ Petrol	1C 03
Bearings, main crankshaft, 2.6 Petrol	1D 04
Bearings, main crankshaft, 2¼ Diesel	1E 03
Bearings, main crankshaft 109 V8	1F 03
Bearing, primary pinion except V8	1H 04
Bearing, primary pinion 109 V8	1I 06
Bearing, mainshaft bearing housing rear	1H 09
Bearing, rear mainshaft 109 V8	1I 04
Bearing, rear hub 109"	1J 13
Bearing, swivel pin housing	1J 06
Bell housing, except 109 V8	1H 02
Bell housing 109 V8	1I 02
Body cappings 88"	2H 03
Body cappings, 109' except Station Wagon	2H 06
Body cappings, 109" Station Wagon	2H 08
Bodysides, H.C.P.U.	2H 11
Bolt kit, starter motor 2¼ Petrol	2E 07
Bolt kit, starter motor 2.6 Petrol	2E 08
Bolt kit, starter motor 2¼ Diesel	2E 09
Body, oil pump, 2.6 Petrol	1D 05
Bonnet	2G 06
Bonnet 109 V8	2G 06
Bonnet catch assembly	2G 06
Bonnet catch 109 V8	2G 06
Bonnet pad	2I 04
Bottom cover - bell housing 109 V8	1I 03
Bottom cover, transfer box 109 V8	1I 04
Brake Adjuster kit - drum brakes	1L 02 1L 04
Brake anchor plate, front	1L 02& 1L 03
Brake anchor plate, rear	1L 02& 1L 04
Brake drum, front	1L 02& 1L 03
Brake drum, rear,	1L 02& 1L 04
Brake failure warning, dual brakes	2F 13
Brake grease	2L 07
Brake pedal	1L 06
Brake pipes, front and rear	1L 09 1L 13
Brake pipes 109 V8	1L 12& 1L 13
Brake rubber grease	2L 07
Brake shoe, front	1L 02& 1L 03
Brake shoe, rear	1L 02 1L 04
Breather filter 2¼ Petrol	1C 11
Breather filter, 2.6 Petrol	1D 12
Breather filter, 2¼ Diesel	1E 12
Breather filter 109 V8	1N 04
Breather pipe, gearbox 109 V8	1I 05
Brush kit, wiper motor	2F 06

Description	Page No
'B' - continued	
Brush set, alternator 2¼ Petrol	2E 10
Brush set, alternator 2.6 Petrol	2E 12
Brush set, alternator 2¼ Diesel	2E 14
Brush set - alternator 18ACR 109V8	2E 16
Brush set, starter motor, 2¼ Petrol	2E 07
Brush set, starter motor 2.6 Petrol	2E 08
Brush set, starter motor 2¼ Diesel	2E 09
Brush set, starter motor 109 V8	2E 09
Bulb - headlamp	2F 02
Bumper stops, rear - H.C.P.U.	2H 10
Bush kit, starter, 2¼ Petrol	2E 07
Bush kit, starter motor 2.6 Petrol	2E 08
Bush kit, starter 2¼ Diesel	2E 09
Bushes, front road spring	1J 15-16
Bushes, rear road spring	1J 17-18
Bushes, front shock absorber	1J 16
Bushes, rear shock absorber	1J 16
'C'	
Cable - brake warning	2F 13
Cable - engine harness 109 V8	2F 10
Cable - main harness 109 V8	2F 10
Camshaft, 2¼ Petrol	1C 05
Camshaft, 2.6 Petrol	1D 06
Camshaft, 2¼ Diesel	1E 05
Camshaft - 109 V8	1F 06
Cam roller follower, 2.6 Petrol	1D 08
Carburetter, 2¼ Petrol	1M 02
Carburetters - detoxed and non-detoxed 109 V8	1M 09
Carburetter, 2.6 Petrol	1M 05
Carburetter air rails 109 V8	1M 12
Carburetter, air valve, 2.6 Petrol	1M 05
Carburetter body, 2.6 Petrol	1M 05
Carburetter check valve 109 V8	1M 12
Carburetter, choke spindle and levers, 2¼ Petrol	1M 03
Carburetter, cold start, 2.6 Petrol	1M 06
Carburetter components, 2.6 Petrol	1M 07
Carburetter, damper 2.6 Petrol	1M 05
Carburetter, damper 109 V8	1M 10
Carburetter, emulsion block, 2¼ Petrol	1M 03
Carburetter, float, 2¼ Petrol	1M 03
Carburetter, float, 2.6 Petrol	1M 06
Carburetter float 109 V8	1M 10
Carburetter fixings, 2¼ Petrol	1M 04
Carburetter gasket kit, 2¼ Petrol	1M 02
Carburetter gasket kit, 2.6 Petrol	1M 05
Carburetter gasket kit 109 V8	1M 11
Carburetter, jet orifice, 2.6 Petrol	1M 06
Carburetter linkage 109 V8	1M 12
Carburetter, main body, 2¼ Petrol	1M 02
Carburetter, main jet, 2¼ Petrol	1M 03

Description	Page No
'C' - continued	
Carburetter needle valve pack 2.6 Petrol	1M 08
Carburetter needle valve kit 109 V8	1M 11
Carburetter overhaul kit, 2¼ Petrol	1M 02
Carburetter overhaul kit, 2.6 Petrol	1M 05
Carburetter overhaul kit 109 V8	1M 11
Carburetter, slow running jet 2¼ Petrol	1M 03
Carburetter, throttle levers, 2.6 Petrol	1M 06
Carburetter, throttle valve, 2.6 Petrol	1M 07
Carburetter, top cover, 2¼ Petrol	1M 02
Carburetter, top cover, 2.6 Petrol	1M 05
Centre front seat 109" 12 seater	2K 05
Centre seat assembly, 109" S.W.	2K 04
Chainwheel on camshaft, 2¼ Petrol	1C 05
Chainwheel on camshaft, 2.6 Petrol	1D 06
Chainwheel on camshaft, 2¼ Diesel	1E 05
Chain, camshaft driving, 2¼ Petrol	1C 05
Chain, camshaft driving, 2.6 Petrol	1D 06
Chain, camshaft driving, 2¼ Diesel	1E 05
Chain, camshaft driving, 109 V8	1F 06
Chain tensioner, 2¼ Petrol	1C 05
Chain tensioner, 2.6 Petrol	1D 06
Chain tensioner, 2¼ Diesel	1E 05
Channels, windows front door	2G 14
Channels, windows rear side doors	2G 17
Chassis frame	2G 02
Chassis frame 109 V8	2G 02
Check Strap, front door	2G 16
Check strap, rear door	2I 02
Check strap, rear side door	2G 18
Check valve, air manifold, 2.6 Petrol	1D 14
Choke control 109 V8	1M 09
Clamp - battery 109 V8	2G 04
Cleaning fluid, brake parts	2L 07
Clutch, 2¼ Petrol	1G 02
Clutch, 2.6 Petrol	1G 02
Clutch, 2¼ Diesel	1G 03
Clutch - 109 V8	1G 03
Clutch pedal	1G 04
Clutch pedal bracket	1G 04
Clutch plate, 2¼ Petrol	1G 02
Clutch plate, 2.6 Petrol	1G 02
Clutch Plate, 2¼ Diesel	1G 03
Clutch release bearing and sleeve 109 V8	1G 05
Clutch release lever 109 V8	1G 05
Cluch slave cylinder 109 V8	1G 05
Clutch slave cylinder	1G 05
Clutch slave cylinder overhaul kit	1G 05
Clutch withdrawal mechanism	1G 05
Cold start control, 2¼ Petrol	10 14
Cold start control, 2.6 Petrol	10 14
Condenser, distributor, 2¼ Petrol	2E 02-3
'C' - continued	
Condensor, distributor, 2.6 Petrol	2E 04-5
Condensor - distributor - detoxed 109 V8	2E 06
Condensor - distributor - non-detoxed 109 V8	2E 06
Connecting rod, 2¼ Petrol	1C 03
Connecting rod, 2.6 Petrol	1D 04
Connecting rod, 2¼ Diesel	1E 03
Connecting rod, 109 V8	1F 04
Console Unit	2L 05
Constant velocity joint, 109 V8	1J 05
Contact breaker points, distributor 2¼ Petrol	2E 02-3
Contact breaker points, distributor 2.6 Petrol	2E 04-5
Contact Points - distributor - detoxed 109 V8	2E 06
Contact points - distributor non-detoxed 109 V8	2E 06
Coolant inhibitor	2L 07
Corner capping, tropical roof	2H 17
Corner protector, cantrail, rear	2H 17
Cover - gearbox 109 V8	2G 11
Cover, gearbox oil pump 109 V8	1I 03
Cover panels, front wings	2G 08
Cover panels, rear body, 88"	2H 02
Cover panels, rear body, 109"	2H 05
Cover panels, rear body, 109 S.W.	2H 07
Cover panels, rear lamp	2H 05
Cover plate, side, gearbox 109 V8	1I 04
Cover - spare wheel	2I 02
Cowl, fuel filler - H.C.P.U.	2H 12
Crankshaft, 2¼ Petrol	1C 03
Crankshaft, 2.6 Petrol	1D 04
Crankshaft, 2¼ Diesel	1E 03
Crankshaft, 109 V8	1F 03
Crankshaft oil seal assembly, 2¼ Petrol	1C 03
Crankshaft oil seal and retainer assembly, 2.6 Petrol	1D 04
Crankshaft oil seal assembly, 2¼ Diesel	1E 03
Crankshaft pulley, 2¼ Petrol	1C 03
Crankshaft pulley, 2.6 Petrol	1D 04
Crankshaft pulley, 2¼ Diesel	1E 03
Crankcase sump, 2¼ Petrol	1C 07
Crankcase sump, 2.6 Petrol	1D 08
Crankcase sump, 2¼ Diesel	1E 07-8
Crankcase sump, 109 V8	1F 03
Crossmembers	2G 02
Crownwheel and pinion except 1 ton	1J 08
Crownwheel and pinion 109 1 ton	1J 09
Cylinder block, 2¼ Petrol	1C 02
Cylinder block, 2.6 Petrol	1D 03
Cylinder block, 2¼ Diesel	1E 02
Cylinder block fixings, 2¼ Petrol	1C 02
Cylinder block fixings, 2.6 Petrol	1D 03
Cylinder block fixings, 2¼ Diesel	1E 02

Description	Page No
'C' - continued	
Cylinder block 109 V8	1F 02
Cylinder head, 2¼ Petrol	1C 11
Cylinder head, 2.6 Petrol	1D 11
Cylinder head, 2¼ Diesel	1E 11
Cylinder head fixings, 2¼ Petrol	1C 11
Cylinder head fixings, 2.6 Petrol	1D 12
Cylinder head fixings, 2¼ Diesel	1E 11
Cylinder head gasket, 2¼ Petrol	1C 11
Cylinder head gasket, 2.6 Petrol	1D 12
Cylinder head gasket, 2¼ Diesel	1E 11
Cylinder head 109 V8	1F 09
'D'	
Dash assembly	2G 09
Dash assembly 109 V8	2G 09
Decarb gasket kit 109 V8	1F 12
Decarbonising gasket set, 2¼ Petrol	1C 02
Decarbonising gasket set, 2.6 Petrol	1D 03
Decarbonising gasket set, 2¼ Diesel	1E 02
Differential assembly, 88 front and rear and 109 front except 1 ton	1J 07
Differential assembly, front, 109 1 ton	1J 09
Differential housing, 88 front and rear and 109 front except 1 ton	1J 07
Differential housing, front, 109 1 ton	1J 03
Differential assembly, rear 109"	1J 13
Differential case less gears, front 109 1 ton	1J 09
Differential case less gears, rear 109"	1J 13
Distance piece, air pump 2.6 Petrol	1D 14
Distributor, 2¼ Petrol	2E 02-3
Distributor, 2.6 Petrol	2E 04-5
Distributor - detoxed 109 V8	2E 06
Distributor - non-detoxed 109 V8	2E 06
Distributor pump, 2¼ Diesel	1N 10
Distributor, sundry parts kit, 2¼ Petrol	2E 02
Distributor, sundry parts kit, 2.6 Petrol	2E 04
Distributor suppression cover 2.6 Petrol	2E 04-5
Door casings, 88" S.W.	2J 08
Door casings, 109" S.W.	2J 08
Door mounted mirror	2I 03
Door - rear end 109 V8	2H 18
Drive shaft, oil pump, 2.6 Petrol	1D 05
Driving belt, air pump, 2.6 Petrol	1D 14
'E'	
EGR Valve	1C 14
Electrical, cable cleats, plugs and clips	2L 08
Element, air cleaner, 2¼ Petrol	1N 02
Element, air cleaner, 2.6 Petrol	1N 02
'E' - continued	
Element, air cleaner, 2¼ Diesel	1N 03
Element for fuel filter, 2.6 Petrol	1N 09
Emission control 2¼ Petrol	1C 08-9
Emission pack, carburetter, 2.6 Petrol	1M 08
Engine assembly, 2¼ Petrol	1C 02
Engine assembly, 2.6 Petrol	1D 02-3
Engine assembly, 2¼ Diesel	1E 02
Engine assembly 109 V8	1F 02
Engine breather filter, 2.6 Petrol	1D 09
Engine mounting foot, 2¼ Petrol	1C 02
Engine mounting foot, 2.6 Petrol	1D 03
Engine mounting foot, 2¼ Diesel	1E 02
Engine mountings, 2¼ Petrol	1C 14
Engine mountings, 2.6 Petrol	1D 15
Engine mountings, 2¼ Diesel	1E 13
Engine mountings, 109 V8	1F 02
Engine stop control, 2¼ Diesel	1O 14
Engine tie rod, 2.6 Petrol	1D 15
Exhaust down pipes 109 V8	2C 11
Exhaust gas recirculating valve	2L 12
Exhaust manifold, 2¼ Petrol	1C 13
Exhaust manifold 109 V8	1F 08
Exhaust manifold, 2.6 Petrol	1D 13
Exhaust manifold, 2¼ Diesel	1E 13
Exhaust manifold adaptor, 2.6 Petrol	1D 14
Exhaust valve, 2¼ Petrol	1C 06
Exhaust valve, 2.6 Petrol	1D 07
Exhaust valve, 2¼ Diesel	1E 06
Expansion tank 109 V8	2D 04
Extension bracket, towing - H.C.P.U.	2L 03
'F'	
Fan, 2¼ Petrol	1C 10
Fan, 2.6 Petrol	1D 10
Fan, 2¼ Diesel	1E 09-10
Fan (non-viscous type) 109 V8	1F 11
Fan - viscous drive 109 V8	1F 12
Fan cowl 109 V8	2D 03
Fan belt, 2¼ Petrol	1C 10
Fan belt, 2.6 Petrol	1D 10
Fan belt, 2¼ Diesel	1E 09
Fan belt (non-viscous type) 109 V8	1F 11
Fan pulley (viscous type) 109 V8	1F 12
Fan pulley, 2¼ Petrol	1C 10
Fan pulley, 2.6 Petrol	1D 10
Fan pulley, 2¼ Diesel	1E 09-10
Filler cap, oil filler pipes, 2¼ Petrol	1C 08
Filler cap, oil filler pipes, 2.6 Petrol	1D 08
Filler cap, oil filler pipes, 2¼ Diesel	1E 09
Filter, engine oil, 2¼ Petrol	1C 12
Filter, engine oil, 2.6 Petrol	1D 13
Filter, engine oil, 2¼ Diesel	1E 12
Fixed window front door 109 V8	2G 14

Description	Page No
'F' - continued	
Fixed window - rear side door 109 V8	2G 17
Fixings, roof, 88" S.W.	2H 17
Fixings, roof, 109" S.W.	2H 17
Flame trap 109 V8	1M 12
Flasher lamps	2F 04
Flasher unit	2F 09
Flywheel, 2¼ Petrol	1G 02
Flywheel, 2.6 Petrol	1G 02
Flywheel, 2¼ Diesel	1G 03
Flywheel 109 V8	1G 03
Flywheel housing, 2¼ Petrol	1G 02
Flywheel housing, 2.6 Petrol	1G 02
Flywheel housing, 2¼ Diesel	1G 03
Flyscreen	2G 09
Floor and door trim, 109" S.W.	2J 08
Floor plate 109 V8	2G 11
Fog lamp, rear	2F 05
Frame - rear side door	2G 17
Front apron panel	2G 05
Front bumper	2G 02
Front bumper 109 V8	2G 02
Front cover, 2¼ Petrol	1C 07
Front cover, 2.6 Petrol	1D 09
Front cover, 2¼ Diesel	1E 08
Front cover - engine 109 V8	1F 04
Front cover & oil pump, gearbox 109 V8	1I 03
Front doors	2G 13
Front exhaust pipe, 4 cylinder	2C 03 2L 13
Front exhaust pipe, 2.6 Petrol	2C 10
Front floor, 2¼ Petrol and Diesel	2G 10
Front floor, 2.6 Petrol & 109 V8	2G 11
Front hub, except 109 V8	1J 10
Front hub, 109 V8	1J 11
Front lifting rings, 109 V8	2G 12
Front output shaft except 109 V8	1H 10
Front output shaft - gearbox 109 V8	1I 10
Front road springs	1J 15-16
Front wings	2G 07
Front wing top and valance	2G 07
Front wing panels 109 V8	2G 07
Fuel filler, 88 models	1N 14-17 2L 14
Fuel filler, 109 4 cyl	1N 14-15
Fuel filler, anti-spill 109 and H.C.P.U.	1N 17
Fuel filler, anti-spill, Australia	2L 14-15
Fuel filler, 109 2.6 Petrol	1N 16
Fuel filler cowl, H.C.P.U.	2H 12
Fuel filter, 2.6 Petrol	1N 09
Fuel filter, 2¼ Diesel	1N 10
Fuel gauge, instrument panel	2F 08
Fuel injection pipes, Diesel	1N 13
Fuel pipes, 2¼ Petrol	1N 11
Fuel pipes, 2.6 Petrol	1N 12
Fuel pipes 109 V8	1N 12
Fuel pump, 2¼ Petrol	1N 06
Fuel pump, 2¼ Diesel	1N 10

Description	Page No
'F' - continued	
Fuel pump, Bendix, 2.6 Petrol	1N 08
Fuel pump, electric, 2.6 Petrol	1N 07
Fuel pump, coil 2.6 Petrol	1N 07
Fuel pump, diaphragm, 2.6 Petrol	1N 07
Fuel pump, pedestal, 2.6 Petrol	1N 07
Fuel pump, 109 V8	1N 08
Fuel tank, 88" models	1O 02
Fuel tank, 109" 4 cyl	1O 02-3
Fuel tank, 109 V8	1O 06
Fuel tank, 2.6 Petrol	1O 04
Fuel tank mountings, 2.6 Petrol	1O 05-6
Fuel trap 2.6 Petrol	1M 08
Fuse box	2F 09
'G'	
Gasket set, carburetter, 2¼ Petrol	1M 02
Gasket set, carburetter, 2.6 Petrol	1M 05
Gasket set, decarbonising 2¼ Petrol	1C 02
Gasket set, decarbonixing 2.6 Petrol	1D 03
Gasket set, decarbonising 2¼ Diesel	1E 02
Gasket set, engine overhaul, 2¼ Petrol	1C 02
Gasket set, engine overhaul 2.6 Petrol	1D 03
Gasket set, engine overhaul, 2¼ Diesel	1E 02
Gauge panel - instruments	2F 08
Gauge unit, fuel tank, 88"	1O 02
Gauge unit, fuel tank, 109" 4 cyl	1O 02-3
Gauge unit - fuel tank, 2.6 Petrol	1O 04
Gauge unit, fuel tank - 109 V8	1O 06
Gauge - water temperature	2F 08
Gearbox assembly, except 109 V8	1H 02
Gearbox assembly 109 V8	1I 02
Gearbox assembly less transfer box	1H 02
Gearbox 1st speed gear mainshaft	1H 04
Gearbox 2nd speed gear mainshaft	1H 04
Gearbox 3rd speed gear mainshaft	1H 04
Gearbox casing 109 V8	1I 04
Gearbox drain plug	1H 03
Gearbox draing plug 109 V8	1I 04
Gearbox differential 109 V8	1I 10-11
Gearbox front cover	1H 03
Gearbox filler plug 109 V8	1I 04
Gearbox gasket kit	1H 02
Gearbox gasket kit 109 V8	1I 04
Gearbox, gear lever, F.W.D.	1H 12
Gearbox, high gear wheel	1H 07
Gearbox, intermediate gear cluster	1H 07
Gearbox, layshaft cluster	1H 05
Gearbox, low gear wheel, except 1 ton	1H 08
Gearbox, low gear wheel, 1 ton	1H 07
Gearbox, main gear lever assembly	1H 11
Gearbox, mainshaft	1H 04
Gearbox mainshaft gear	1H 04
Gearbox mountings 109 V8	1I 05

Description	Page No
'G' - continued	
Gearbox oil filter 109 V8	1I 04
Gearbox, output shaft	1H 07
Gearbox primary pinion & constant gear	1H 04
Gearbox, reverse idler gear	1H 05
Gearbox, selectors and levers	1H 11
Gearbox, selector rod, F.W.D.	1H 12
Gearbox, selector fork, F.W.D.	1H 12
Gearbox, selector fork, transfer gear lever	1H 13
Gearbox selector shaft, F.W.D.	1H 12
Gearbox, selector shaft, transfer gear lever	1H 13
Gearbox transfer casing	1H 09
Gearbox, transfer gear change lever	1H 13
Gear - high range - front output	1I 10
Gear - high range - intermediate	1I 09
Gear - input 109 V8	1I 09
Gear - mainshaft transfer 109 V8	1I 06
Gear - reverse idler 109 V8	1I 09
Gears, oil pump, 2.6 Petrol	1D 05
Gears - 2nd & 3rd mainshaft 109 V8	1I 06
Gears - intermediate 109 V8	1I 09
Glass, rear door	2H 18
Glass - rear door 109 V8	2H 18
Glass - rear window 109 V8	2H 16
Glass, roof, 88" Station Wagon	2H 17
Glass, roof, 109" Station Wagon	2H 17
Glass, side windows, rear, Station Wagon	2H 16
Glass, windscreen	2G 10
Glass - windscreen 109 V8	2G 10
Grab rail, centre front seat 109"	2K 04
Grab rail, centre seat 109" S.W.	2K 03
Grille mesh	2G 05
Grille panel	2G 05
Grommets and plugs	2L 09
Gudgeon pin, 2¼ Petrol	1C 03
Gudgeon pin, 2.6 Petrol	1D 04
Gudgeon pin, 2¼ diesel	1E 03
'H'	
Halfshaft complete, front axle	1J 05
Half shaft - front 109 V8	1J 05
Half shafts, rear 88"	1J 12
Half shafts, rear axle, 109"	1J 13
Handbrake lever assembly	1L 14
Handbrake cross shafts, LH Stg	1L 15
Handbrake relay lever	1L 15
Hand throttle control, 2¼ Diesel	10 14
Harness and leads, 2¼ Petrol	2F 10
Harness and leads, 2.6 Petrol	2F 10
Harness and leads, 2¼ Diesel	2F 11
Headlamps	2F 02
Headlamps 109 V8	2F 02
Headlamp retaining panel	2G 07
Heat shield - starter solenoid 109 V8	1F 09
'H' - continued	
Heatshield, 2¼ Petrol	2C 02-3
Heatshield, distributor, 2.6 Petrol	2E 04-5
Heat transfer cover assembly 109 V8	1F 08
Heater plugs, cylinder head 2¼ Diesel	1E 11
Heater plug leads, 2¼ Diesel	1E 11
Hinges, Bonnet	2G 06
Hinges, front door	2G 16
Hinges, rear door	2I 02
Hinges, rear side door	2G 18
Hinge, tailboard	2H 13
Hinge, windscreen	2G 10
Hinge for bonnet 109 V8	2G 06
Hood, H.C.P.U.	2L 04
Hoodsticks, H.C.P.U.	2L 04
Hook, towing - H.C.P.U.	2L 02
Horn	2F 09
Horn 109 V8	2F 09
Hose, air pump, 2.6 Petrol	1D 14
Hose - thermostat by-pass 109 V8	1F 07
Hoses - air inlet non-detoxed, 109 V8	1N 04
Housing assembly, rear mainshaft bearing 109 V8	1I 05
Housing, front output shaft	1H 10
Housing, mainshaft bearing	1H 09
Housing, speedometer pinion	1H 09
Housing, swivel pin	1J 06
Housing, swivel pin bearing	1J 05
Housing, steering relay	1K 05
H.T. lead set - detoxed 109 V8	2E 06
H.T. lead set - non-detoxed 109 V8	2E 06
Hub - viscous drive 109 V8	1F 12
Hylomar sealing compound	2L 07
'I'	
Idler shaft - reverse 109 V8	1I 09
Ignition coil	2F 09
Ignition leads set, 2¼ Petrol	2E 02-3
Ignition leads set, 2.6 Petrol	2E 04-5
Ignition warning light	2F 07
Injector nozzle, 2¼ Diesel	1N 10
Inlet manifold, 2¼ Petrol	1C 13
Inlet manifold, 2¼ Diesel	1E 13
Inlet manifold 109 V8	1F 06-7
Inlet valve, 2¼ Petrol	1C 06
Inlet valve, 2.6 Petrol	1D 07
Inlet valve, 2¼ Diesel	1E 06
Inlet valve, 109 V8	1F 09
Inner tubes	1J 18
Instrument cowl	2F 07
Instrument panel	2F 07
Instrument panel, auxiliary	2F 13
Interior mirror	2I 03
Intermediate exhaust pipe, 88"	2C 03
Intermediate exhaust pipes, 109" 4 cylinder	2C 04
Intermediate exhaust pipe, 2.6 Petrol	2C 10

Description	Page No
'J'	
Joint washer, exhaust manifold 2¼ Petrol	1C 13
Joint washer, exhaust manifold 2.6 Petrol	1D 13
Joint washer, exhaust manifold 2¼ Diesel	1E 13
Joint washer, inlet manifold 2¼ Petrol	1C 13
Joint washer, inlet manifold 2.6 Petrol	1M 05
Joint washer, inlet manifold 2¼ Diesel	1E 13
Journal, front propellor shaft	1J 02-3
Journal, rear propellor shaft	1J 14
'K'	
Key, ignition	2F 09
Knob, wiper/washer switch	2F 09
'L'	
Ladder rack, H.C.P.U.	2H 14
Layshaft cluster 109 V8	1I 09
Leads - battery	2F 12
Lens, brake warning	2F 13
Lifting brackets engine, 2¼ Petrol	1C 11
Lifting brackets, engine, 2.6 Petrol	1D 12
Lifting brackets, engine, 2¼ Diesel	1E 11
Locker lid for seat base	2G 12
Locks, front door	2G 15
Locks, rear door, S.W.	2H 18
Locks, rear side doors	2G 18
Loctite	2L 07
Lower crash padding	2J 03
'M'	
Main gear lever 109 V8	1I 13
Mainshaft and synchro outer member 109 V8	1I 06
Master cylinder, brake	1L 07 1L 08
Master cylinder brake overhaul kit	1L 07 1L 08
Master cylinder, clutch	1G 04
Master cylinder, clutch, overhaul kit	1G 04
Mechanism assembly, ventilator dash	2G 09
Mounting plate, rear lamps - H.C.P.U.	2H 11
Mountings, side panel, S.W.	2H 15
Motif - front grille 109 V8	2G 05
Mudflaps, H.C.P.U.	2H 14
'N'	
Number plate lamp	2F 04
'N' - continued	
Number plate panel, H.C.P.U.	2H 13
'O'	
Oil filler cap - engine 109 V8	1F 10
Oil filter assembly, 2¼ Petrol	1C 12
Oil filter assembly, 2.6 Petrol	1D 13
Oil filter assembly, 2¼ Diesel	1E 12
Oil filter - engine 109 V8	1F 05
Oil level rod, 2¼ Petrol	1C 07
Oil level rod, 2.6 Petrol	1D 08
Oil level rod, 2¼ Diesel	1E 07
Oil level rod 109 V8	1F 02
Oil pressure switch, 2¼ Petrol	1C 12
Oil pressure switch, 2.6 Petrol	1D 11
Oil pressure switch, 2¼ Diesel	1E 12
Oil pressure switch 109 V8	1F 05
Oil pressure transmitter 109 V8	1F 05
Oil pump, 2¼ Petrol	1C 04
Oil pump, 2.6 Petrol	1D 05
Oil pump, 2¼ Diesel	1E 04
Oil pump, 109 V8	1F 05
Oil relief valve 109 V8	1F 05
Oil seal-primary 109 V8	1I 06
Oil screen - sump 109 V8	1F 03
Oil temperature transmitter 109 V8	1F 05
Outlet pipe 109 V8	1F 07
Output shaft - rear- gearbox 109 V8	1I 11
Overflow bottle	2D 04
Overhaul kit, fuel pump 2¼ Petrol	1N 06
Overhaul kit, fuel pump, 2¼ Diesel	1N 10
'P'	
Paint	2L 10
Panel, number plate - H.C.P.U.	2H 13
Parcel tray	2J 03
Petrol catch tank	2L 14-15
Pinion retaining kit, starter motor	2E 07-8
Pinion - speedo drive - gearbox 109 V8	1I 11
Pipes, clutch master cylinder	1G 04
Pistons, 2¼ Petrol	1C 03
Pistons, 2.6 Petrol	1D 04
Pistons, 2¼ Diesel	1E 03
Pistons, 109 V8	1F 04
Piston rings, 2¼ Petrol	1C 03
Piston rings, 2.6 Petrol	1D 04
Piston rings, 2¼ Diesel	1E 03
Piston rings, 109 V8	1F 04
Plastigauge strip	2L 07
Pressure differential warning actuator	1L 11-13
Primary, pinion - gearbox 109 V8	1I 06
Prop rod - bonnet 109 V8	2G 06
Propellor shaft, front except 1 ton	1J 02
Propellor shaft, front 109 1 ton	1J 03
Propellor shaft, front 109 V8	1J 04
Propellor shaft, rear	1J 14
Protection pad, bumper	2G 02

Description	Page No
'P' - continued	
Pulley for air pump, 2.6 Petrol	1D 14
Pulley - alternator 18 ACR 109 V8	2E 16
Pulley - crankshaft 109 V8	1F 03
Push rod, tappet, 2¼ Petrol	1C 06
Push rod, tappet, 2.6 Petrol	1D 07
Push rod, tappet, 2¼ Diesel	1E 06
Push rod - valve gear 109 V8	1F 05
'R'	
Radiator block	2D 02
Radiator block 109 V8	2D 03
Radiator cap	2D 02
Radiator cowl	2D 02
Radiator grille	2G 05
Radiator grille panel	2G 05
Radiator hoses	2D 02-04
Radiator shroud	2D 02
Rear body, 88"	2H 02
Rear body, 109" except Station Wagon	2H 04
Rear body, 109" Station Wagon	2H 07
Rear body, H.C.P.U.	2H 09
Rear bumper stops, H.C.P.U.	2H 10
Rear door, Station Wagon	2H 18
Rear foglamp	2F 05
Rear hub, 88"	1J 10
Rear hub, 109"	1J 13
Rear lamp mounting plate, H.C.P.U.	2H 11
Rear name plate, 88"	2H 03
Rear name plate, 109" except Station Wagon	2H 06
Rear panel, rear body, 88"	2H 02
Rear panel, rear body, 109" except Station Wagon	2H 04
Rear panel, rear body, 109" Station Wagon	2H 07
Rear road spring	1J 17-18
Rear seats, 88" Station Wagon	2K 06
Rear seats, 109" Station Wagon	2K 07
Rear seats, 109" 12 seater	2K 08
Rearside door	2G 17
Rear step, Station Wagon	21 02
Rear wheelguards, H.C.P.U	2H 14
Rectifier, alternator, 2¼ Petrol	2E 10
Rectifier, alternator, 2.6 Petrol	2E 12
Rectifier, alternator, 2¼ Diesel	2E 14
Rectifier, alternator 18 ACR 109 V8	2E 16
Reflectors	2F 05
Regulator - alternator 18 ACR 109 V8	2E 16
Relay, auxiliary driving lamps	2F 02
Relay, brake warning	2F 13
Release valve, oil pump 2.6 Petrol	1D 05
Repair kit for adjuster unit, transmission brake	1L 05
Repair kit for expander unit, transmission brake	1L 05
Repair kit, fuel pump, 2¼ Petrol	1N 06
Repair kit, fuel pump, 2¼ Diesel	1N 10
'R' - continued	
Retainers, glass, rear door	2H 18
Retainers, roof, 88" Station Wagon	2H 17
Retainers, roof, 109" Station Wagon	2H 17
Retainers, side windows, rear, Station Wagon	2H 16
Retainers, windscreen	2G 10
Retaining strap, seat cushion	2J 09
Retaining straps, seat squab	2J 09
Reverse gear modification kit	1H 06
Reverse lamp	2F 05
Road wheel	1J 18
Road wheel nuts	1J 18
Rocker cover, 2¼ Petrol	1C 11-12
Rocker cover, 2.6 Petrol	1D 12
Rocker cover, 2¼ Diesel	1E 12
Rocker cover 109 V8	1F 10
Rockers, valve gear, 2¼ Petrol	1C 06
Rockers, valve gear, 2¼ Diesel	1E 06
Rocker, exhaust valve, 2.6 Petrol	1D 08
Rocker, inlet valve, 2.6 Petrol	1D 07
Rocker shaft - engine 109 V8	1F 05
Roof, 88" Station Wagon	2H 17
Roof lamp	2F 06
Roof assembly 109 V8	2H 17
Roof trim, 88" Station Wagon	2J 06
Roof trim, 109" Station Wagon	2J 07
Rotor arm distributor, 2¼ Petrol	2E 02-3
Rotor arm distributor, 2.6 Petrol	2E 04-5
Rotor arm - distributor - detoxed 109 V8	2E 06
Rotor arm - distributor non-detoxed 109 V8	2E 06
Rubber mat, 88" Station Wagon	2J 08
'S'	
Screen for distributor, 2.6 Petrol	2E 04-5
Seal kit - starter motor 109 V8	2E 09
Seals - gearbox 109 V8	2G 11
Sealed beam unit	2F 02
Sealing ring kit, starter motor, 2¼ Diesel	2E 09
Sealing rubbers, front doors	2G 13
Sealing rubbers, rear door	2H 18
Sealing rubbers, rear side door	2G 17
Sealing rubbers, roof, 88" Station Wagon	2H 17
Sealing rubbers, roof, 109" Station Wagon	2H 17
Sealing rubbers, side windows rear, Station Wagon	2H 16
Sealing rubber, tailboard	2H 13
Sealing rubber, windscreen	2G 10
Seat base	2G 12
Seat base 109 V8	2G 12
Seat belts	2J 15-16
Seat cushion adjustable 109" front	2J 10
Seat cushion, centre seat, 109" Station Wagon	2K 03

Description	Page No
'S' - continued	
Seat cushion, non-adjustable, front	2J 09
Seat frame, adjustable, front, 109"	2J 10
Seats, front - "County"	2J 14
Seat slides, front	2J 09
Seat slides, adjustable, front 109"	2J 10
Seat squabs, front	2J 09
Seat squab, centre seat, 109" Station Wagon	2K 02
Selector shafts and levers - main - gearbox 109 V8	1I 12
Selector shafts and levers - transfer gearbox 109 V8	1I 12
Servo unit - brake	1L 07-8
	2L 13
Shock absorber, front	1J 16
Shock absorber, rear	1J 16
Shroud for steering column	1O 14
Shuttle valve	2L 12
Side cover oil filler pipe, 2¼ Petrol	1C 08
Side cover and oil filler pipe 2.6 Petrol	1D 08
Side cover oil filler pipe, 2¼ Diesel	1E 09
Side lamps	2F 03
Side light - roof 109 V8	2H 17
Side panel assembly, Station Wagon	2H 15
Side panel, rear body, 88"	2H 02
Side panel, rear body, 109" except Station Wagon	2H 04
Side panel, rear body, 109" Station Wagon	2H 07
Side screens, front doors 109 V8	2G 14
Side screens, rear side doors	2G 17
Side windows, rear, Station Wagon	2H 16
Silencer and tailpipe 88"	2C 06
Silencer and tailpipe 109 V8	2C 11
Silencer and tailpipe, 109" 4 cyl	2C 07-8
Silencer and tailpipe, 2.6 Petrol	2C 10
Silencer intermediate 109 V8	2C 11
Sliding window - front door 109 V8	2G 14
Sliding window - rear side door 109 V8	2G 17
Sill panels	2G 13
Solenoid carburetter, 2¼ Petrol	1M 02
Solenoid, carburetter, 2.6 Petrol	1M 07
Spare wheel carrier, rear door	2I 02
Spare wheel clamp, rear body, 88"	2H 02
Spare wheel mountings, 109" except Station Wagon	2H 05
Spare wheel mounting, H.C.P.U.	2H 12
Sparking plug, detoxed 109 V8	2E 06
Sparking plug, non-detoxed 109 V8	2E 06
Sparking plug, 2¼ Petrol	2E 02-3
Sparking plug, 2.6 Petrol	2E 04-5
Speedometer	2F 08
Speedometer cable 109 V8	2F 08

Description	Page No
'S' - continued	
Speedometer cable	2F 08
Speedometer drive	1H 08
Speedo drive housing assembly 109 V8	1I 05
Speedo worm drive - gearbox 109 V8	1I 11
Springs auto advance, 2¼ Petrol	2E 02
Spring bottom plate, front	1J 15-16
Spring bottom plate, rear	1J 17-18
Spring set, starter motor, 2¼ Diesel	2E 09
Spring valve 109 V8	1F 05
Starter motor, 2¼ Petrol	2E 07
Starter motor, 2.6 Petrol	2E 08
Starter motor, 2¼ Diesel	2E 09
Starter motor, 109 V8	2E 09
Starter solenoid 109 V8	2E 09
Starter solenoid, Petrol models	2F 12
Starter solenoid, 2¼ Diesel	2E 09
Starting dog, 2¼ Petrol	1C 03
Starting dog, 2.6 Petrol	1D 04
Starting dog, 2¼ Diesel	1E 03
Steering column, inner	1K 02
Steering column, outer	1K 02
Steering column mountings	1K 04
Steering column support bracket	1K 03
Steering damper, 109 1 ton	1K 07
Steering damper, 109 V8	1K 08
Steering drag link	1K 06
Steering drag link, 109 V8	1K 08
Steering longitudinal tube	1K 06-7
Steering relay	1K 05
Steering track rod	1K 06
Steering unit	1K 02
Steering wheel	1K 02
Stop/tail lamps	2F 03
Striker, door locks	2G 15
Striker, lock, reardoor, Station Wagon	2H 18
Stub shaft, front axle	1J 05
Stud kit for cylinder block, 2¼ Petrol	1C 02
Stud kit for cylinder block, 2¼ Diesel	1E 02
Stud and dowel kit for cylinder block, 2.6 Petrol	1D 03
Sundry parts kit, alternator, 2¼ Petrol	2E 10
Sundry parts kit, alternator, 2¼ Diesel	2E 14
Sundry parts kit, alternator, 2.6 Diesel	2E 12
Sundry parts kit, distributor 2¼ Petrol	2E 02
Sundry parts kit, distributor, 2.6 Petrol	2E 04
Sundry parts kit, starter motor, 2¼ Petrol	2E 07
Sundry parts kit, starter motor, 2.6 Petrol	2E 08
Sundry parts kit, starter motor, 2¼ Diesel	

Description	Page No
'S' - continued	
Sundry parts kit - starter motor 109 V8	2E 09
Sun visor, interior, Station Wagon	2J 05
Support bracket, air pump, 2.6 Petrol	1D 14
Support plate, solenoid, 2.6 Petrol	1M 07
Suppressor - alternator 18 ACR 109 V8	2E 16
Switch, choke warning, 2¼ Petrol	1C 11
Switch, fog and spot lamp	2F 09
Switch, headlamp, indicator, dip and horn	2F 09
Switch, ignition, petrol models	2F 09
Switch, lamps, heater, panel and interior	2F 09
Switch, pedal travel	2F 13
Switch, starter, Diesel models	2F 09
Switch, stop lamps	1L 06
Switch, vacuum loss	2F 13
Switch, wiper/washer	2F 09
Swivel pin and steering lever	1J 06
Swivel pin and steering lever 109 V8	1J 06
'T'	
Tailboard assembly	2H 13
Tailboard fixings, 88"	2H 03
Tailboard fixings, 109"	2H 06
Tapes, bodyside - "County"	2K 09
Tappet, 2¼ Petrol	1C 06
Tappet, 2¼ Diesel	1E 06
Tappet, 109 V8	1F 05
Tensioner, camshaft chain, 2¼ Petrol	1C 05
Tensioner, camshaft chain, 2.6 Petrol	1D 06
Tensioner, camshaft chain, 2¼ Diesel	1E 05
Terminals, auxiliary	2F 09
Thermostat, 2¼ Petrol	1C 10
Thermostat, 2.6 Petrol	1D 11
Thermostat, 2¼ Diesel	1E 10
Thermostat, 109 V8	1F 07
Thermostat housing, 2¼ Petrol	1C 10
Thermostat housing, 2.6 Petrol	1D 11
Thermostat housing, 2¼ Diesel	1E 10
Throttle valve, carburetter, 2.6 Petrol	1M 07
Toe panel and gusset bracket, 109" S.W.	2H 08
Tools	2L 11
Tools 109 V8	2L 11
Tool locker, H.C.P.U.	2L 05
Top cover - gearbox 109 V8	1I 04
Towing extension bracket, H.C.P.U.	2L 03
Towing hook, H.C.P.U.	2L 02
Towing jaw and pintle, H.C.P.U.	2L 03
Towing rings, front 109 V8	2G 12
Transfer Gear Lever 109 V8	1I 12
Transmission brake	1L 05
'T' - continued	
Trimming raw materials	2L 07
Tropical roof, 88" Station Wagon	2H 17
Tropical roof, 109" Station Wagon	2H 17
Tunnel - gearbox 109 V8	2G 11
Tyres	1J 18
'U'	
U bolt, front road spring	1J 15-16
U bolt, rear road spring	1J 17-18
Upper dash crash padding	2J 02
'V'	
Vacuum actuator - gearbox 109 V8	1I 13
Vacuum actuator - housing 109 V8	1I 05
Vacuum control - detoxed 109 V8	2E 06
Vacuum control - non detoxed 109 V8	2E 06
Vacuum control valve - gearbox 109 V8	1I 13
Vacuum loss switch	2F 13
Vacuum unit, distributor, 2¼ Petrol	2E 02-3
Vacuum unit, distributor, 2.6 Petrol	2E 04-5
Valve - air control 109 V8	1N 06
Valve guides, 2¼ Petrol	1C 11
Valve guides, 2.6 Petrol	1D 11
Valve guides, 2¼ Diesel	1E 11
Valve pressure differential warning actuator	1L 11-13
Valve rocker bracket, 2¼ Petrol	1C 06
Valve rocker bracket, 2¼ Diesel	1E 06
Valve rocker shaft, 2¼ Petrol	1C 06
Valve rocker shaft, 2.6 Petrol	1D 08
Valve rocker shaft, 2¼ Diesel	1E 06
Valve rocker 109 V8	1F 05
Valve seats 109 V8	1F 09
Valve springs, 2¼ Petrol	1C 06
Valve springs, 2.6 Petrol	1D 07
Valve springs, 2¼ Diesel	1E 06
Valve springs 109 V8	1F 05
Valves, engine 109 V8	1F 09
Ventilator, dash	2G 09
Ventilator, roof, 88" Station Wagon	2H 17
Ventilator, roof, 109" Station Wagon	2H 17
Vibration damper - crankshaft 109 V8	1F 03
Viscous coupling, 2.6 Petrol	1D 10
Viscous drive unit 109 V8	1F 12
Voltage regulator, instruments	2F 08
'W'	
Warning lights, instruments	2F 08
Water pump, 2¼ Petrol	1C 10
Water pump, 2.6 Petrol	1D 09-10
Water pump, 2¼ Diesel	1E 09-10
Water pump, (viscous type drive) 109 V8	1F 11
Water pump, (non-viscous type) 109 V8	1F 10
Water pump overhaul kit, 2¼ Petrol	1C 10
Water pump overhaul kit, 2.6 Petrol	1D 09
Water pump overhaul kit, 2¼ Diesel	1E 09
Water temperature gauge	2F 08

Description	Page No	Description	Page No
'W' - continued			
Water temperature transmitter, 2¼ Petrol	1C 11		
Water temperature transmitter, 2.6 Petrol	1D 11		
Water temperature transmitter, 2¼ Diesel	1E 11		
Wheelbox, wiper motor	2F 06		
Wheel cylinder, front	1L 02-3		
Wheel cylinder, rear	1L 02-4		
Wheel cylinder overhaul kit, front	1L 02-3		
Wheel cylinder overhaul kit, rear	1L 02-4		
Wheelguards, rear - H.C.P.U.	2H 14		
Window catches rear side doors	2G 18		
Window catch, side windows, rear Station Wagon	2H 16		
Windows, fixed and sliding front door	2G 14		
Windscreen	2G 10		
Windscreen 109 V8	2G 10		
Wing mirror	2G 07		
Wiper arm	2F 06		
Wiper blade	2F 06		

ENGINE ASSEMBLIES 2¼ Litre Petrol

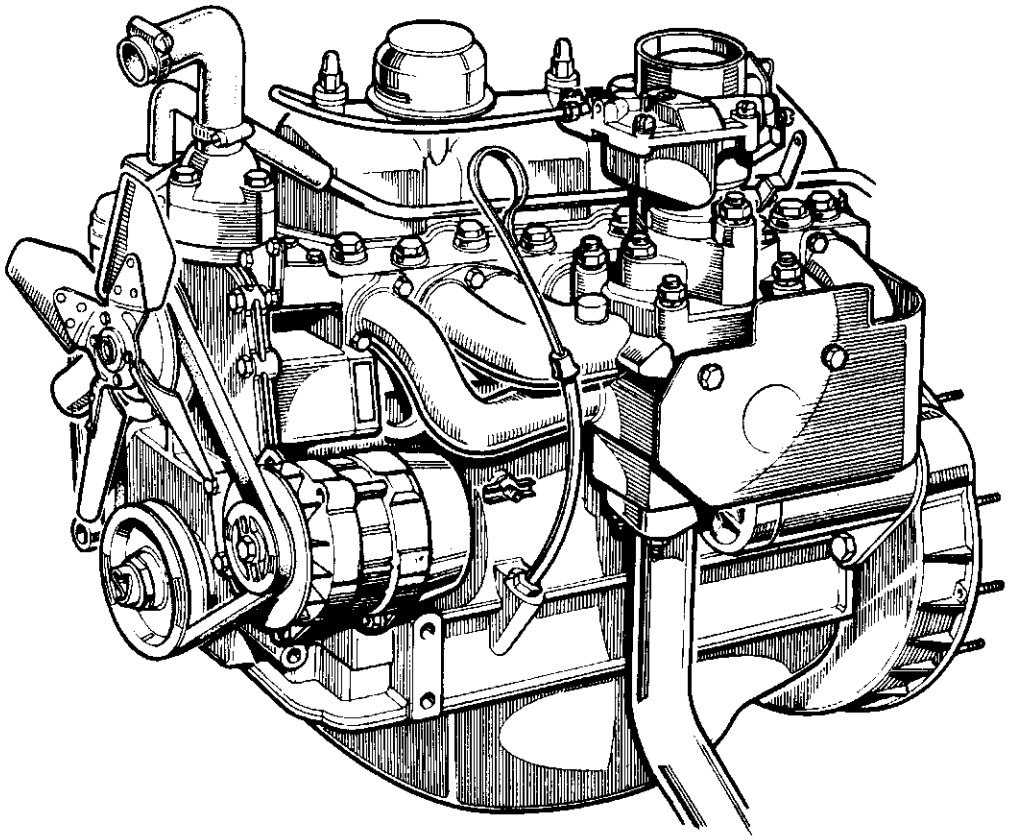

Complete Engine Assembly with Flywheel and Clutch	RTC 2672N①⑥	ERC 6673N①⑤	
Stripped Engine Assembly - New	RTC 3780N⑥	RTC 3779N⑤	RTC2352N ②
Stripped Engine Assembly - Rebuilt	RTC 2379R②⑥	RTC 2352R②⑤	RTC 2673R①⑥
	RTC 2620R①⑤	RTC 2981R④⑥	RTC 3010R③⑤
	RTC 3779R⑤⑦	RTC 3780R⑥⑧	
Short Engine	RTC 2917④⑥	RTC 2978③⑤	RTC2663 ②

①5 Bearing Crankshaft
②3 Bearing Crankshaft
③Engine prefix 361 suffix B
④Engine prefix 364 suffix B
⑤8:1 Compression Ratio
⑥7:1 Compression Ratio
⑦Engine prefix 361 suffix C
⑧Engine prefix 364 suffix C

To fit a new metric stripped engine in place of an imperial stripped engine also use conversion kit RTC 3014

ENGINE - Cylinder Block 2¼ Litre Petrol

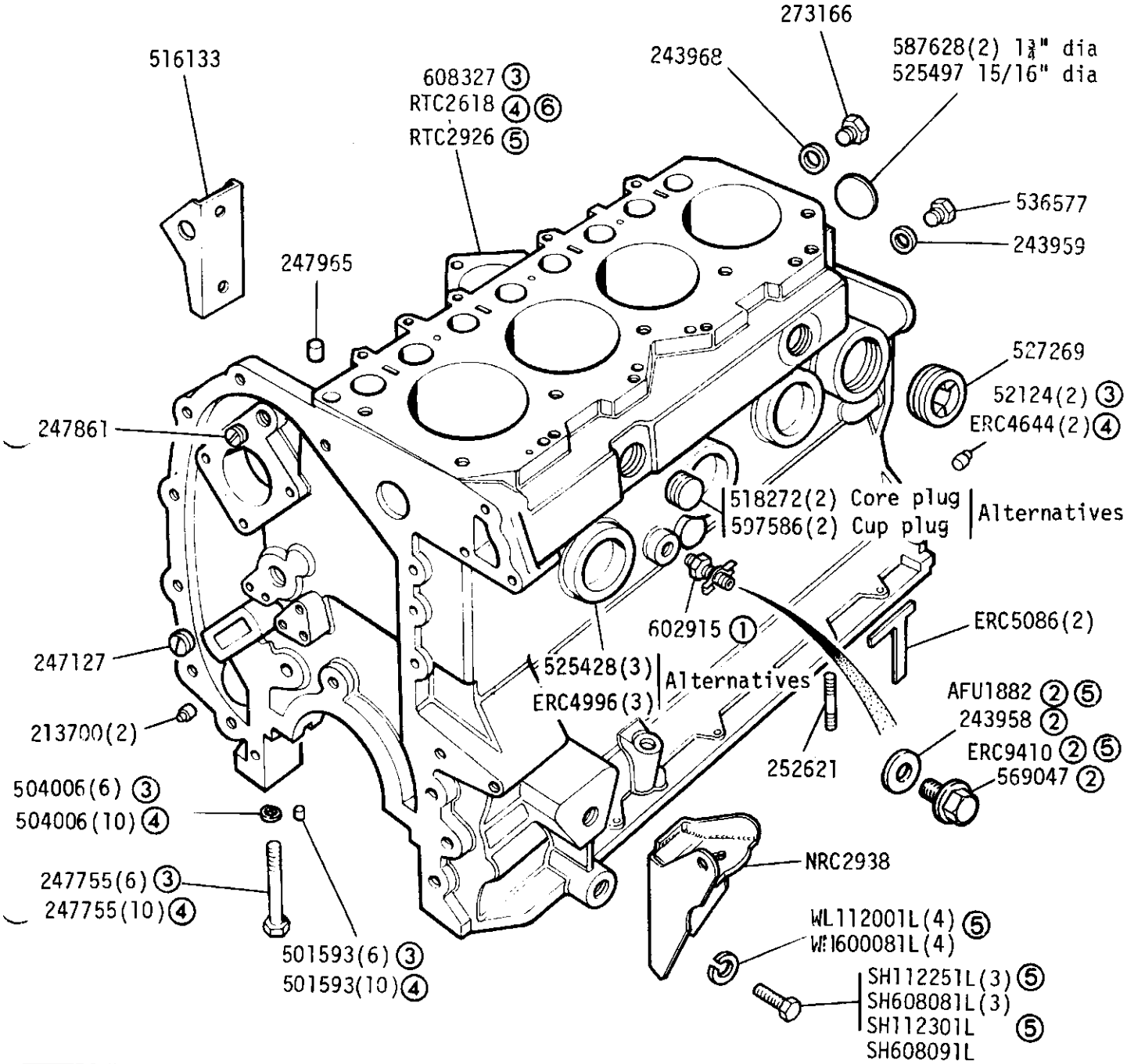

Stud Kit for Cylinder Block 600245
Cylinder Liner ERC9188(4)
Decarbonizing gasket set RTC 3335
Engine overhaul gasket set 608124
Use in conjunction with decarbonising gasket set

① Drain Tap) Alternative Fixings
② Drain Plug) Check before ordering
③ 3 bearing crankshaft
④ 5 bearing crankshaft
⑤ Engine numbers 36123672B →
36407286B
⑥ NLS - For Replacement use Block RTC2926 and Conversion Kit RTC3014

GROUP B

ENGINE - Crankshaft 2¼ Litre Petrol

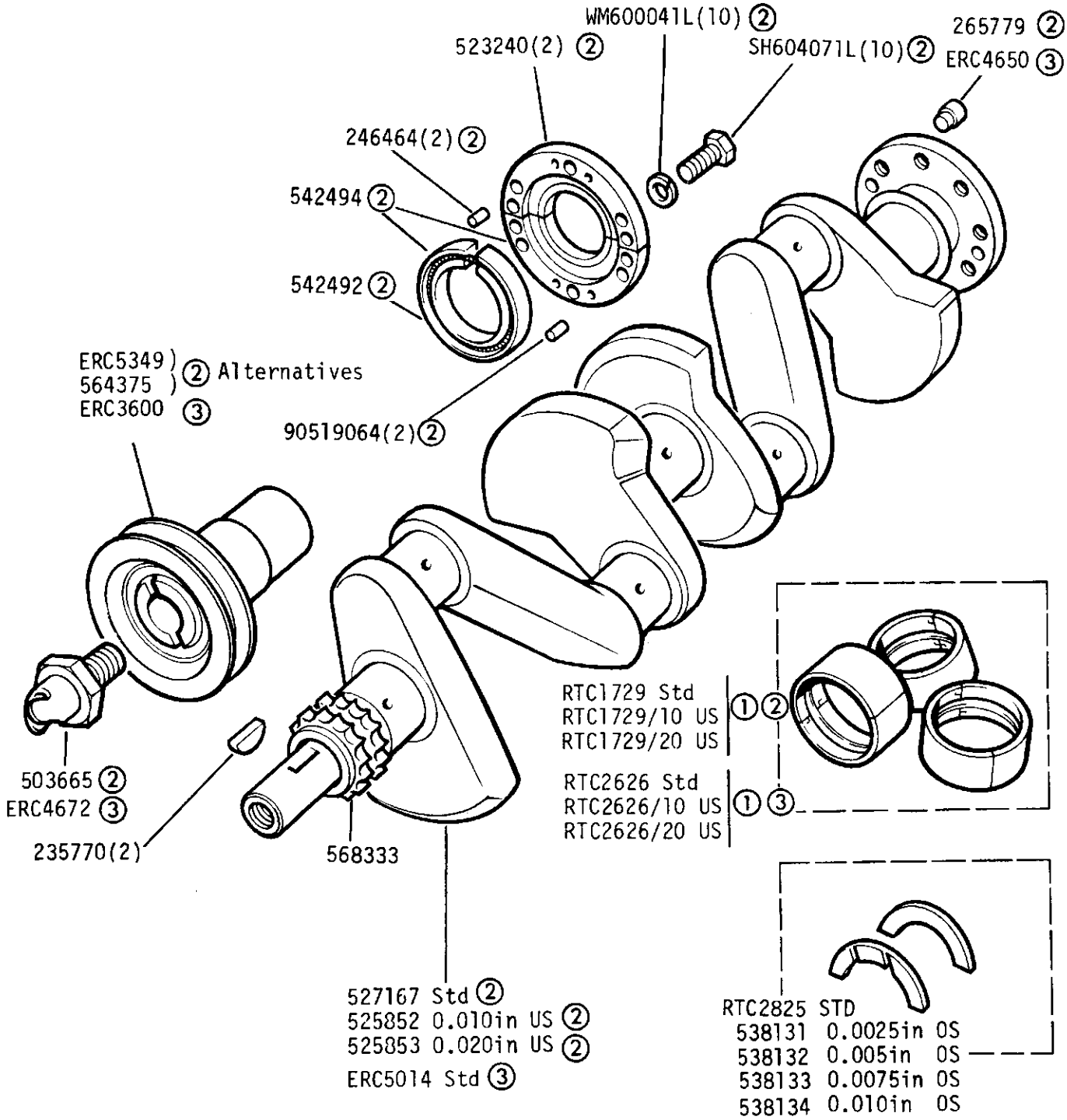

Oil Seal assy 542494 also includes 1oz tube silicone grease 270656 ②

① Engine Set

② 3 Bearing Crankshaft

③ 5 Bearing Crankshaft

Oil seal, rear main bearing ETC5369 ③

ENGINE - Connecting Rod and Piston 2¼ Litre Petrol

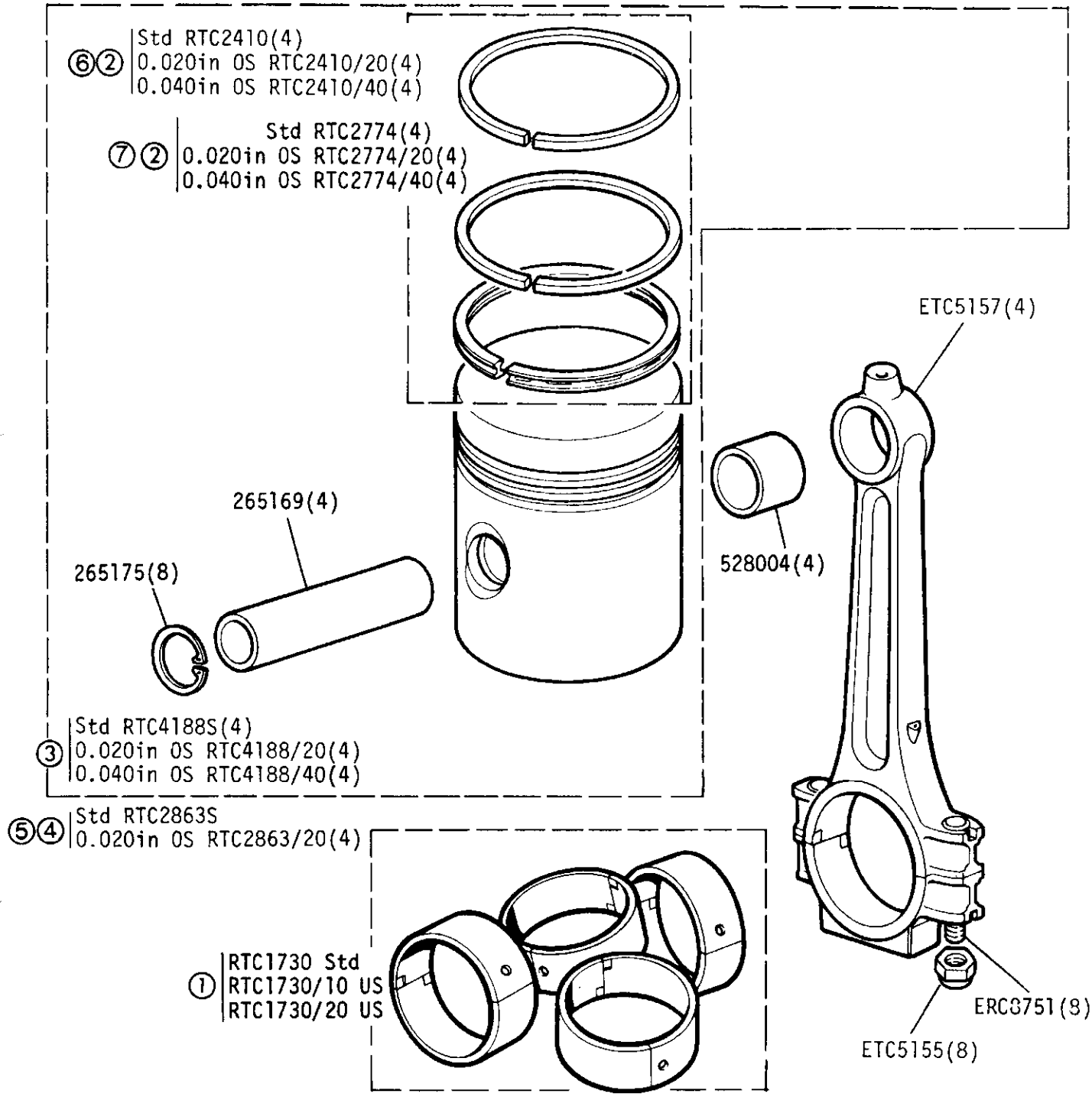

① Engine Set ② Piston Ring Set

③ All 3 bearing engines (Prefix 901 and 904) and suffix A 5 bearing engines (Prefix 361) and 8:1 CR 5 bearing engines from suffix B onwards

④ 7:1 CR 5 bearing engines (prefix 364) - suffix B onwards

⑤ To obtain 0.040in oversized pistons for 7:1 CR engines, use standard sized piston RTC2863S and piston liner ERC9188

⑥ 3 bearing engines only ⑦ 5 bearing engines only

GROUP B
ENGINE - Oil Pump 2¼ Litre Petrol

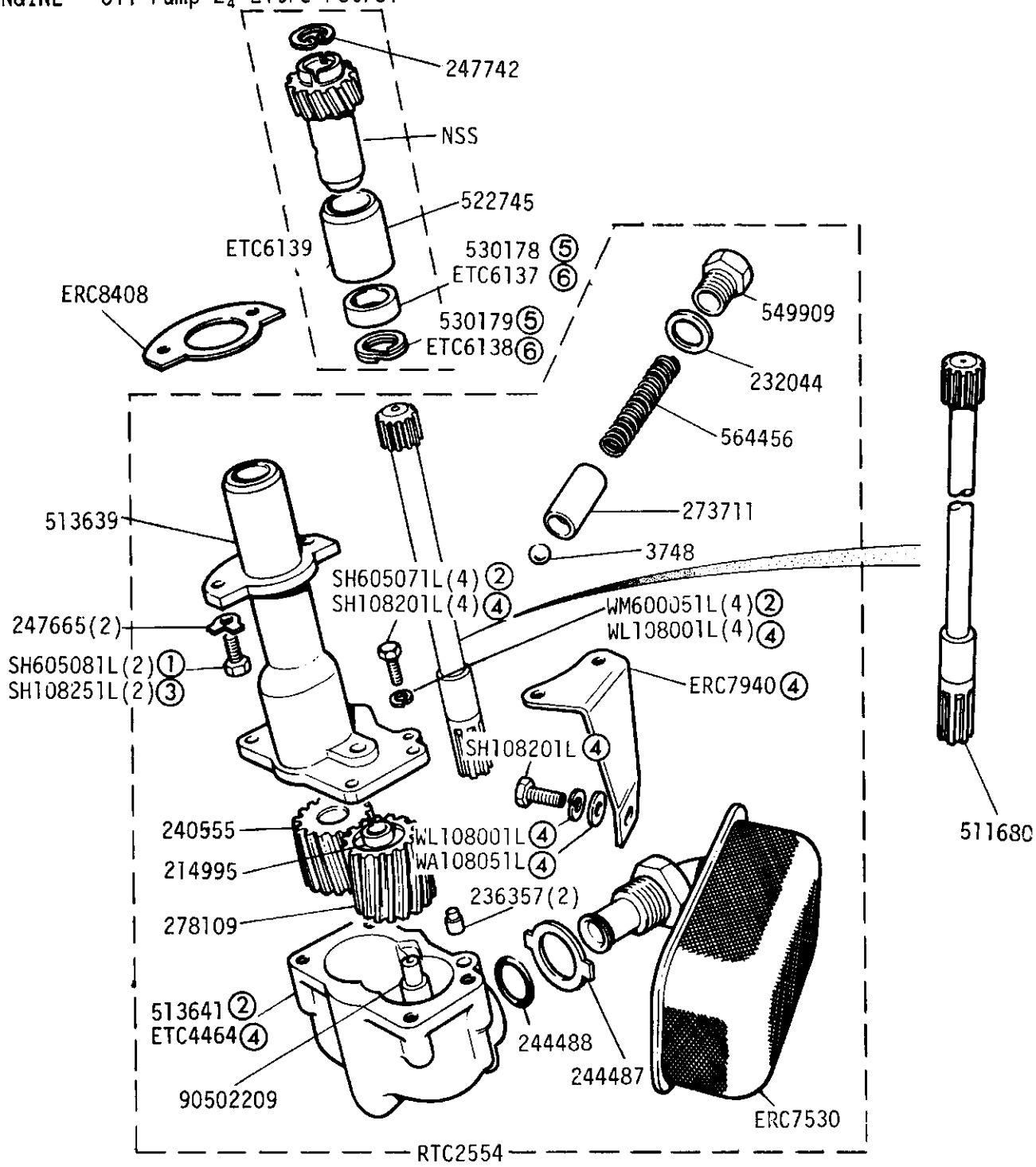

① Engines prefix 901 and 904 and engines prefix 361 and 364 suffix A only
② Engines prefix 901 and 904 and engines prefix 361 and 364 suffix A and B only
③ Engines prefix 361 and 364 suffix B and C
④ Engines prefix 361 and 364 suffix C
⑤ Use with Retaining Ring
⑥ Use with Locknut

ENGINE - Timing Chain and Tensioner 2¼ Litre Petrol

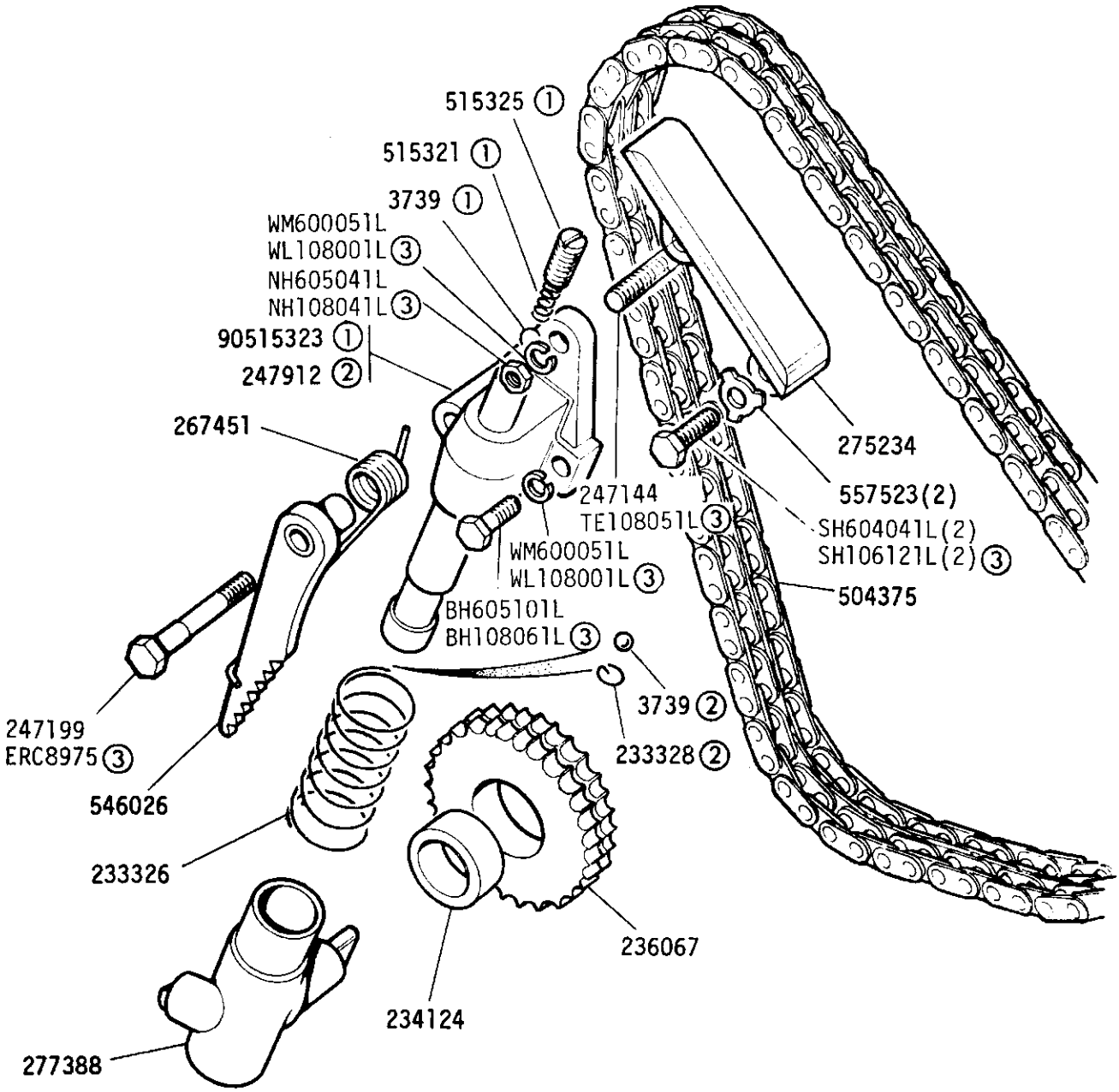

① Up to engine numbers 90290283E, 9045259E

② From engine numbers 90290284E, 90452530E

③ From engine numbers 36123672B, 36407286B

GROUP B
ENGINE - Timing Chain Tensioner - 2¼ Litre Petrol

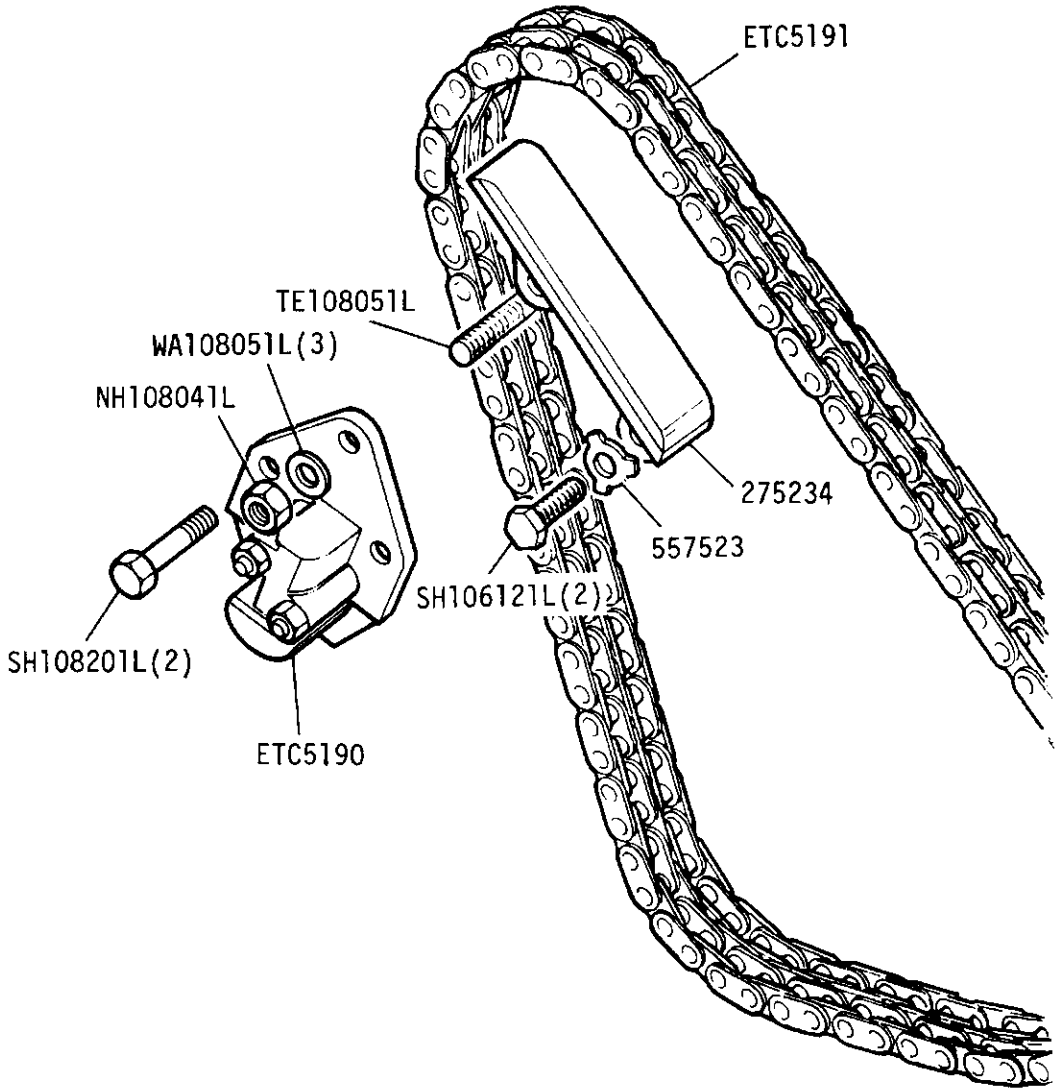

T65365

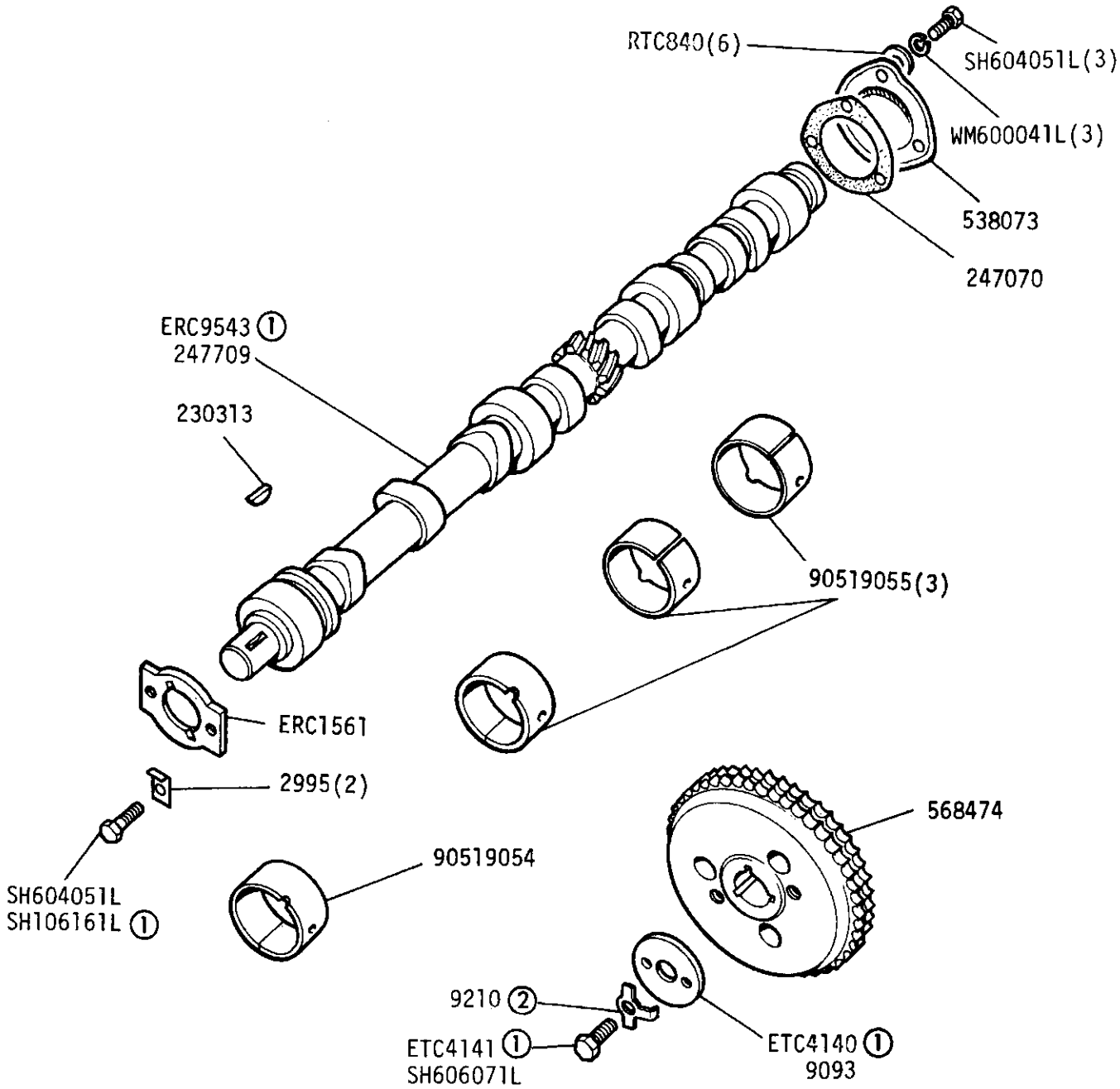

① From engine numbers 36123672B, 36407286B

Kit for fitting metric camshaft in imperial cylinder block RTC2957

② Not required from ①

GROUP B
ENGINE - Valve and Tappets 2¼ Litre Petrol

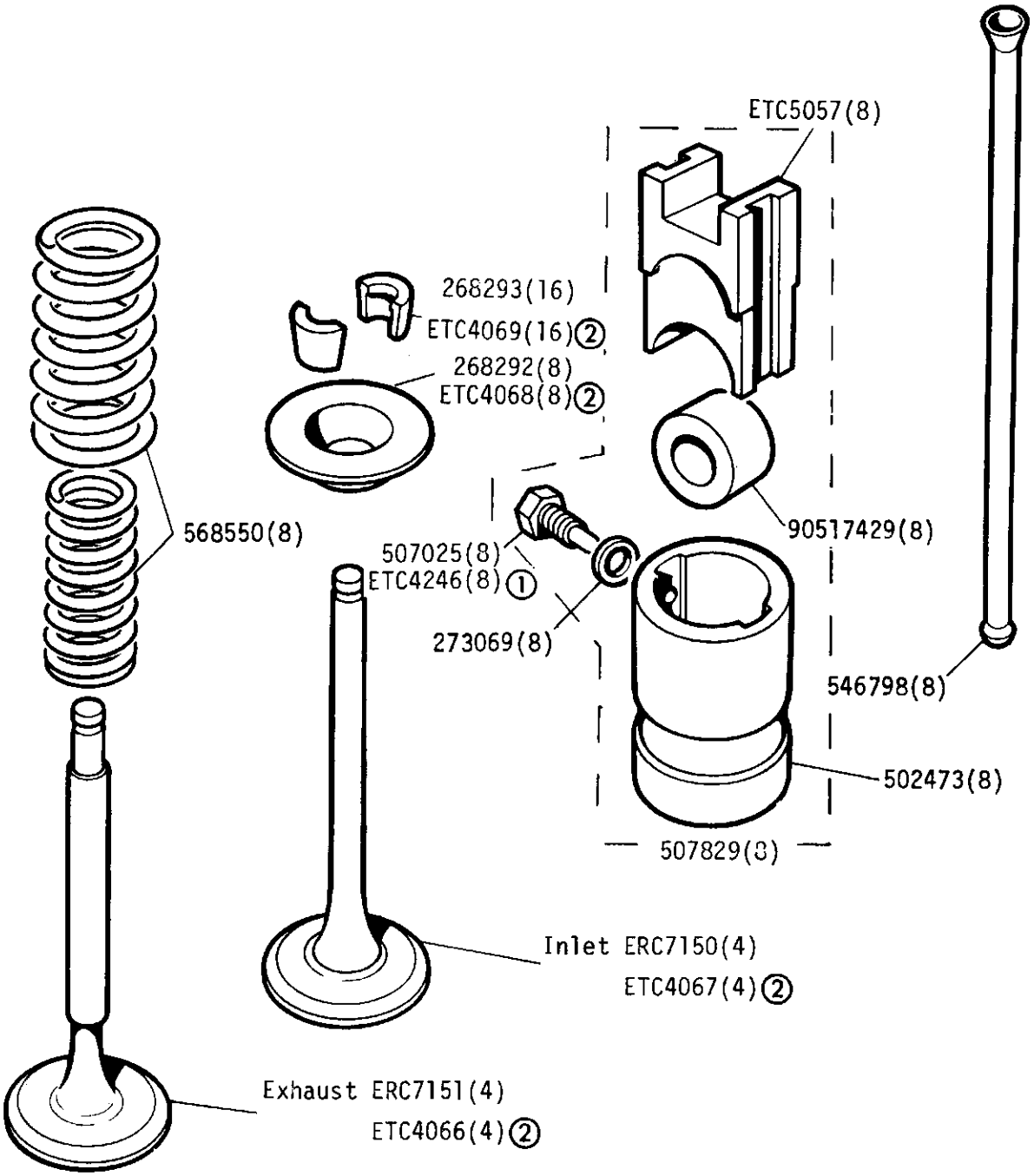

① From engine numbers 36123672B, 36407286B
② From engine number 36139552C, 36408864C.

GROUP B
ENGINE - Valve Gear and Rocker Shaft 2¼ Litre Petrol

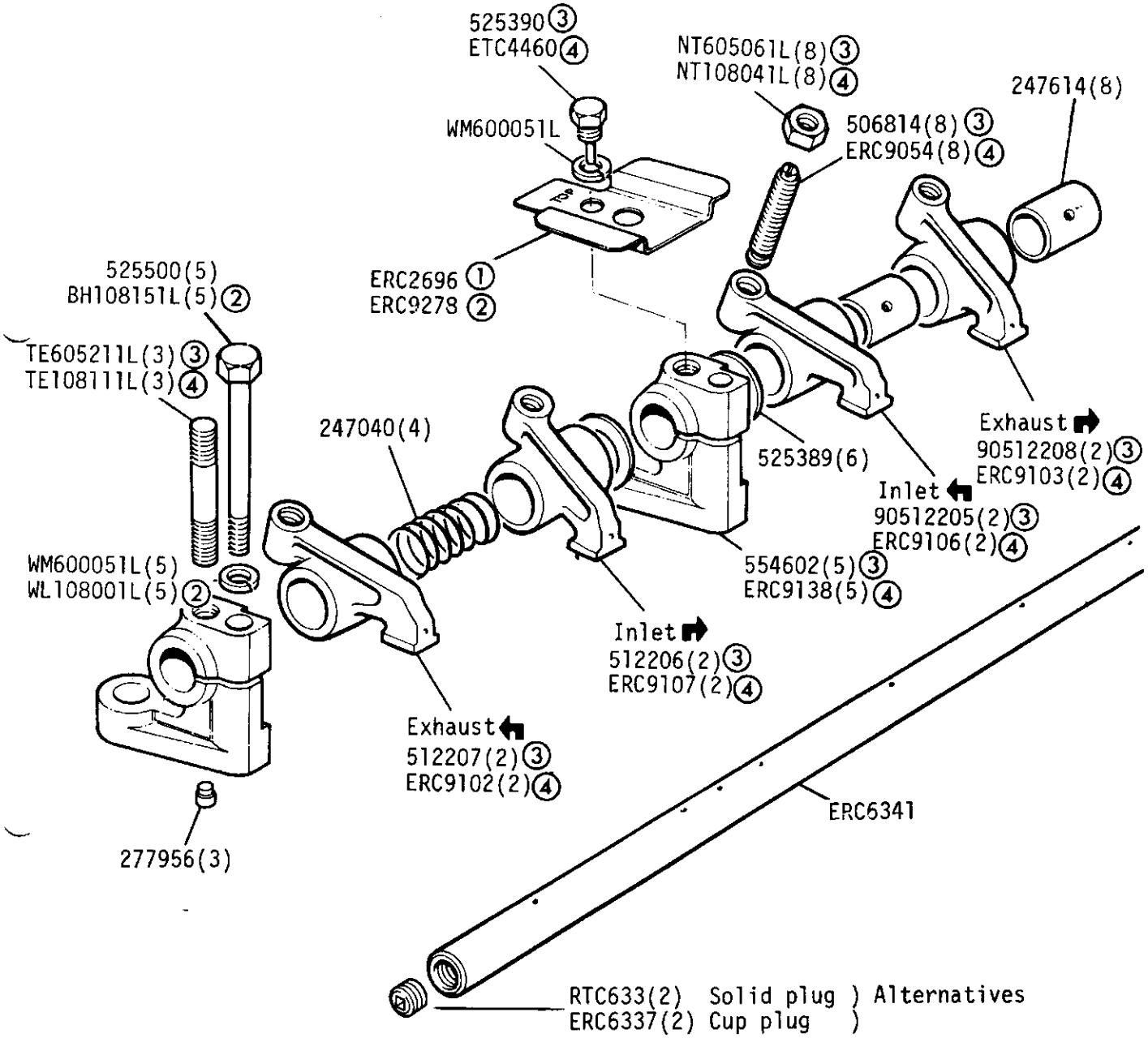

① From engine prefix 901 and 904 suffix 'E' onwards
② From engine numbers 36123672B and 36407286B
③ Engines prefixed 901 and 904, and engines prefixed 361 and 364 suffix A and B only
④ From engines prefixed 361 and 364 suffix 'C'

GROUP B
ENGINE - Crankcase Sump 2¼ Litre Petrol

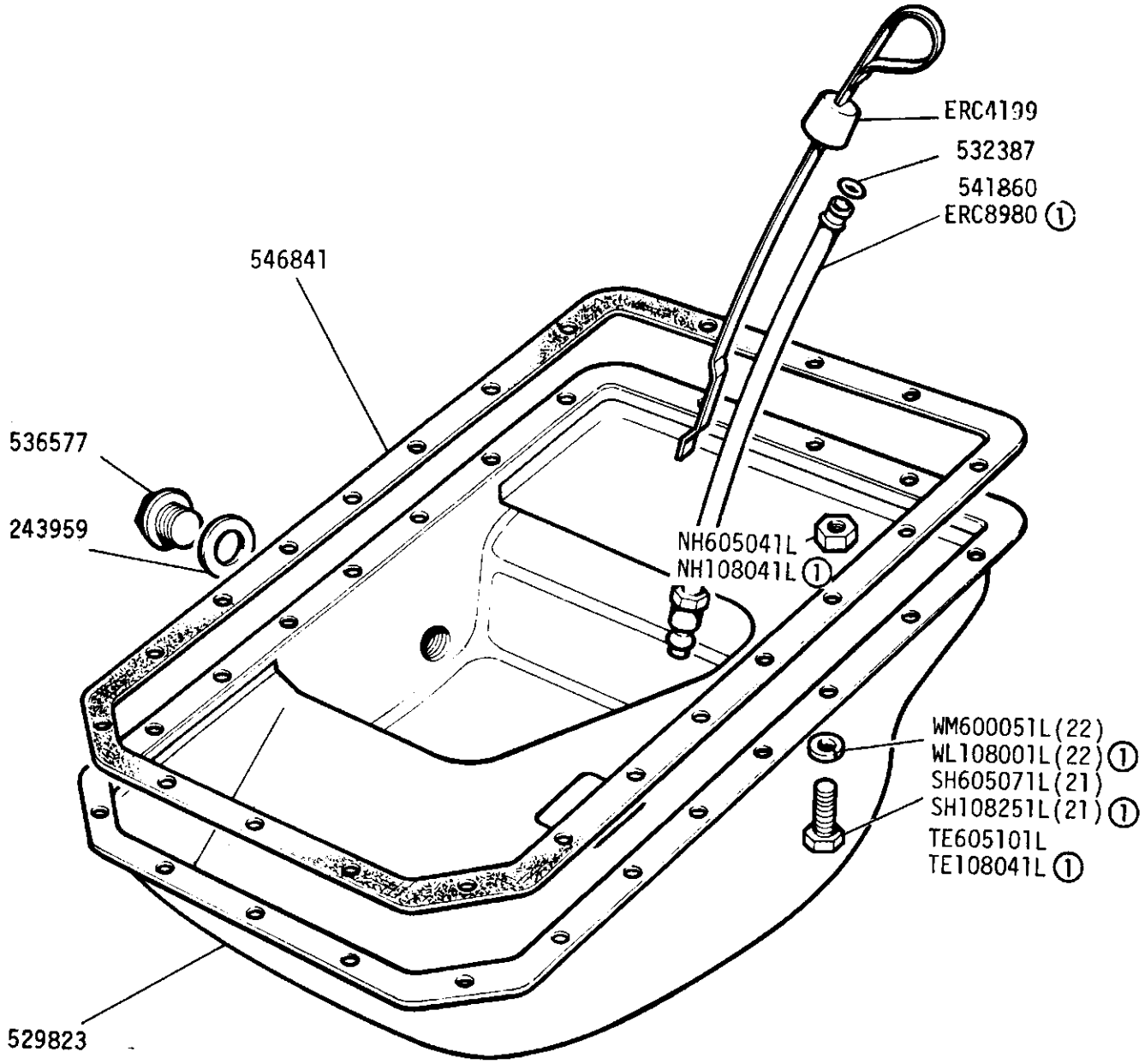

(1) From engine numbers 36123672B, 36407286B

ENGINE - Front Cover 2¼ Litre Petrol

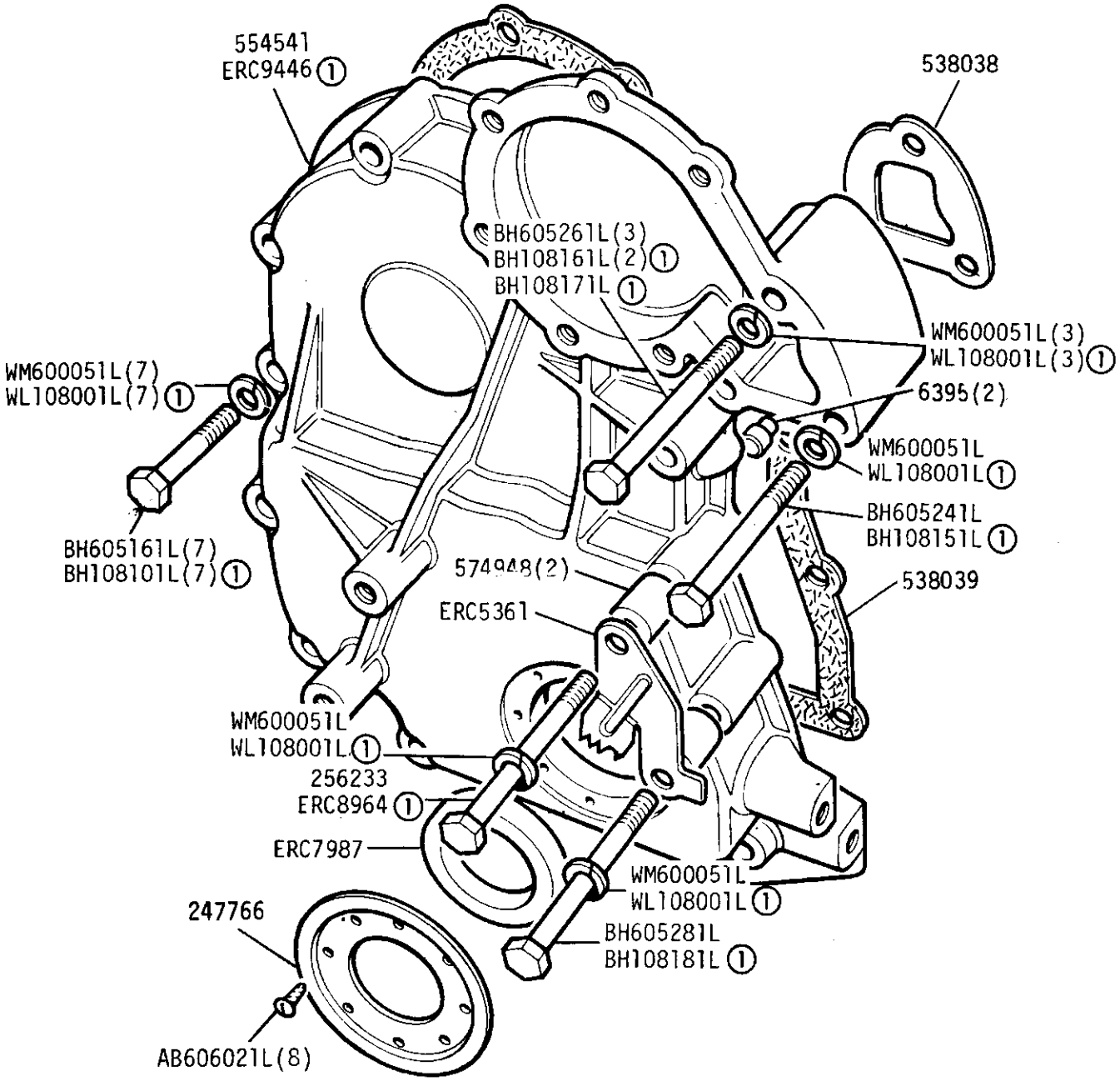

① From engine numbers 36123672B, 36407286B

② Use with washer 4866

GROUP B
ENGINE - Side Cover and Oil Filler 2¼ Litre Petrol

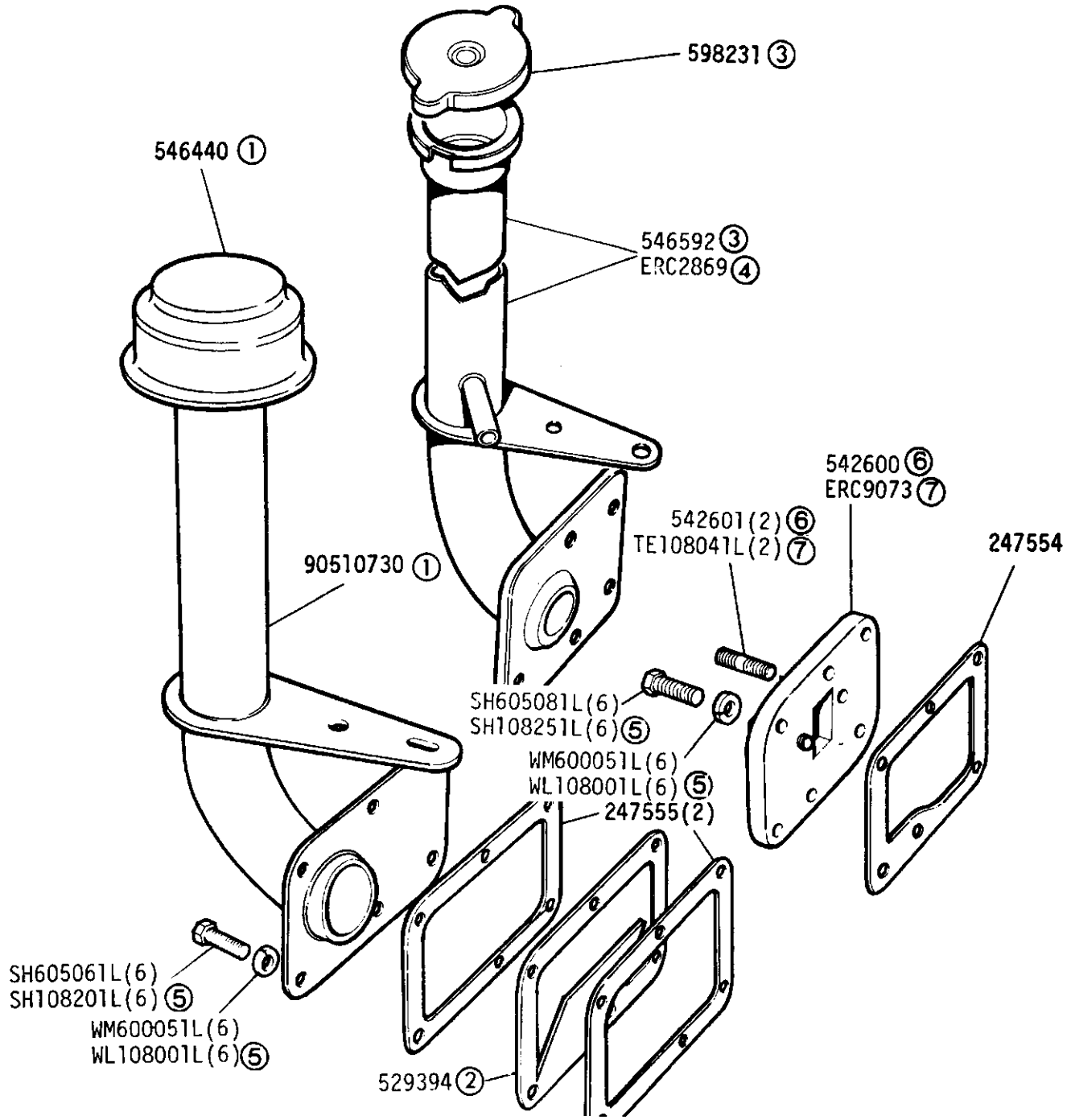

① Up to engine prefix 901 and 904, suffix B inclusive

② Up to engine prefix 901 and 904, suffix D inclusive

③ From engine prefix 901 and 904, suffix C to D inclusive

④ Blanking plate - from engine prefix 901 and 904 suffix E and all engine prefix 361 and 364, the oil filler is in the Rocker cover

⑤ From engine numbers 36123672B and 36407286B

⑥ All engine prefix 901 and 904 and engines prefix 361 and 364 suffix A and B only

⑦ Engine prefix 361 and 364 suffix C onwards

GROUP B

ENGINE - Crankcase Emission Control - 2¼ Litre Petrol Engines Prefixed 901 to 904 Suffix E Onwards and 36116817A Onward

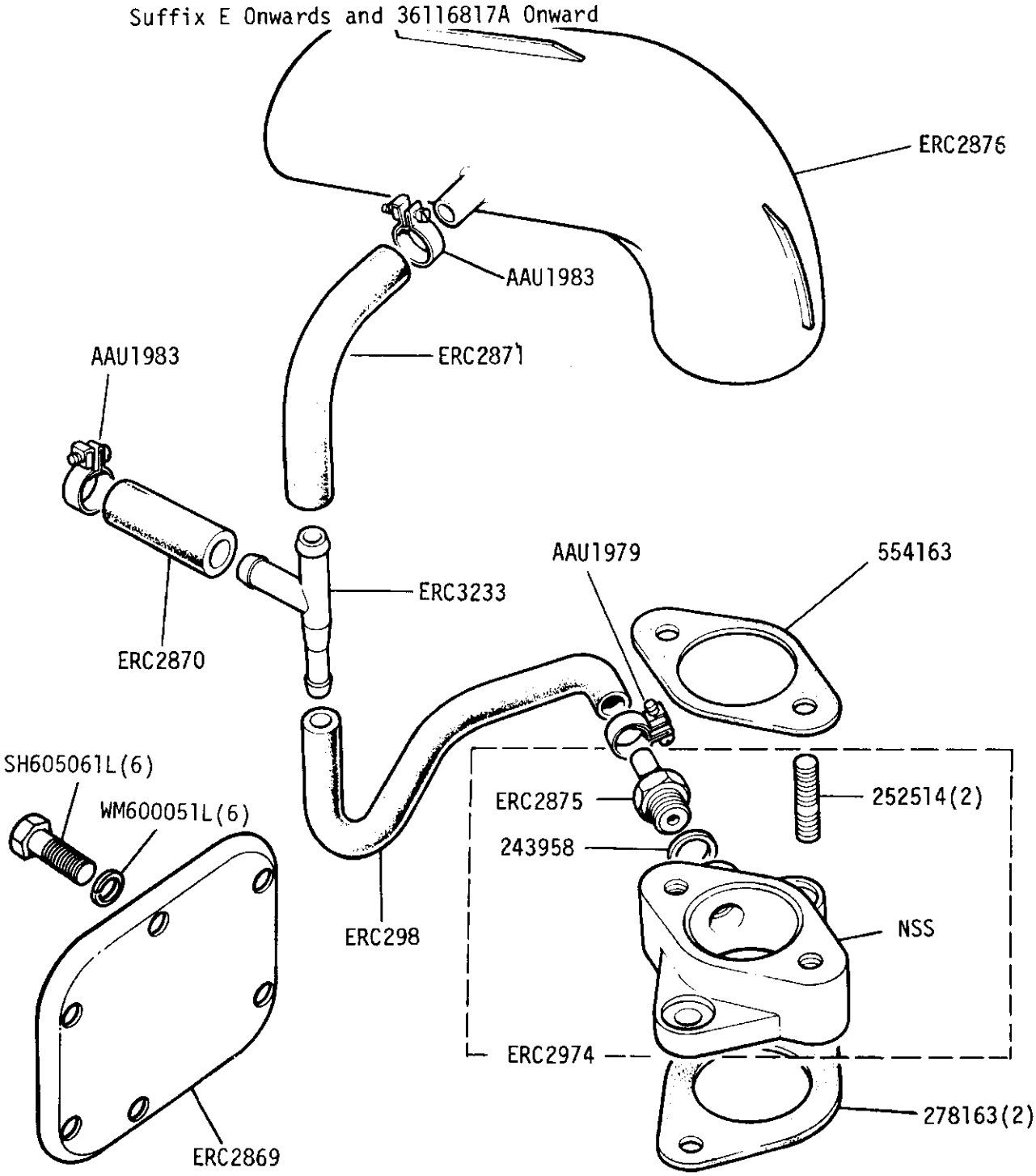

GROUP B

ENGINE - Crankcase Emission Control - 2¼ Litre Petrol Engines Prefixed 901 to 904 Suffix E Onwards and 36116817A Onward

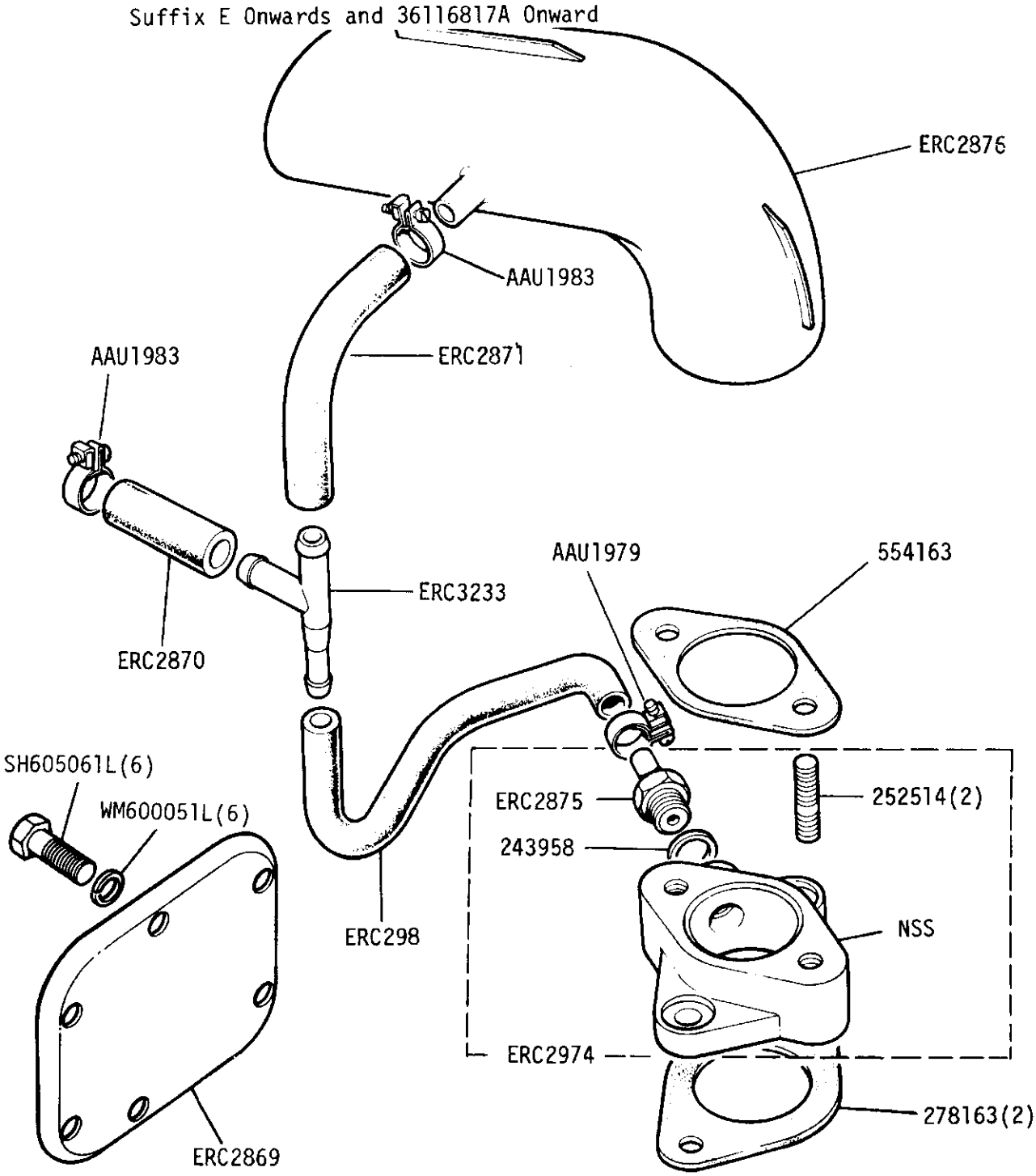

GROUP B

ENGINE - Crankcase emission control 2¼ litre petrol - European detoxed

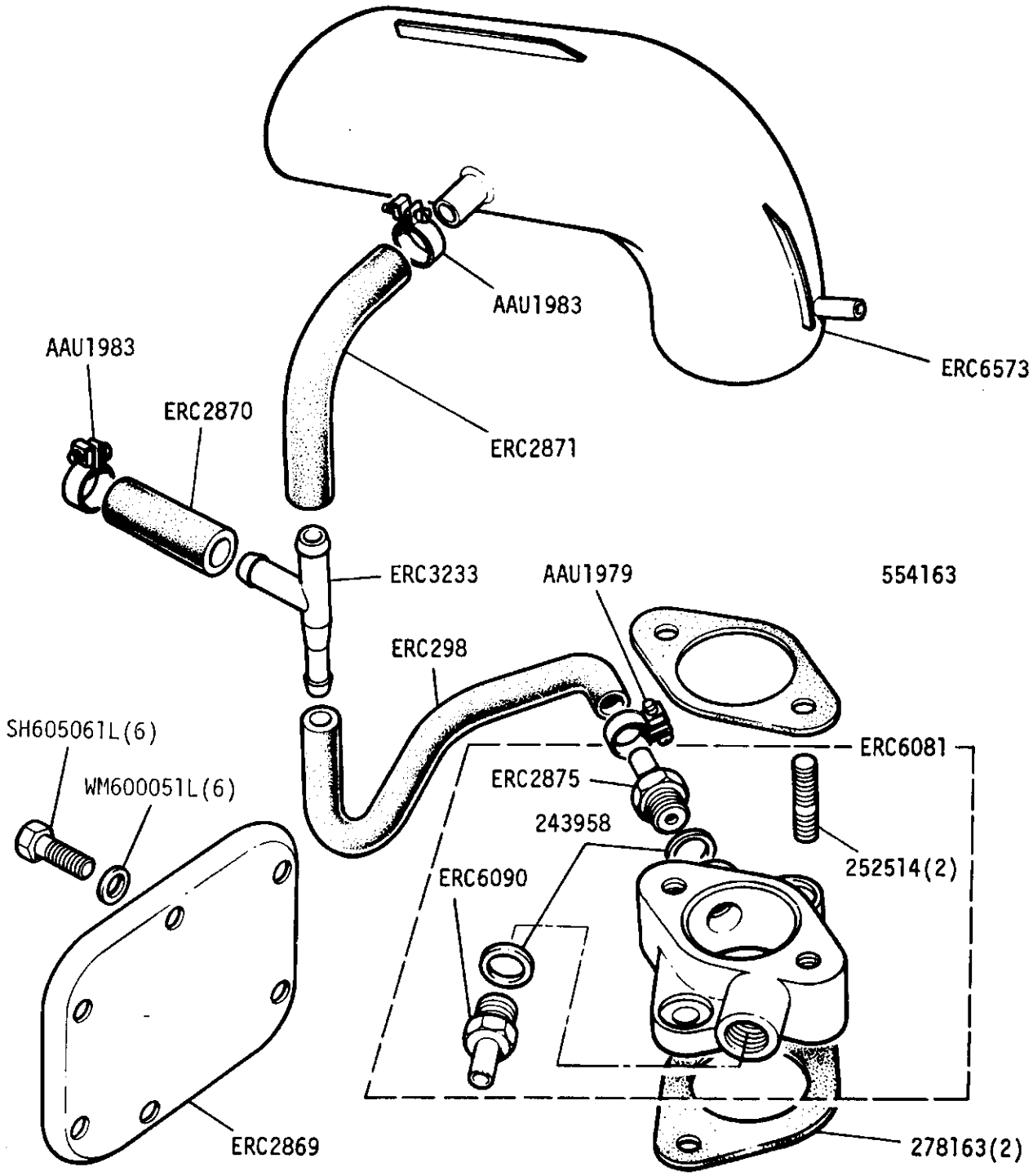

For vehicles built to ECE 15.03 (European detoxed) from July 1980

After vehicle Number 36116817A Reverts to condition shown on previous page

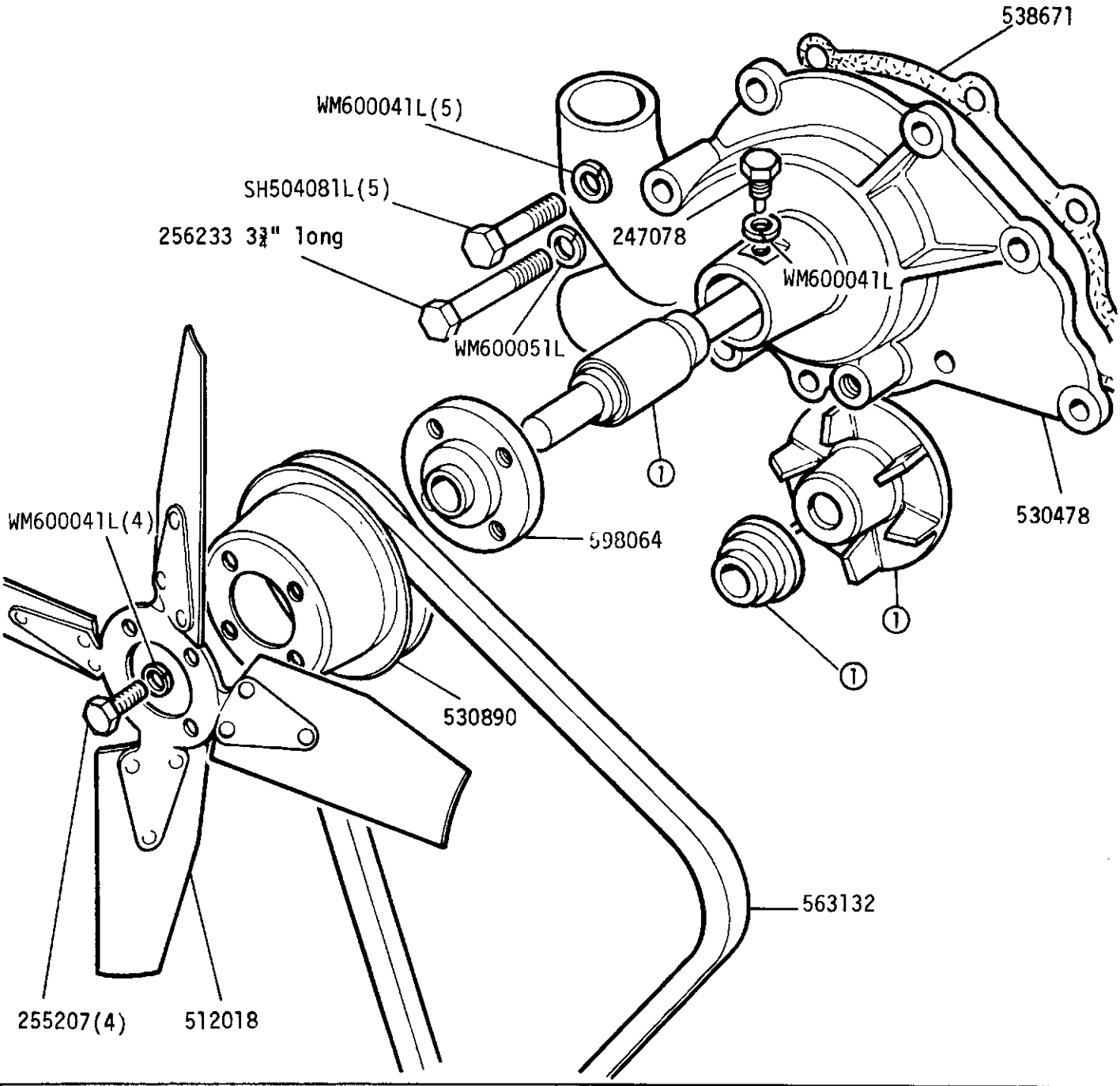

Water pump assembly ERC9178
(1) Water pump overhaul kit RTC3072

GROUP B

ENGINE - Thermostat and Housing 2¼ Litre Petrol

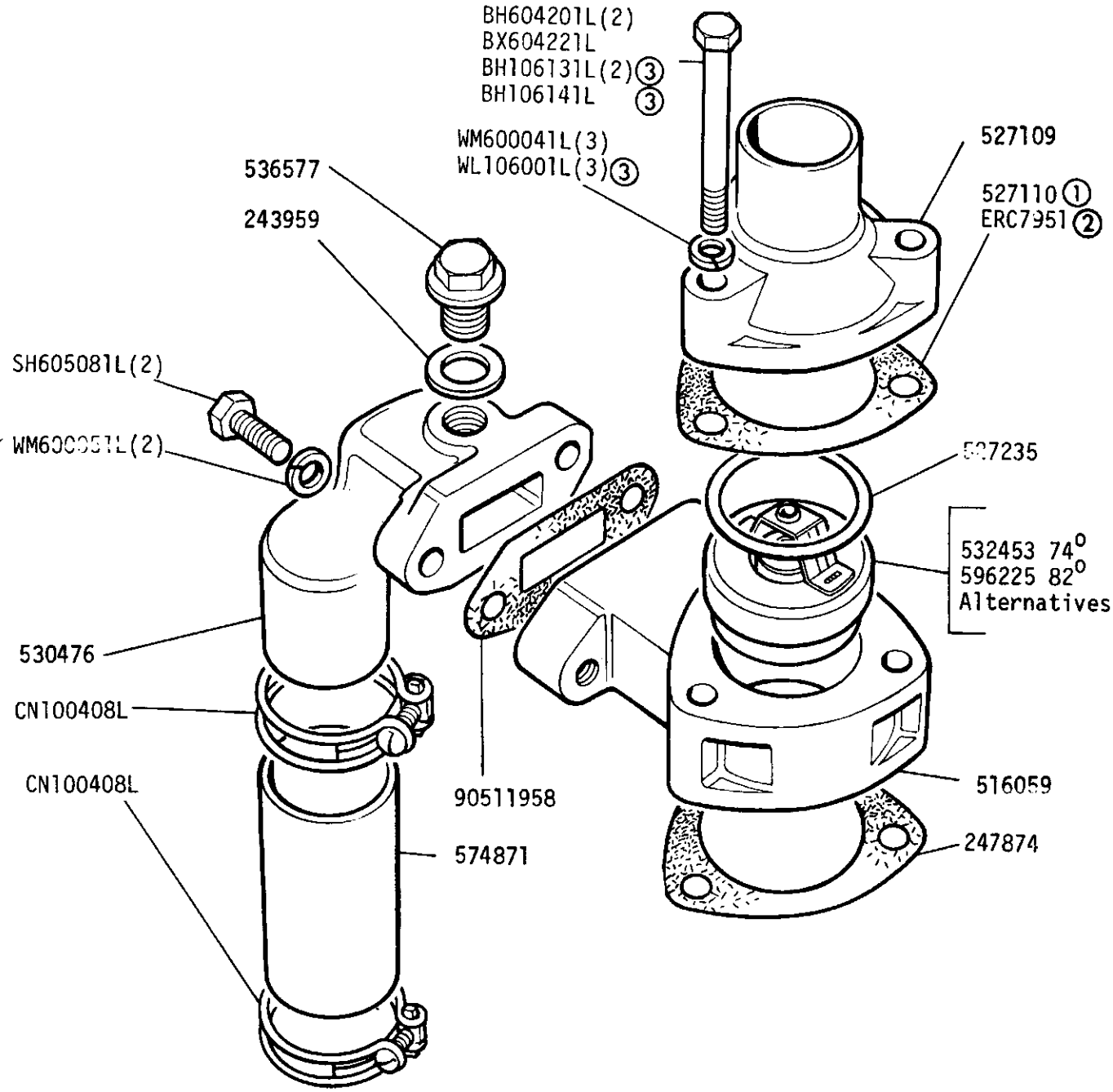

① 3 bearing crankshaft
② 5 bearing crankshaft
③ From engine numbers 36123672B, 36407286B

GROUP B
ENGINE - Cylinder Head 2¼ Litre Petrol

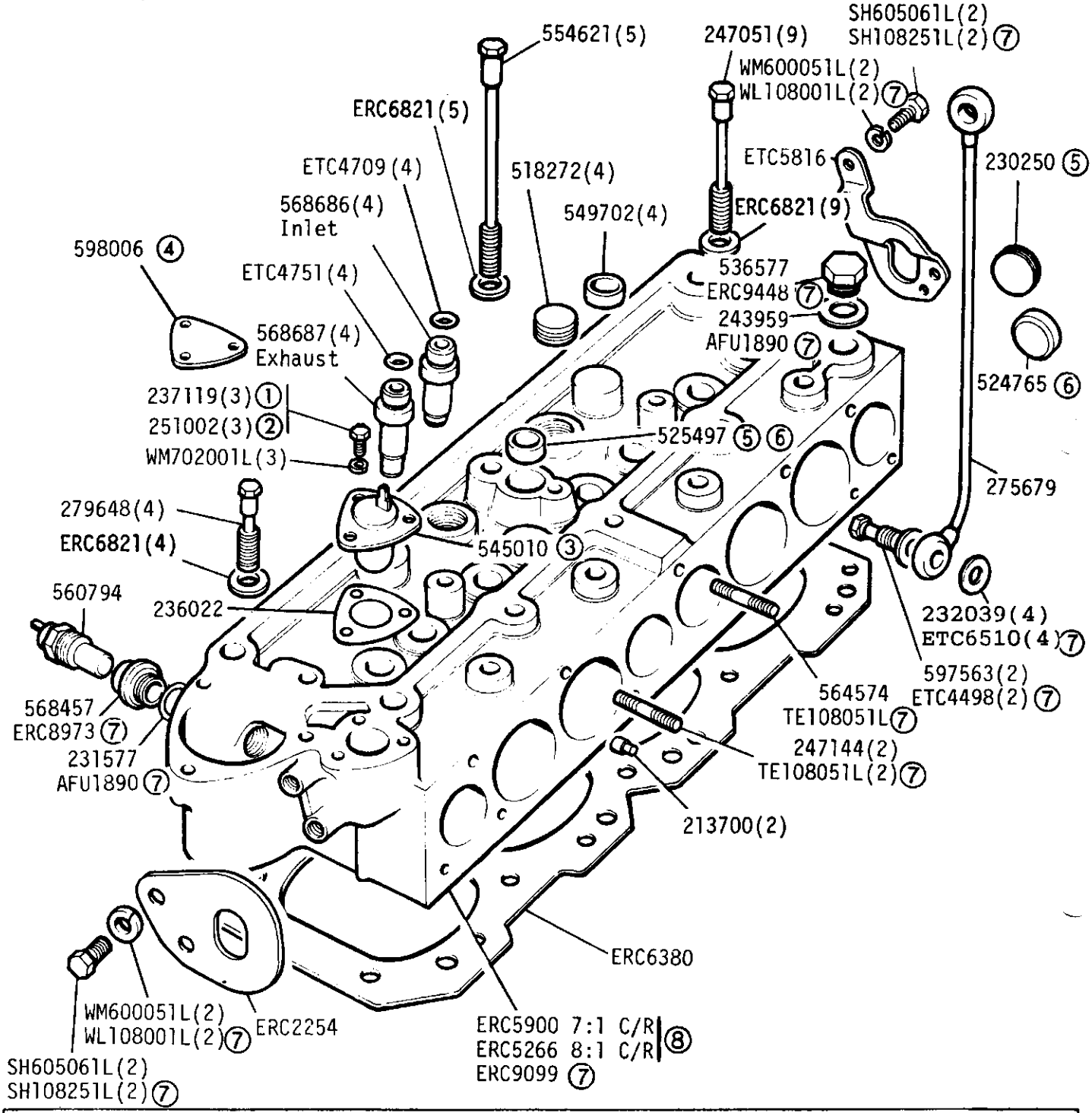

① With choke thermostat switch
② With blanking plate
③ Engines with choke thermostat switch
④ Engines without choke thermostat switch
⑤ Use with cylinder head 568757 and 566703
⑥ Use with cylinder head 598089 and 598086
⑦ From engine numbers 36123672B, 36407286B

Kit for fitting metric cylinder head to imperial cylinder block RTC2955
⑧ 3 bearing engines and suffix A, 5 bearing engines only

GROUP B

ENGINE Rocker Cover - 2¼ Litre Petrol - Engine Prefix 901 to 904
From Suffix E And All Prefix 361 And 364

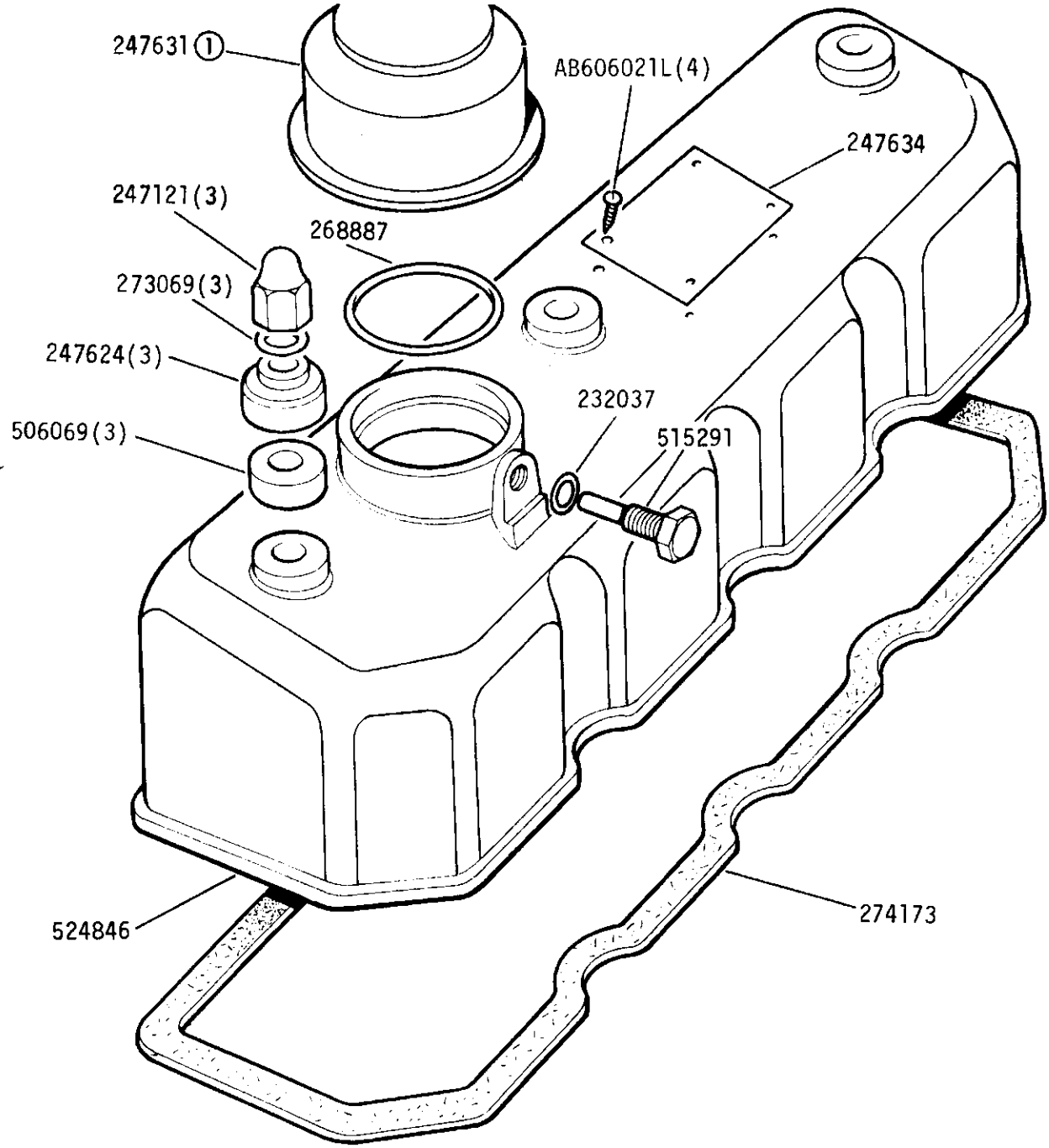

GROUP B

ENGINE - ROCKER COVER - 2¼ Litre Petrol - Engine Prefix 901 to 904
Upto Suffix D Inclusive

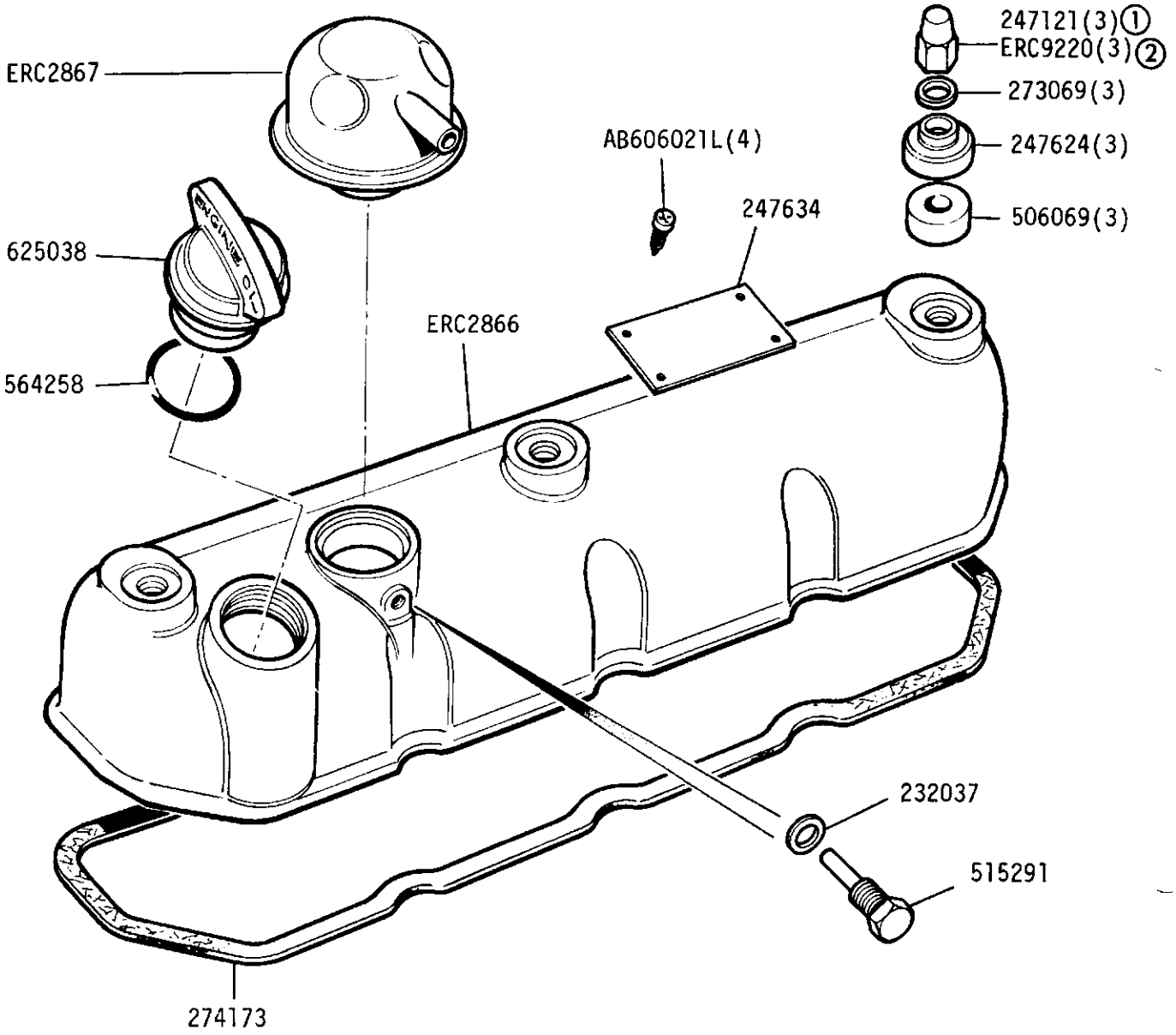

①All engines prefix 901 and 904 suffix E and engines prefix 361 and 364 suffix A and B
②Engine prefix 361 and 364 suffix 'C' onwards

ENGINE - Oil Filter 2¼ Litre Petrol

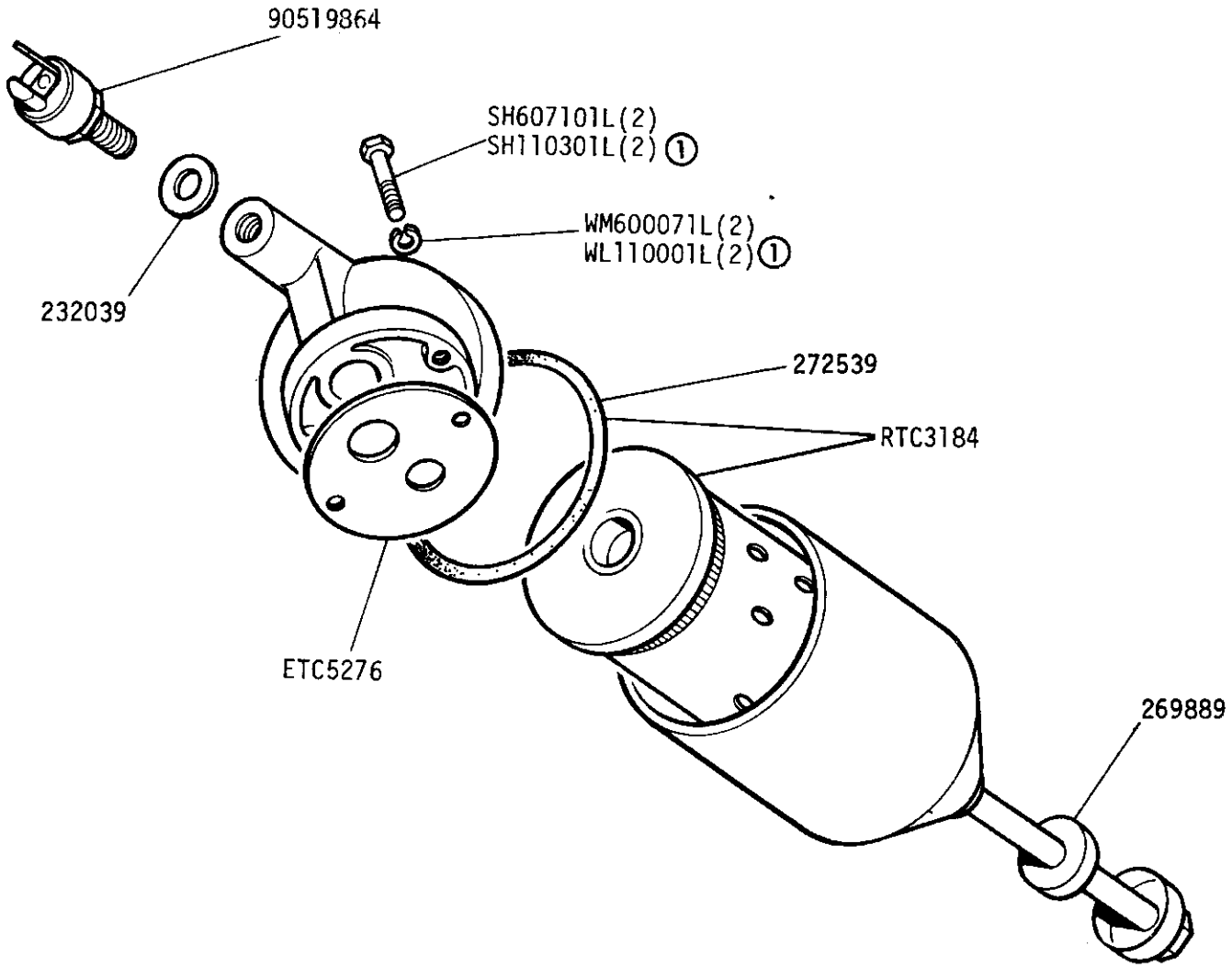

Oil Filter assembly 537229

① From engine numbers 36123672B, 36407286B

GROUP B

ENGINE - Manifolds 2¼ Litre Petrol Except European detoxed

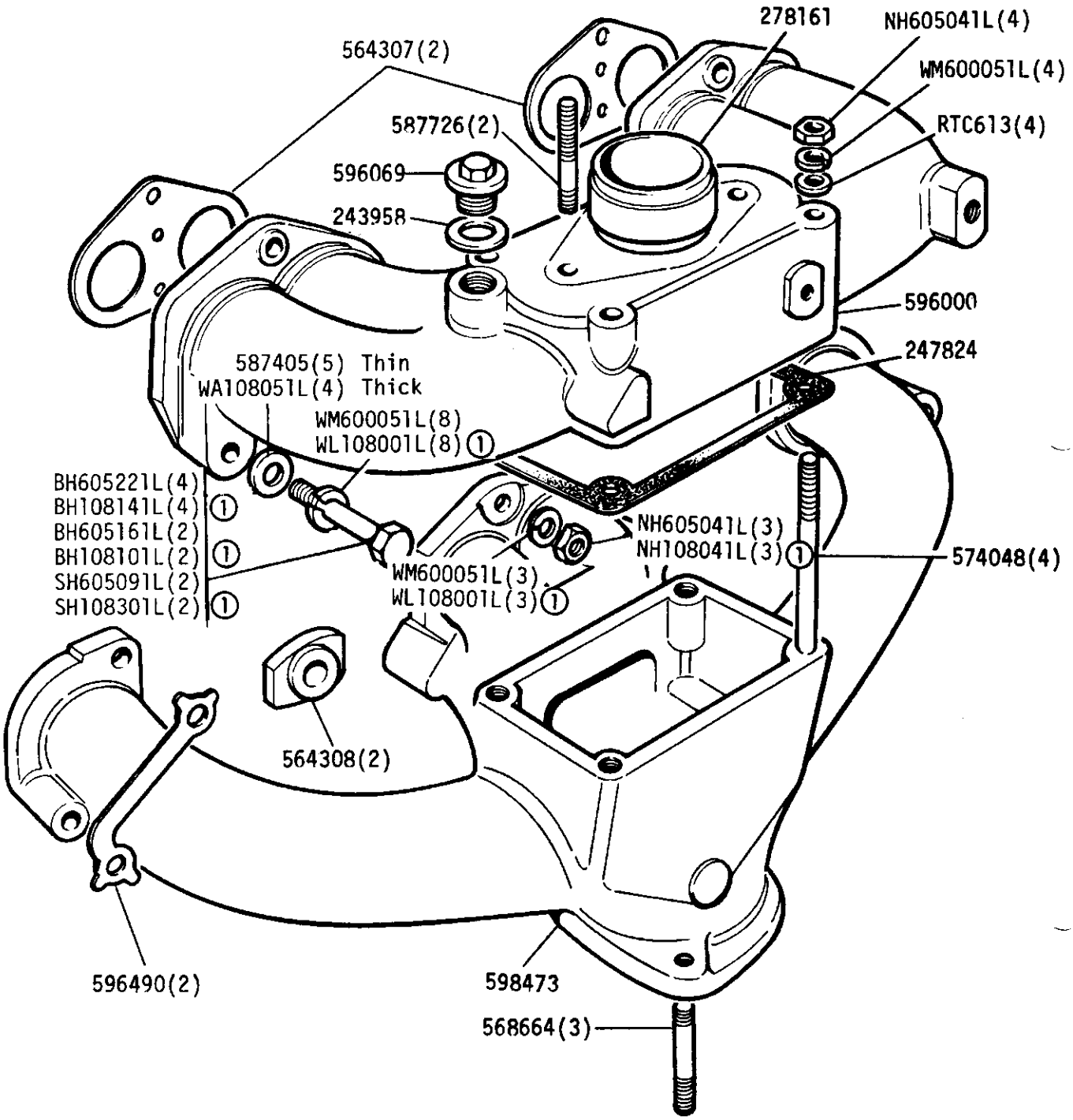

Exhaust manifold fixing kit 606988

① From engine numbers 36123672B, 36407286B

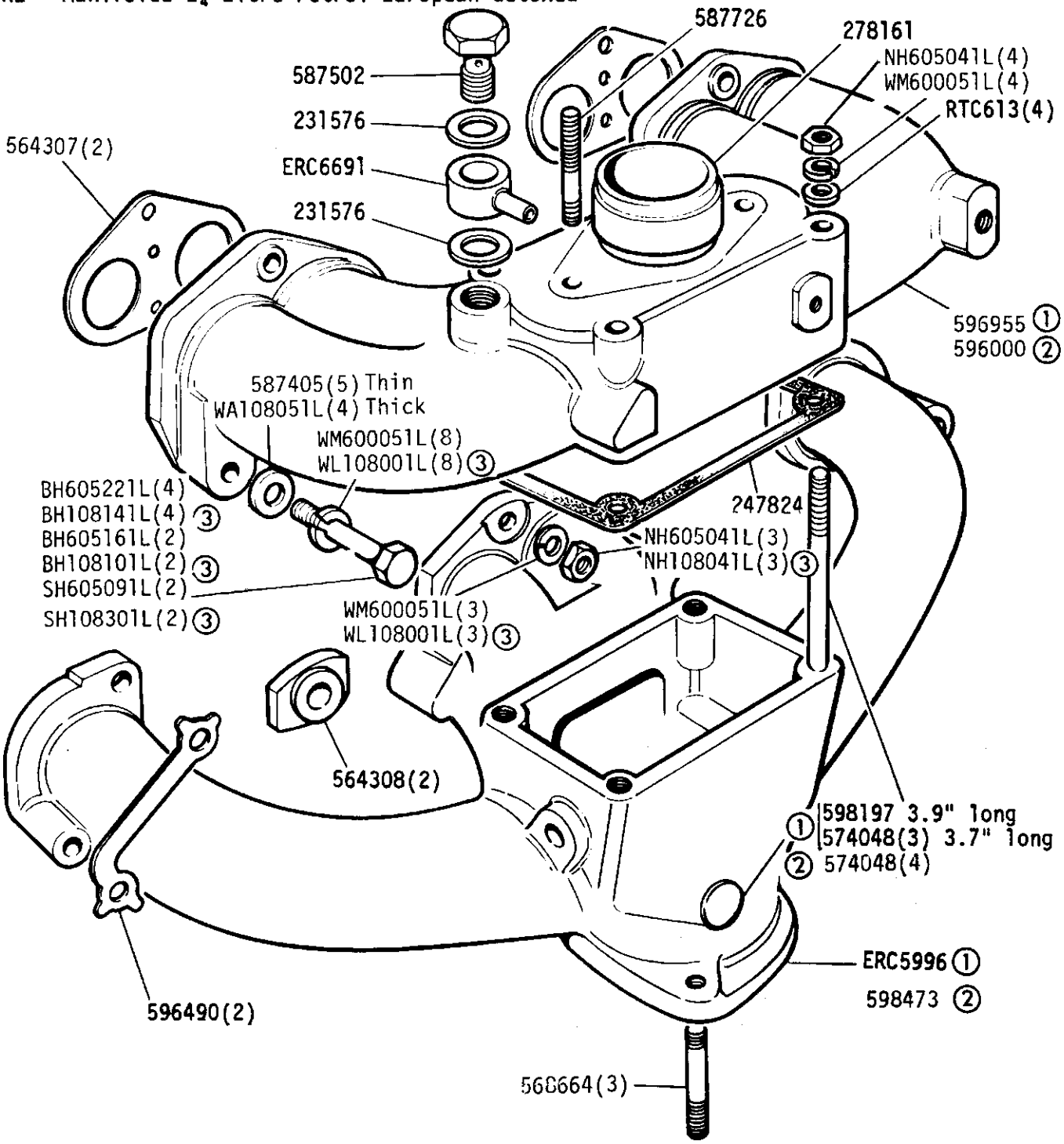

Exhaust manifold fixing kit 606988

Vehicles built to ECE 15-03 (European Regulations)

① Up to vehicle Number 36116817A
② From vehicle Number

③ From engine numbers 36123672B, 36407286B

GROUP H
ENGINE-EGR Valve and pipe - European detoxed 2¼ litre petrol.

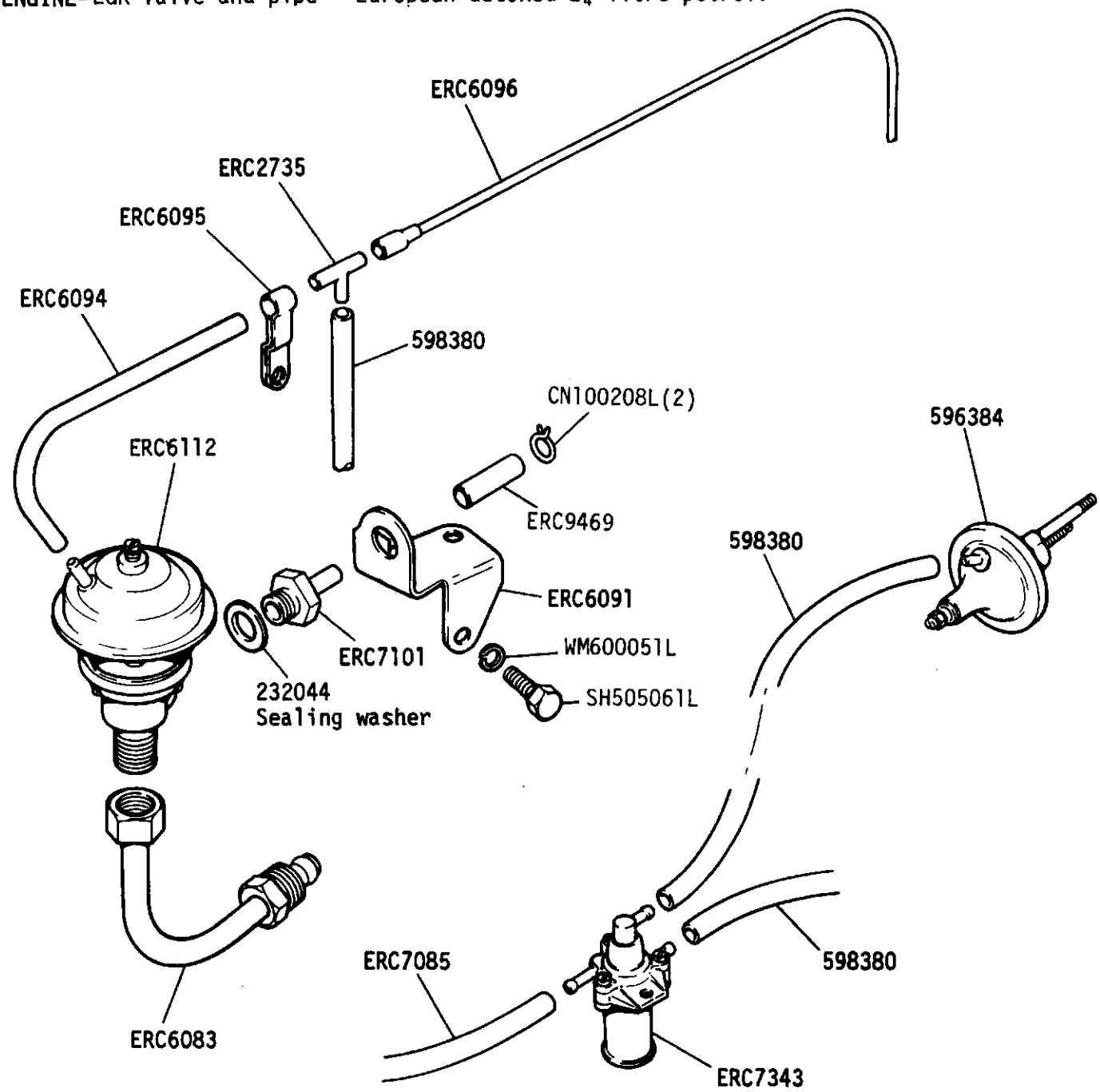

GINE - Mountings and Rubbers 2¼ Litre Petrol

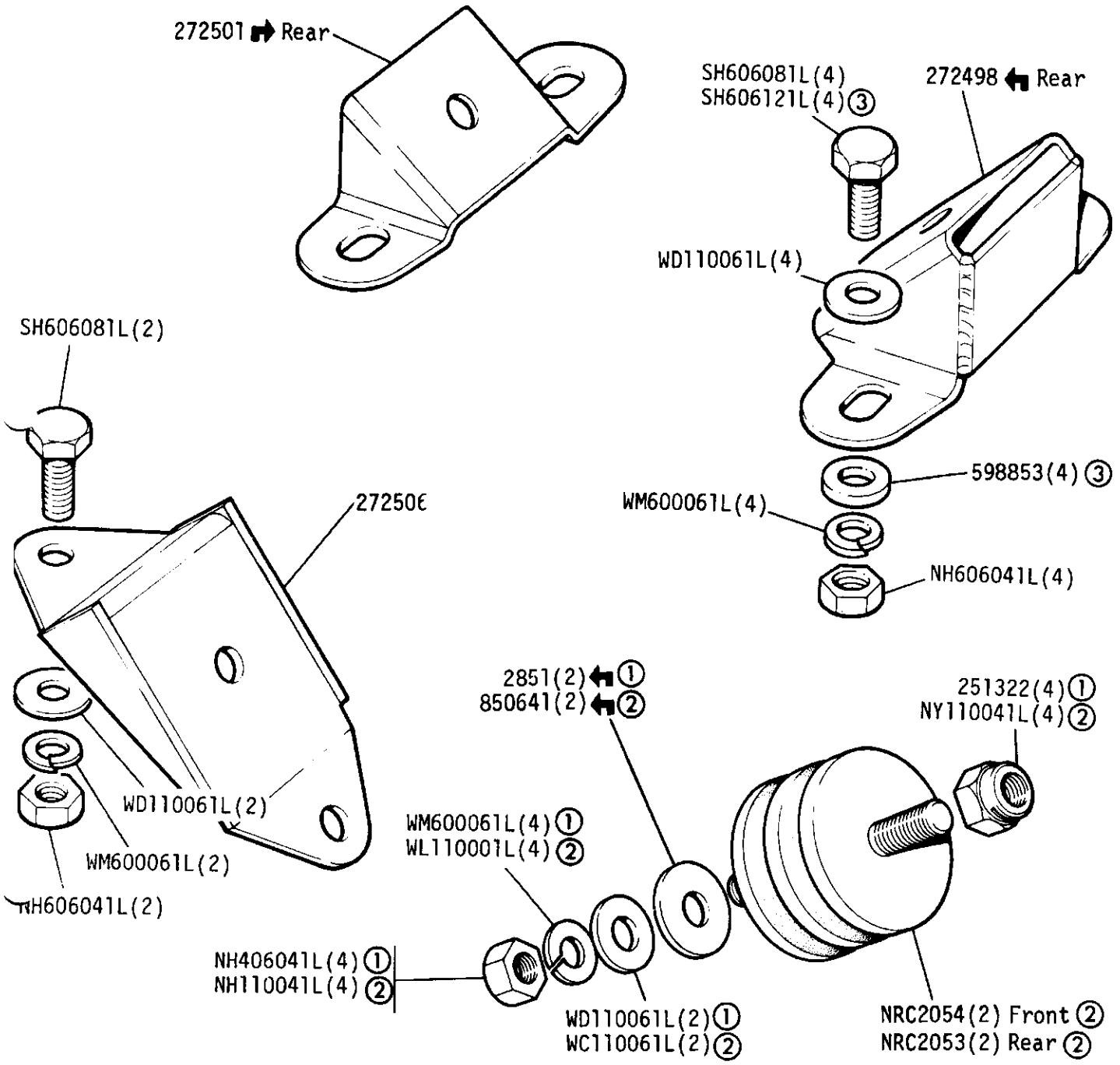

① BSF Fixings
② Metric Fixings
③ 109in 1 Ton

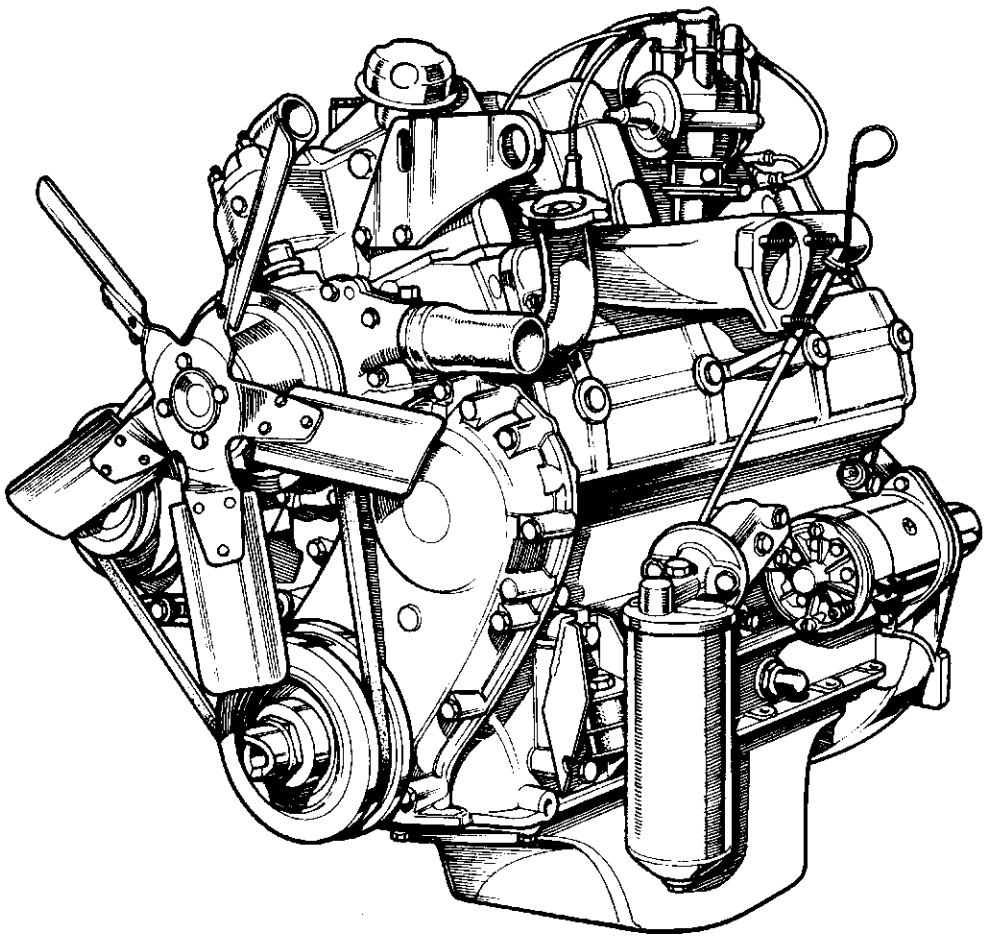

Engine complete assembly 7.0:1 N.L.S

Engine complete assembly 7.8:1 RTC2475N Detoxed

Complete with all ancillaries except flywheel and clutch

GROUP B
ENGINE - Cylinder Block 2.6 Litre Petrol

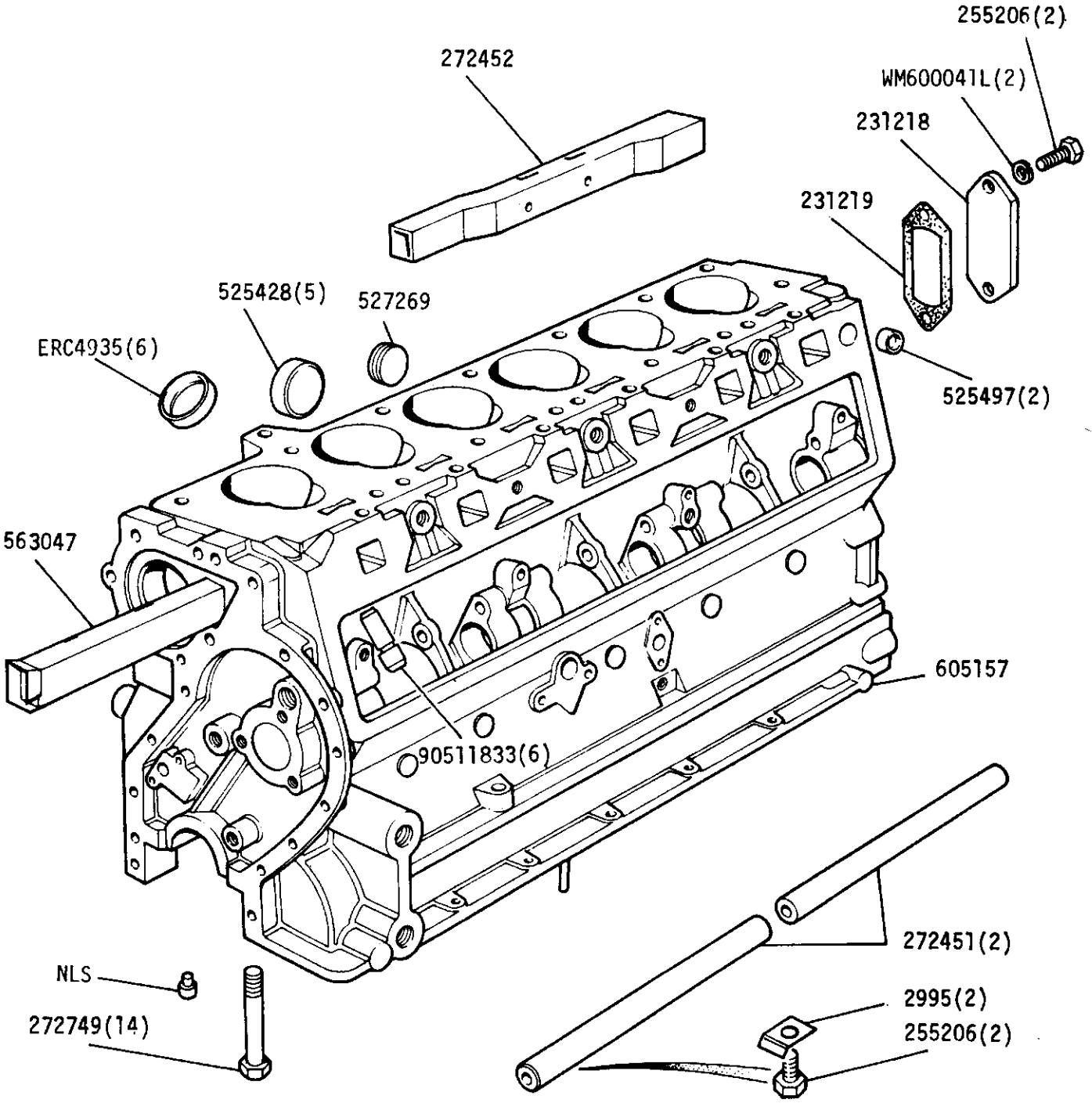

Stripped engine assembly new 7.0:1 RTC2407N
Stripped engine assembly new 7.8:1 NLA
Stripped engine assembly rebuilt 7.8:1 RTC2388R
Short engine 7.0:1 RTC2643
Short engine 7.8:1 RTC2642
Stud and dowel kit for cylinder block 535708
Cylinder liner 516498(6)
Engine overhaul gasket kit 605106
Decarbonising gasket kit RTC3333

GROUP B

NGINE - Cylinder Block Fixings 2.6 Litre Petrol

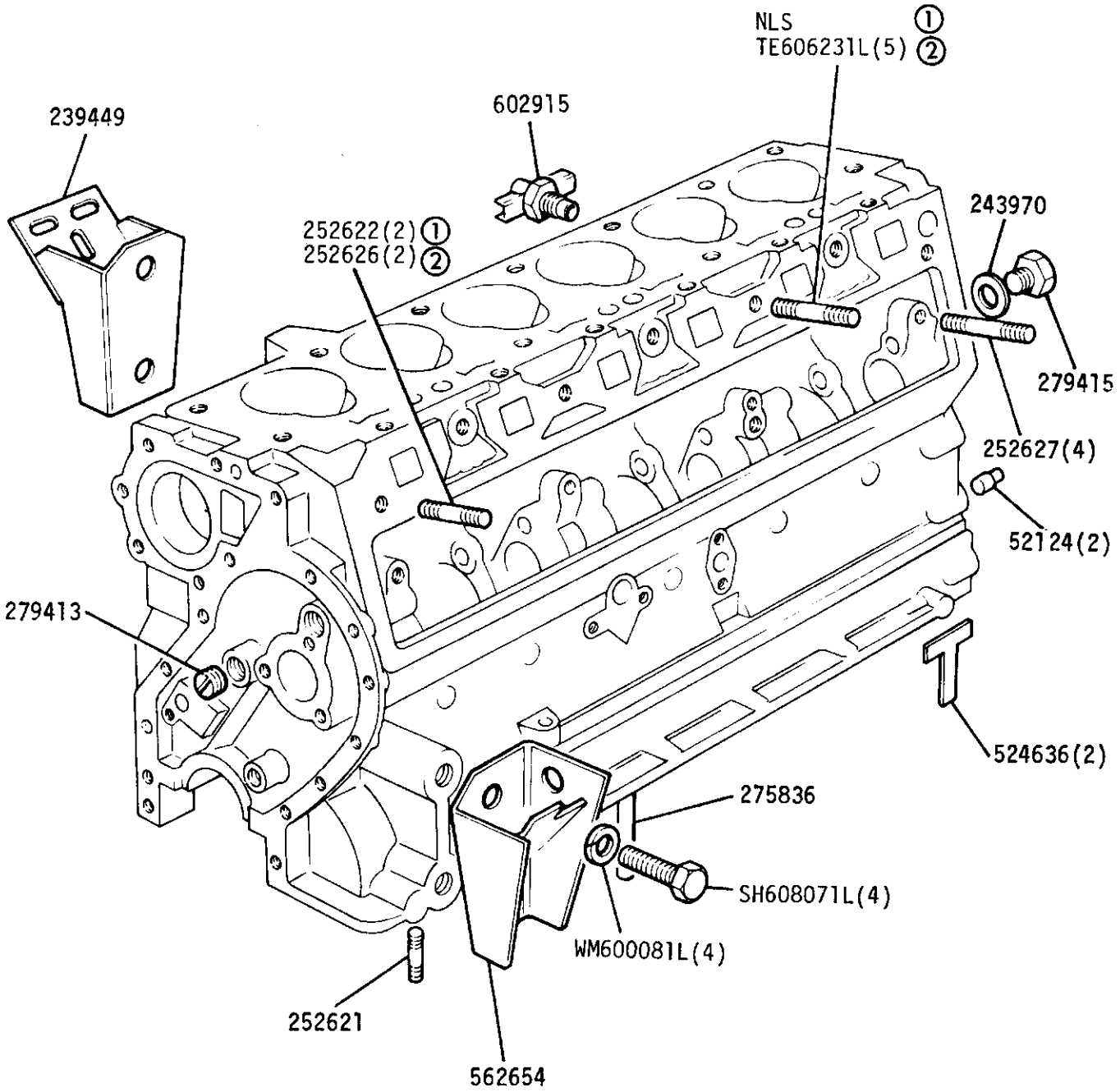

①Up to Engine suffix 'B' inclusive
②From Engine suffix 'C' onwards

GROUP B

ENGINE - Crankshaft 2.6 Litre Petrol.

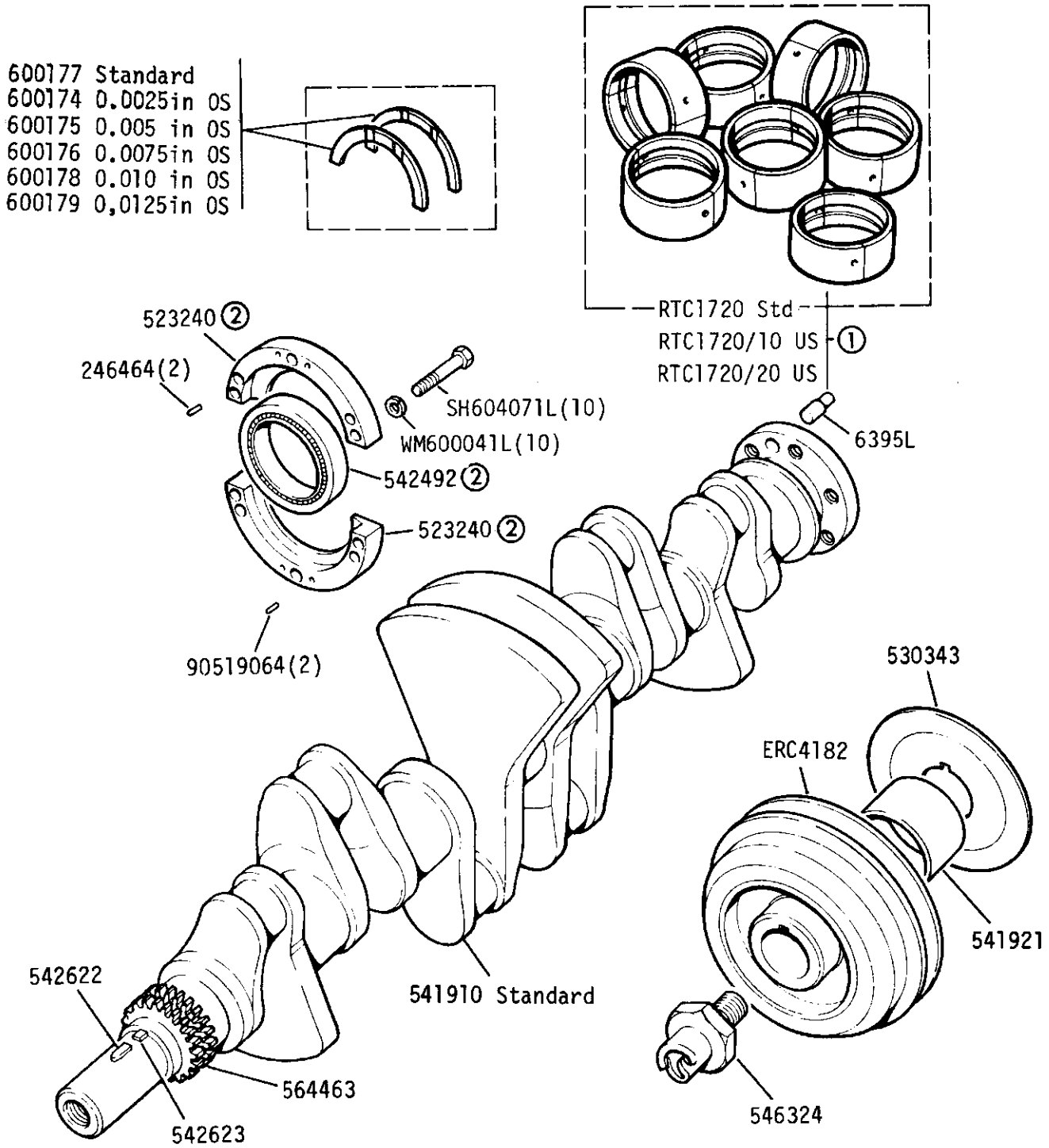

① Engine Set

② Crankshaft oil seal and retainer assembly 542494 includes silicone grease 270656

GROUP B

ENGINE - Crankshaft 2.6 Litre Petrol.

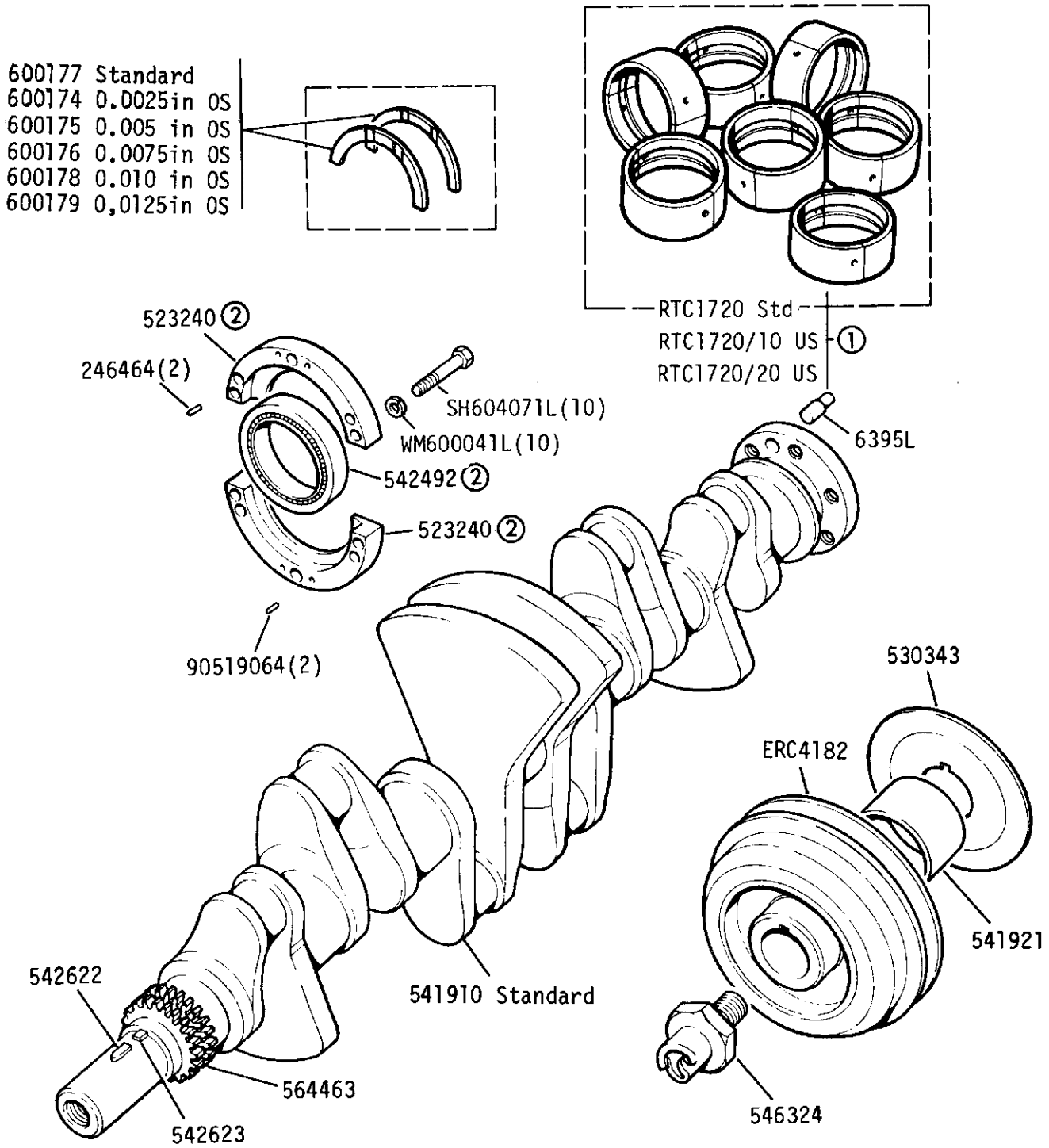

① Engine Set

② Crankshaft oil seal and retainer assembly 542494 includes silicone grease 270656

ENGINE - Oil Pump Body and Release Valve 2.6 Litre Petrol

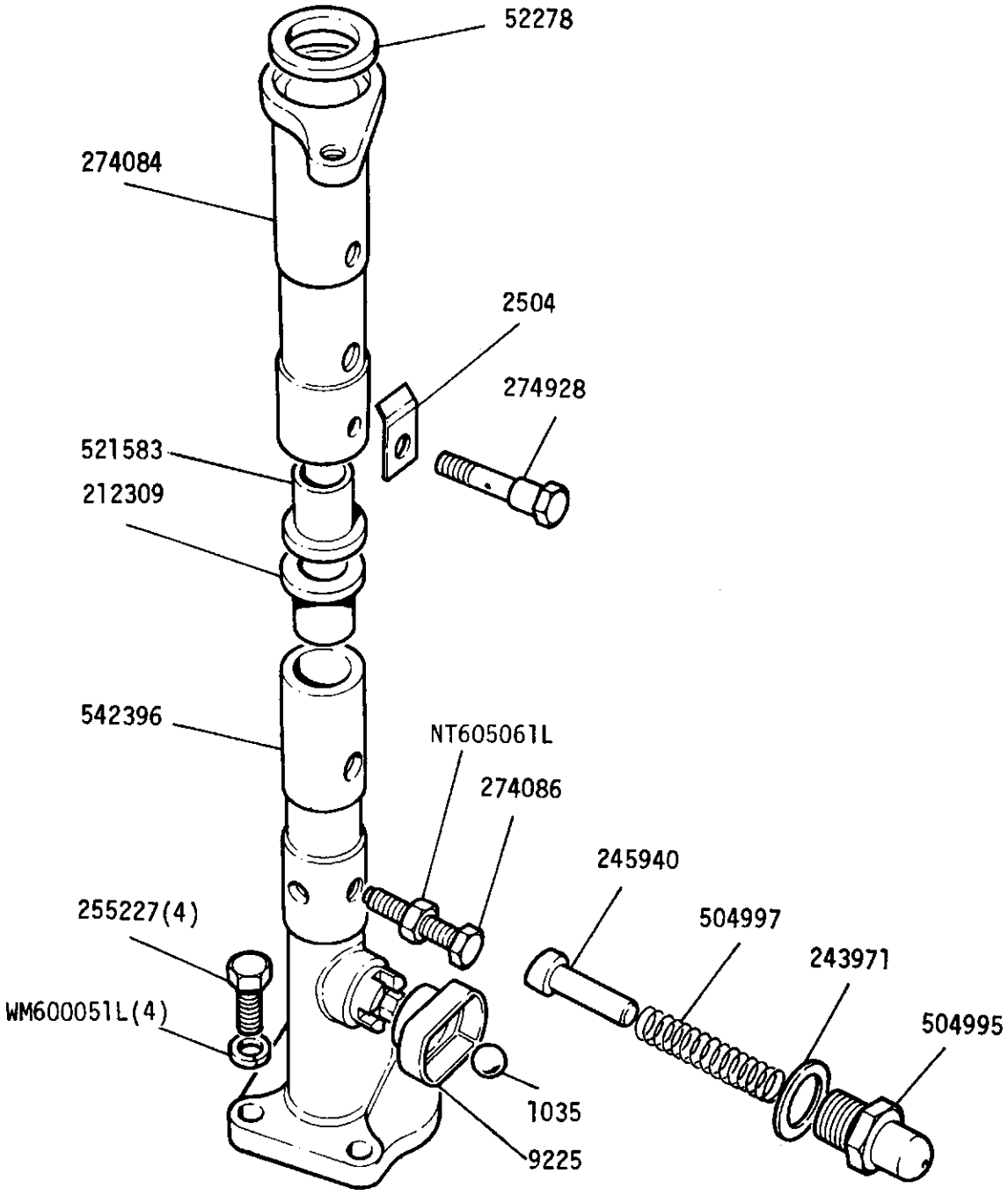

Oil pump assembly 90564334
Assembly does not include drive shafts on adjacent frame

ENGINE - Oil Pump Gears, Drive Shaft and Body, 2.6 Litre Petrol

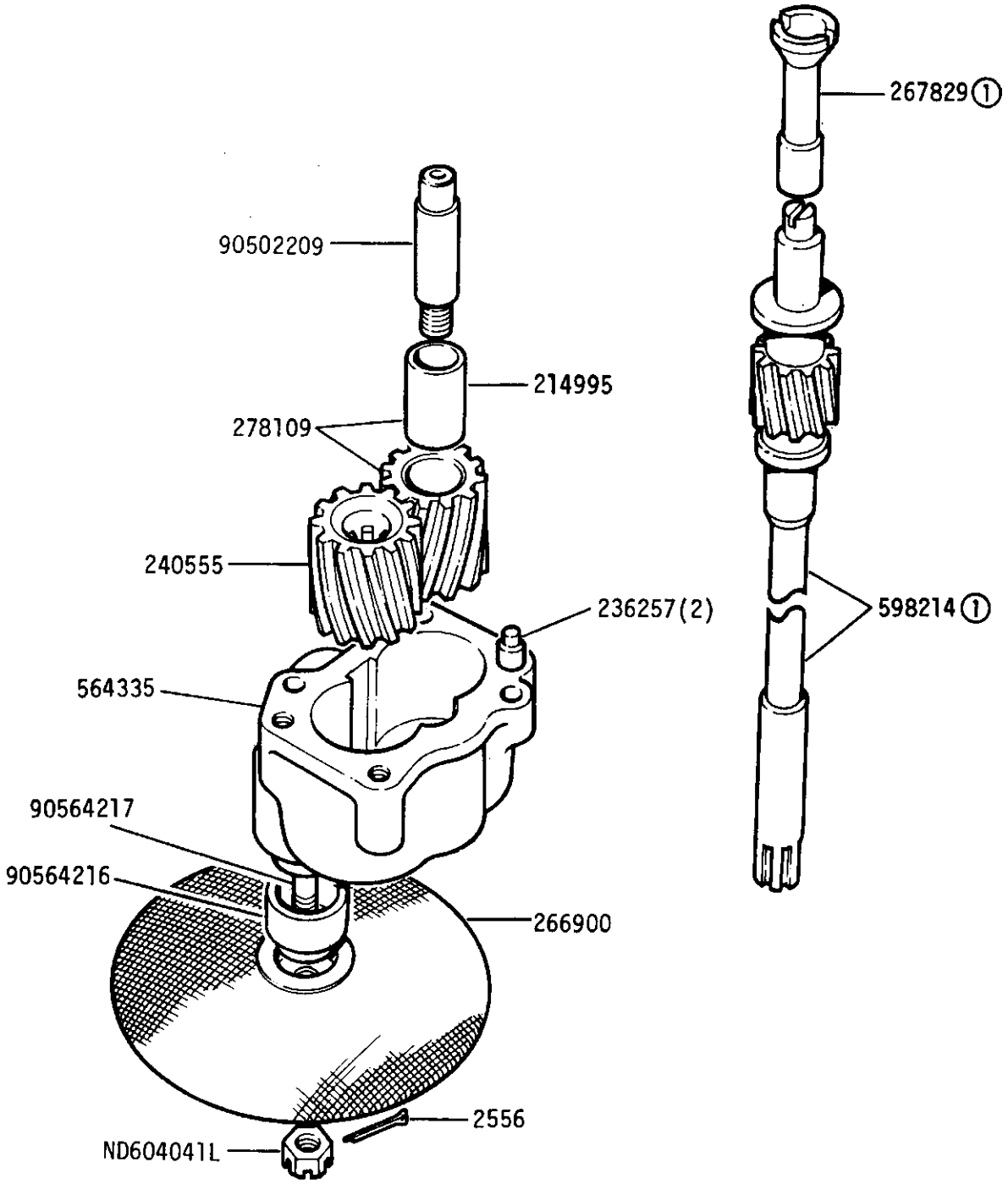

Oil pump assembly 90564334

① Assembly does not include drive shafts

GROUP B

ENGINE - Camshaft Chain and Chainwheel 2.6 Litre Petrol

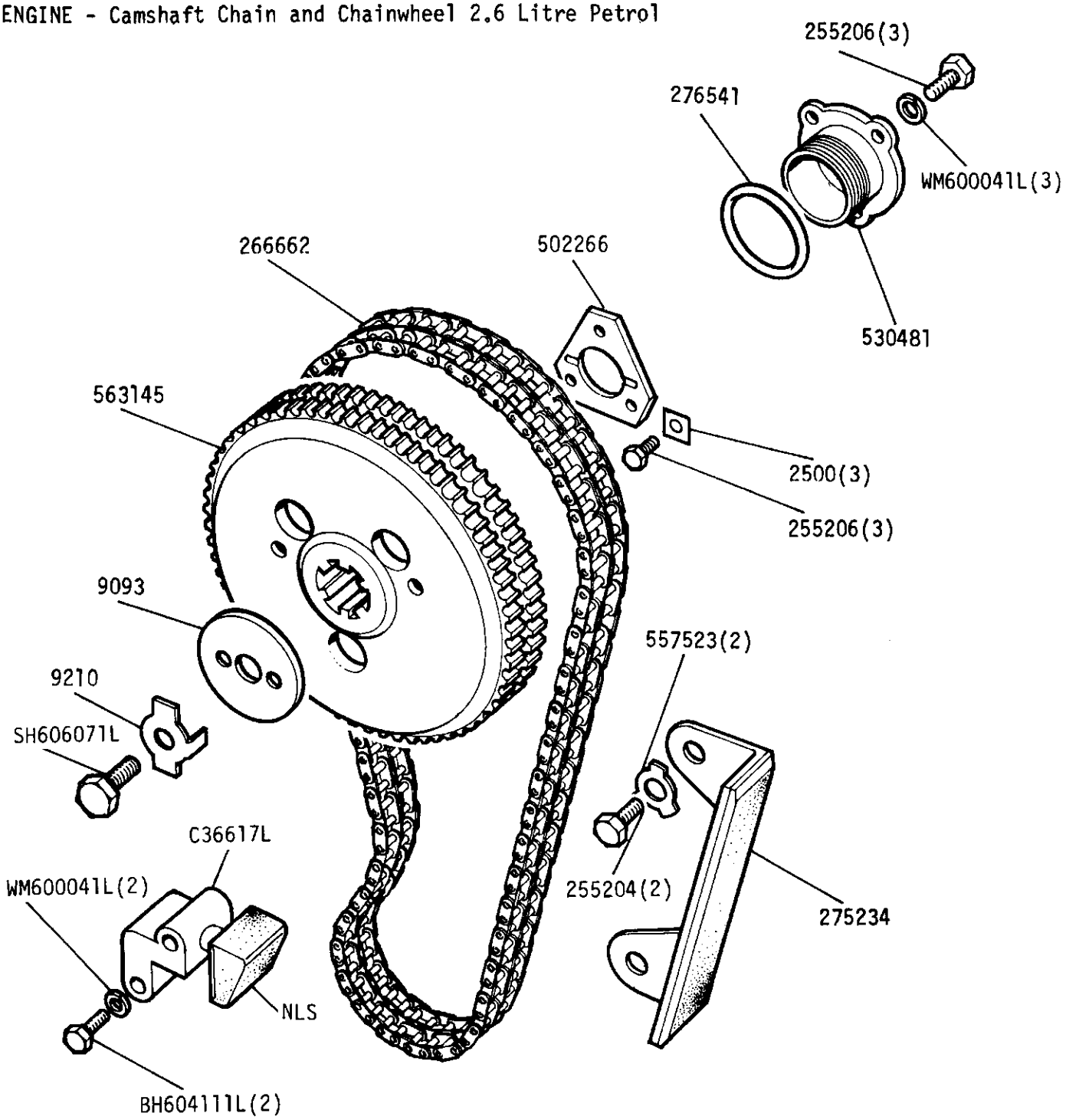

GROUP B

ENGINE - Camshaft 2.6 Litre Petrol

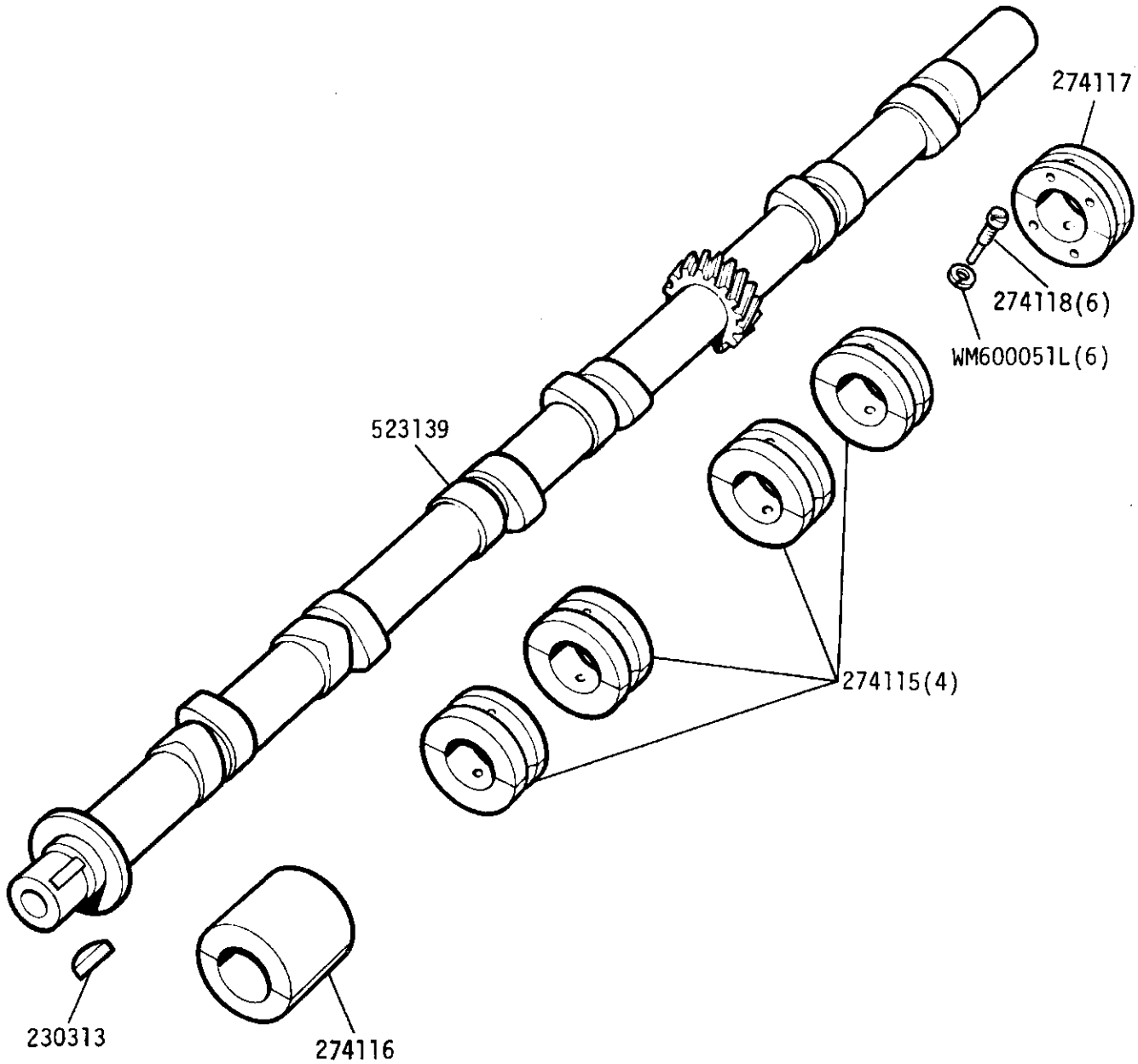

GROUP B

ENGINE - Valves and Push Rods 2.6 Litre Petrol

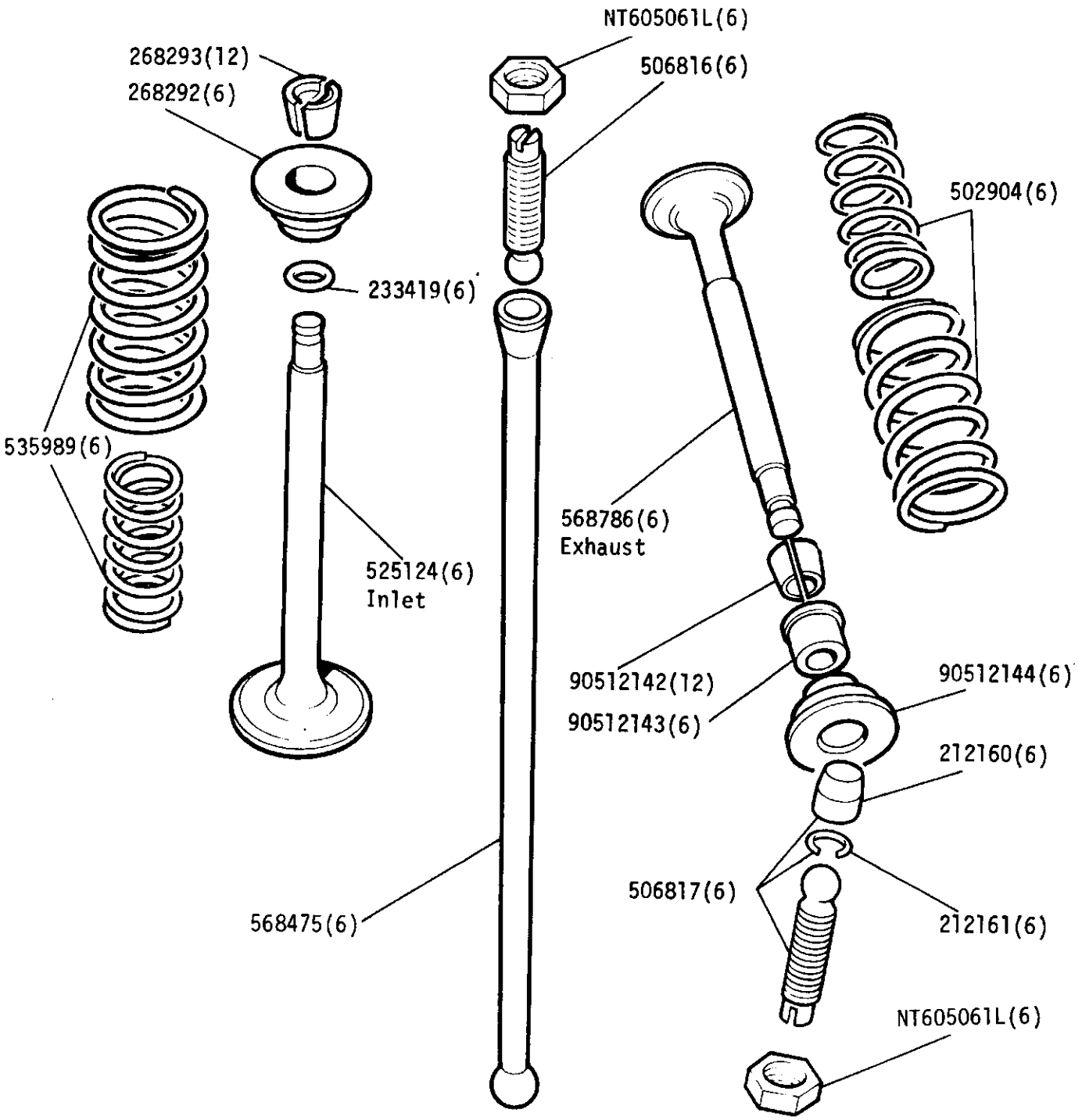

GROUP B

ENGINE - Inlet Valve Rockers 2.6 Litre Petrol

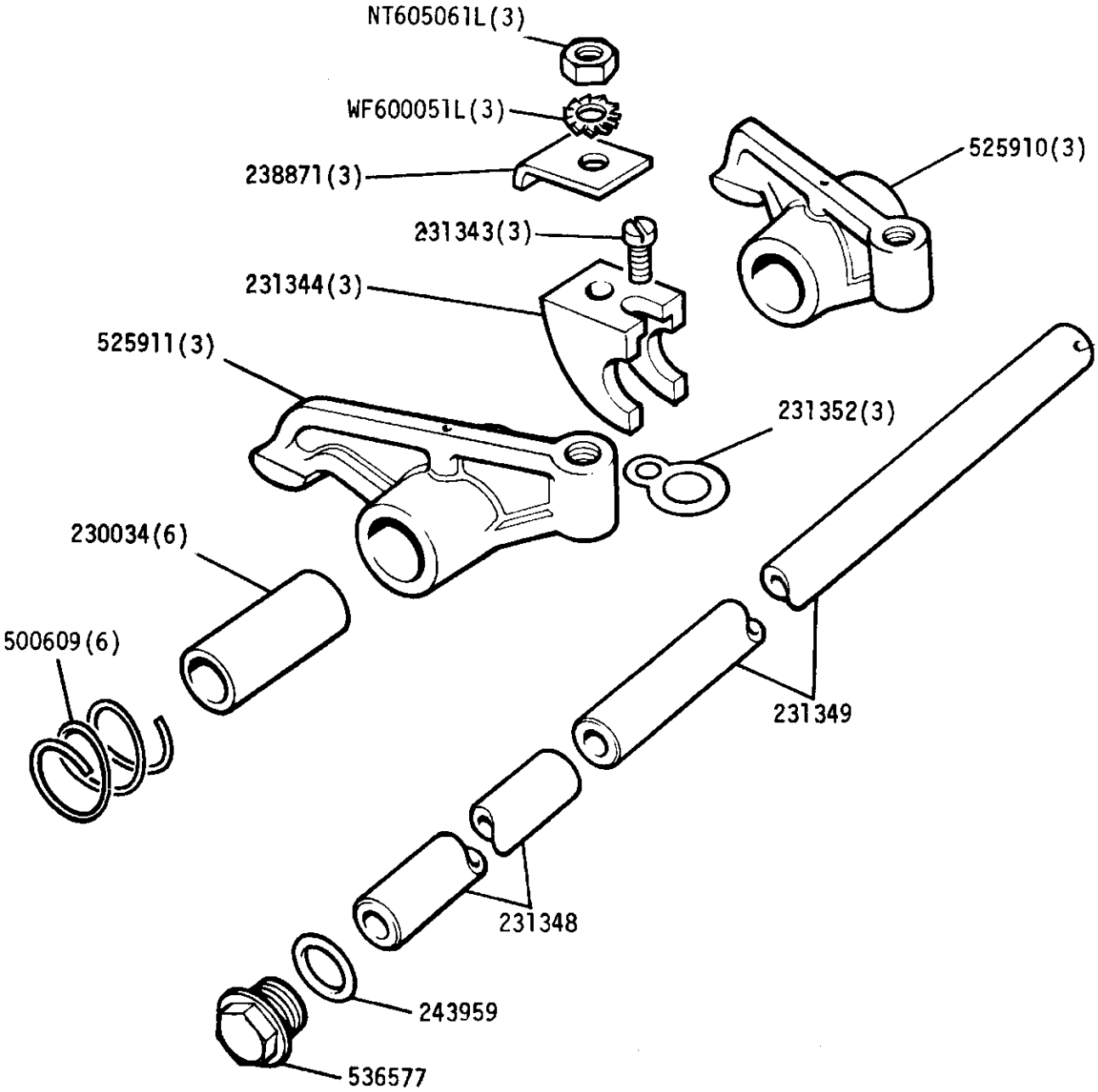

GROUP B

ENGINE - Exhaust Valve Rockers and Inlet Cam Followers 2.6 Litre Petrol

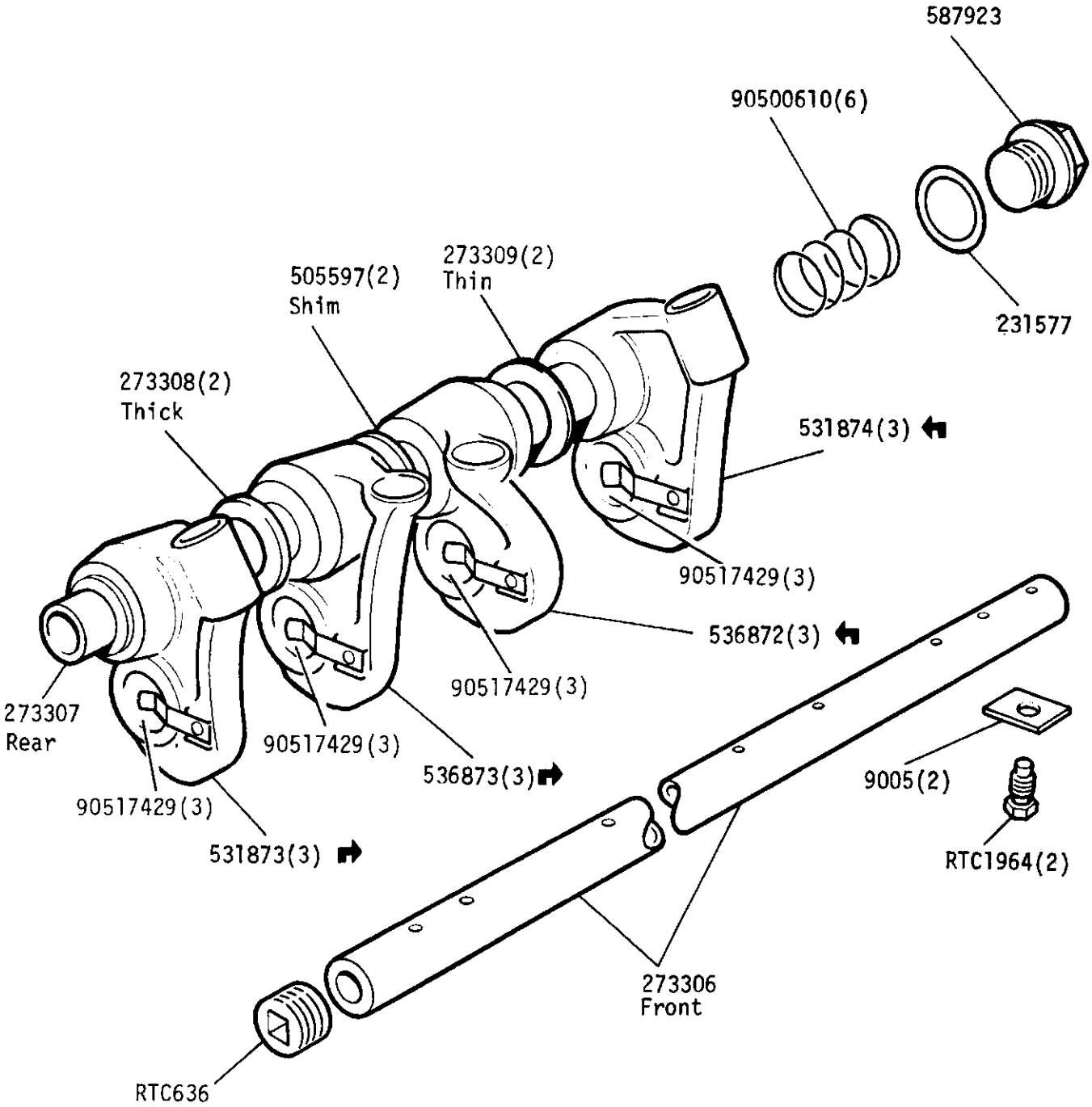

GROUP B

ENGINE - Side Cover and Sump 2.6 Litre Petrol

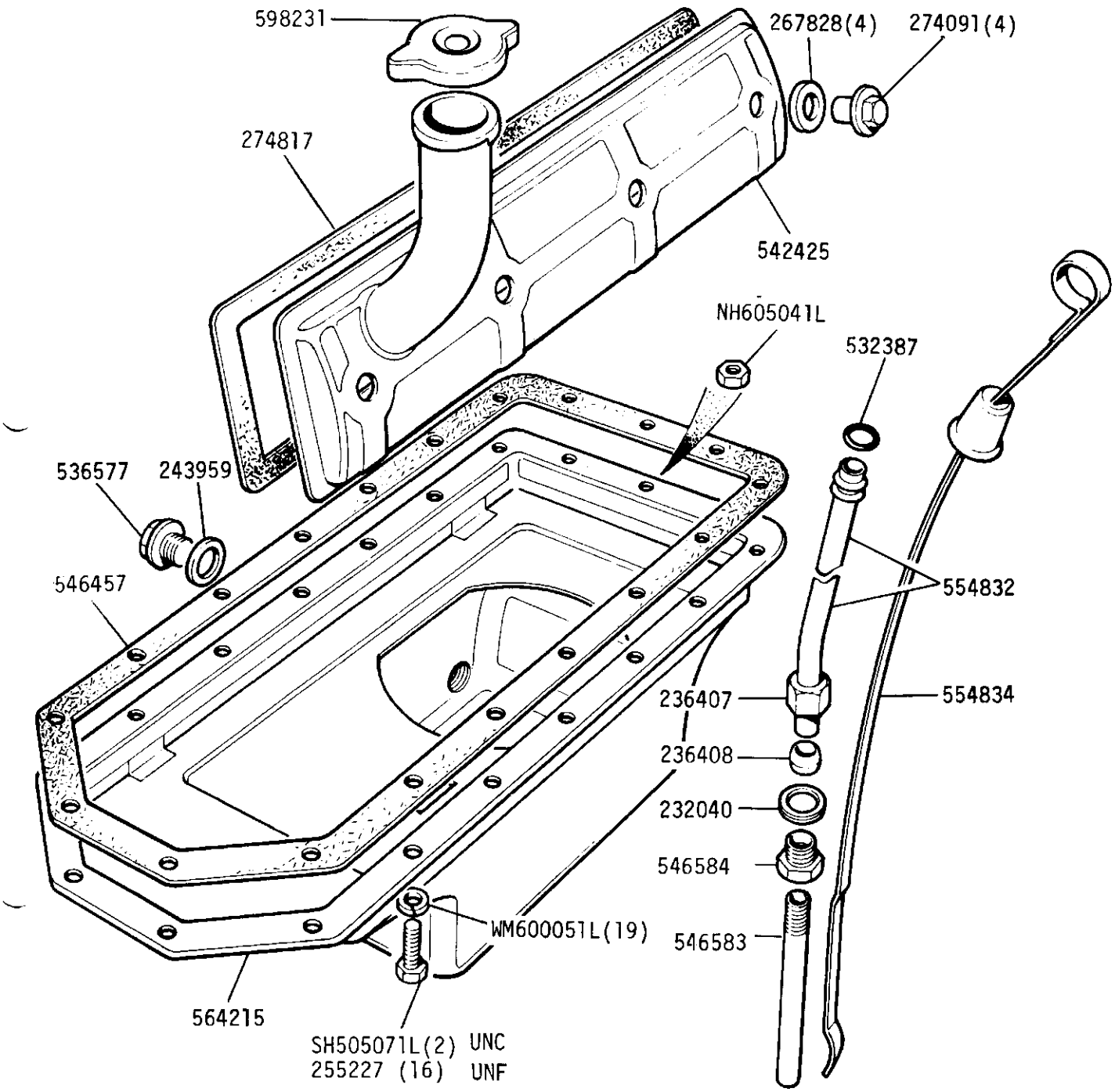

GROUP B

ENGINE - Front Cover and Engine Breather 2.6 Litre Petrol

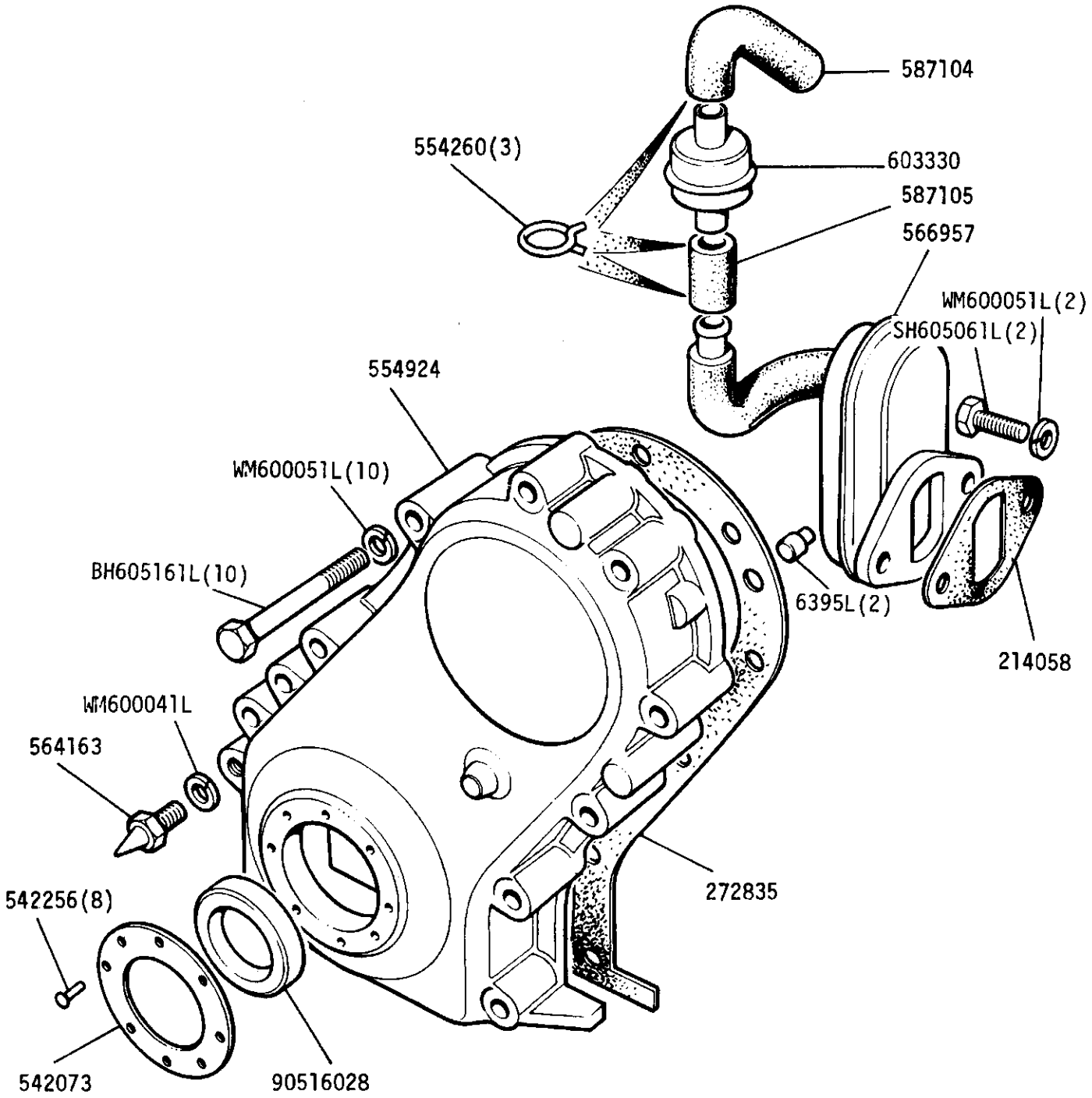

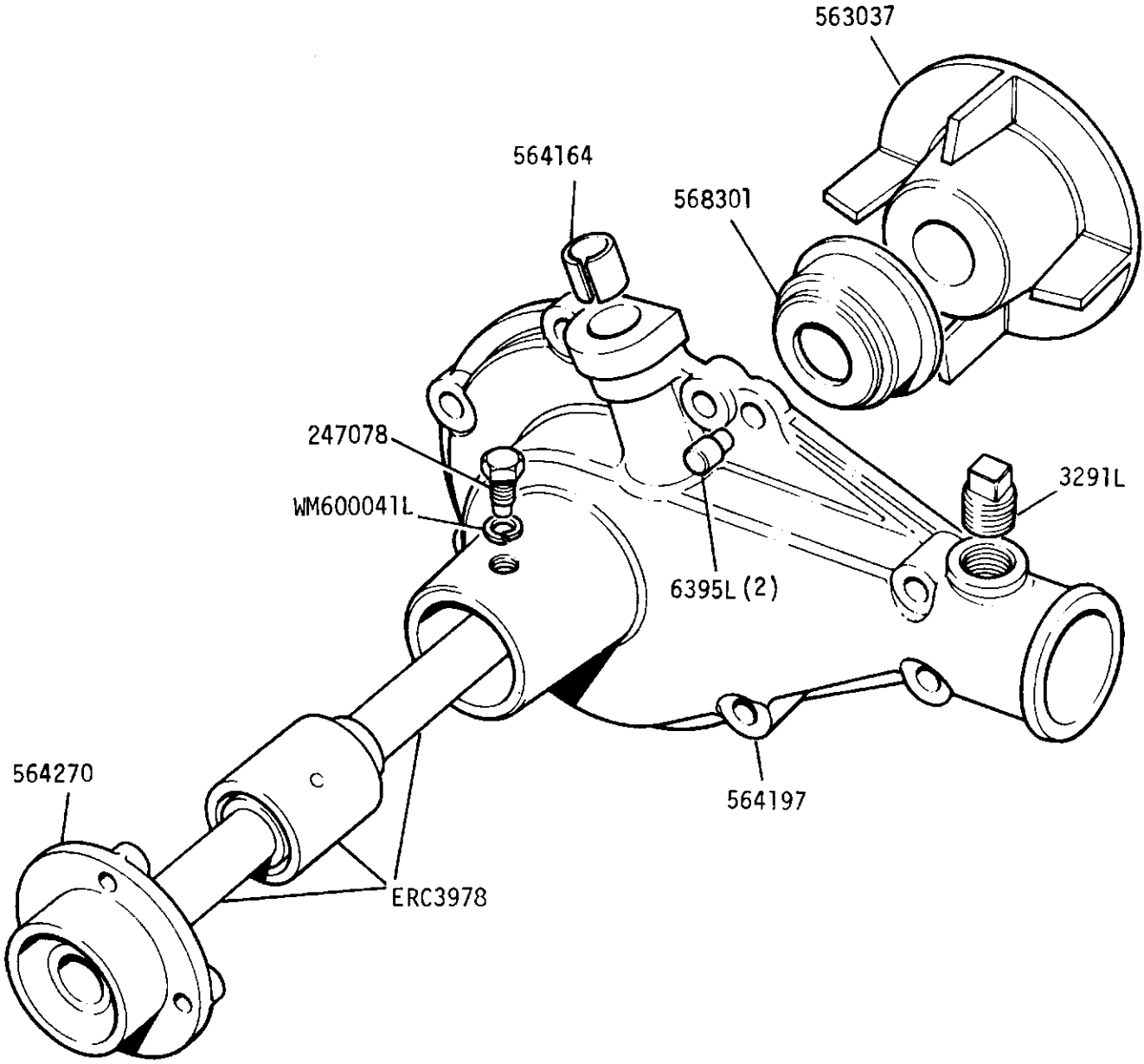

Water Pump overhaul kit 605716

GROUP B

ENGINE - Water Pump Adaptor and Fan 2.6 Litre Petrol

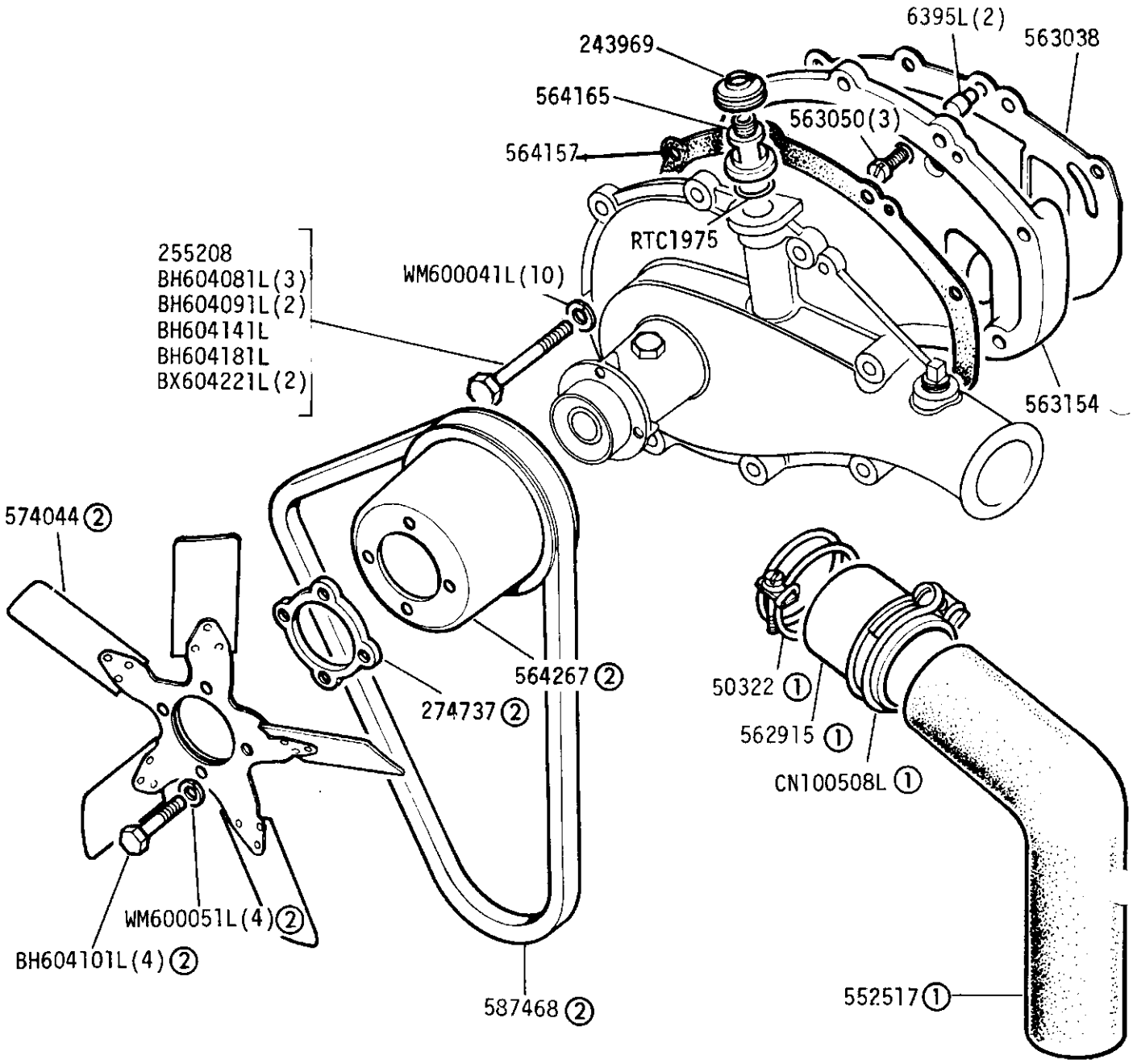

① Not required after August 1974 when one piece moulded bottom hose is fitted

② Up to Engine Suffix 'B' inclusive

From Engine Suffix 'C' ⇨ frame 1D 10 RH

ETOXED ENGINE - Water Pump and Viscous Fan 2.6 Litre Petrol From Engine Suffix 'C' onwards

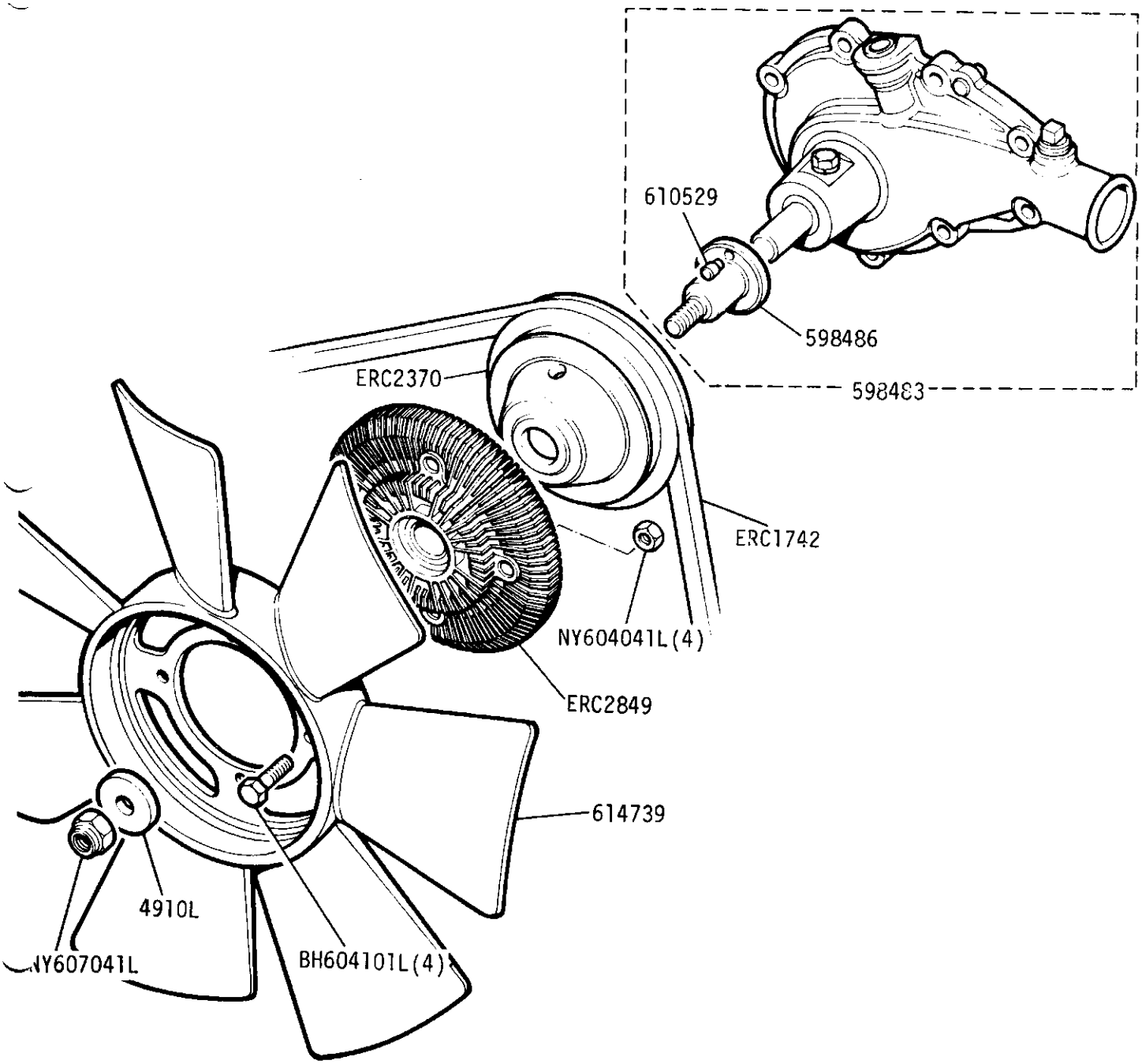

GROUP B
ENGINE - Thermostat and Oil Pipe 2.6 Litre Petrol

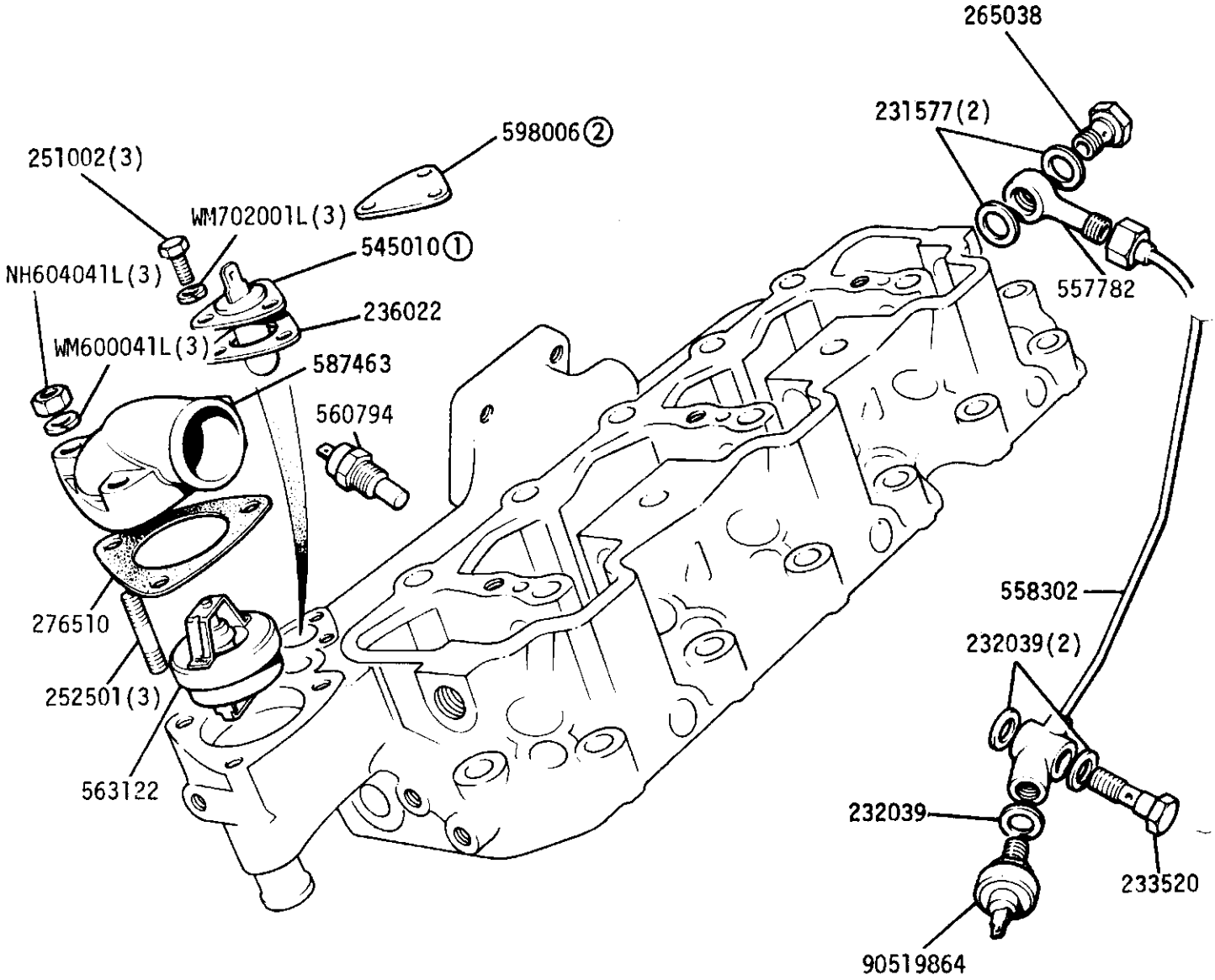

① Up to October 1972
② From November 1972 onwards

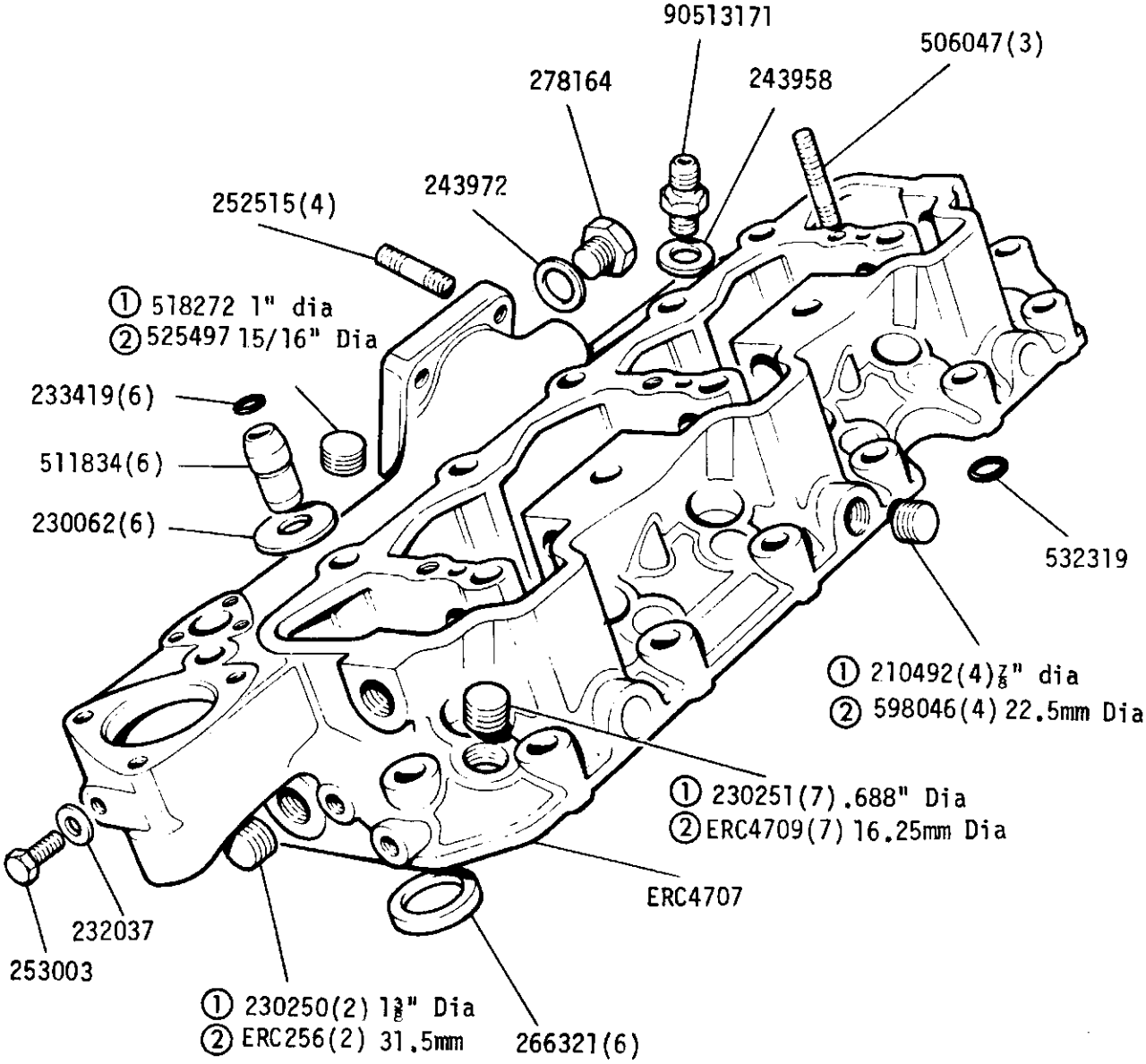

① CORE PLUGS
② CUP PLUGS

CHECK BEFORE ORDERING

GROUP B

ENGINE - Cylinder Head Fixings 2.6 Litre Petrol

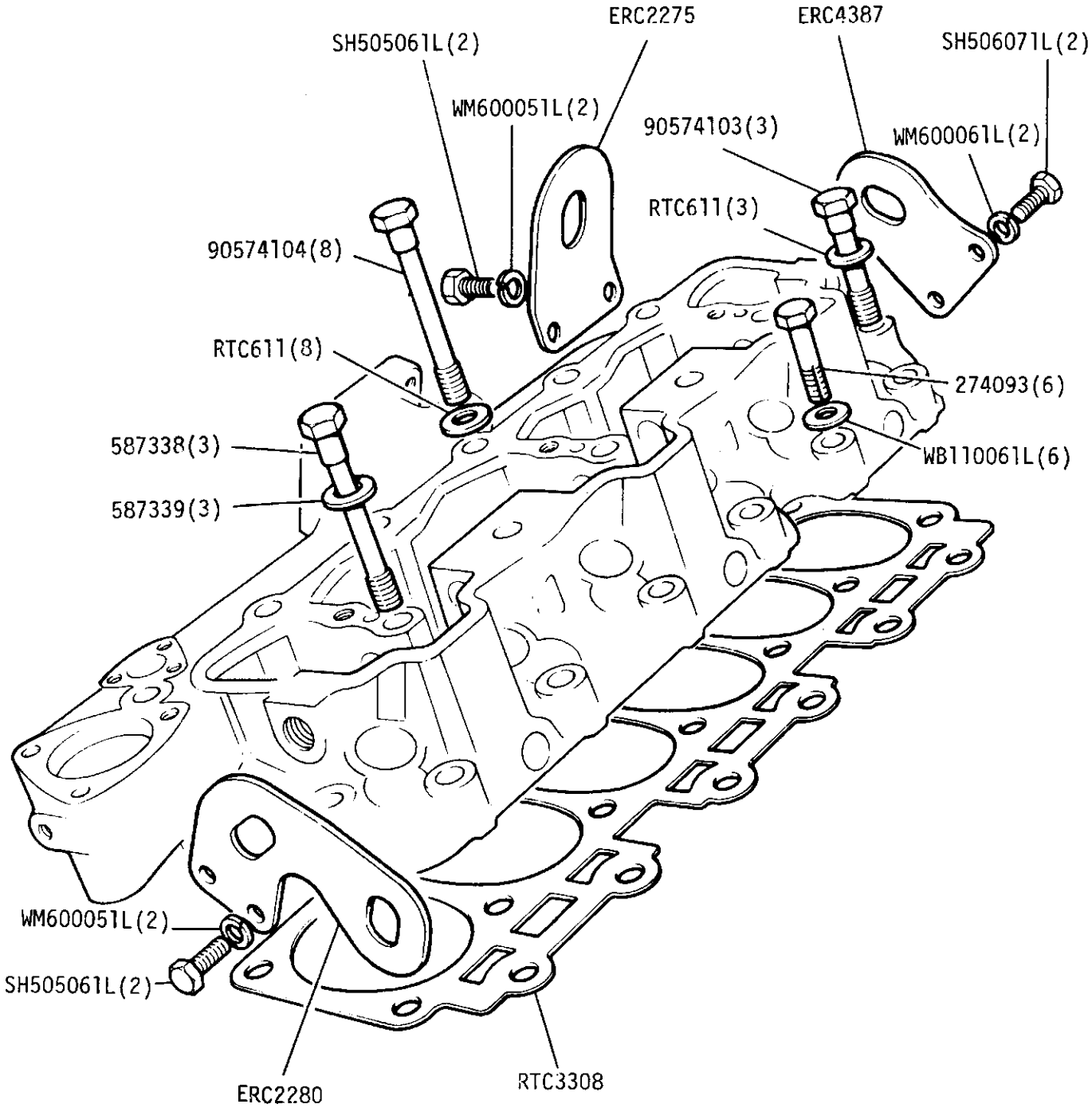

GROUP B

GINE - Rocker Cover 2.6 Litre Petrol

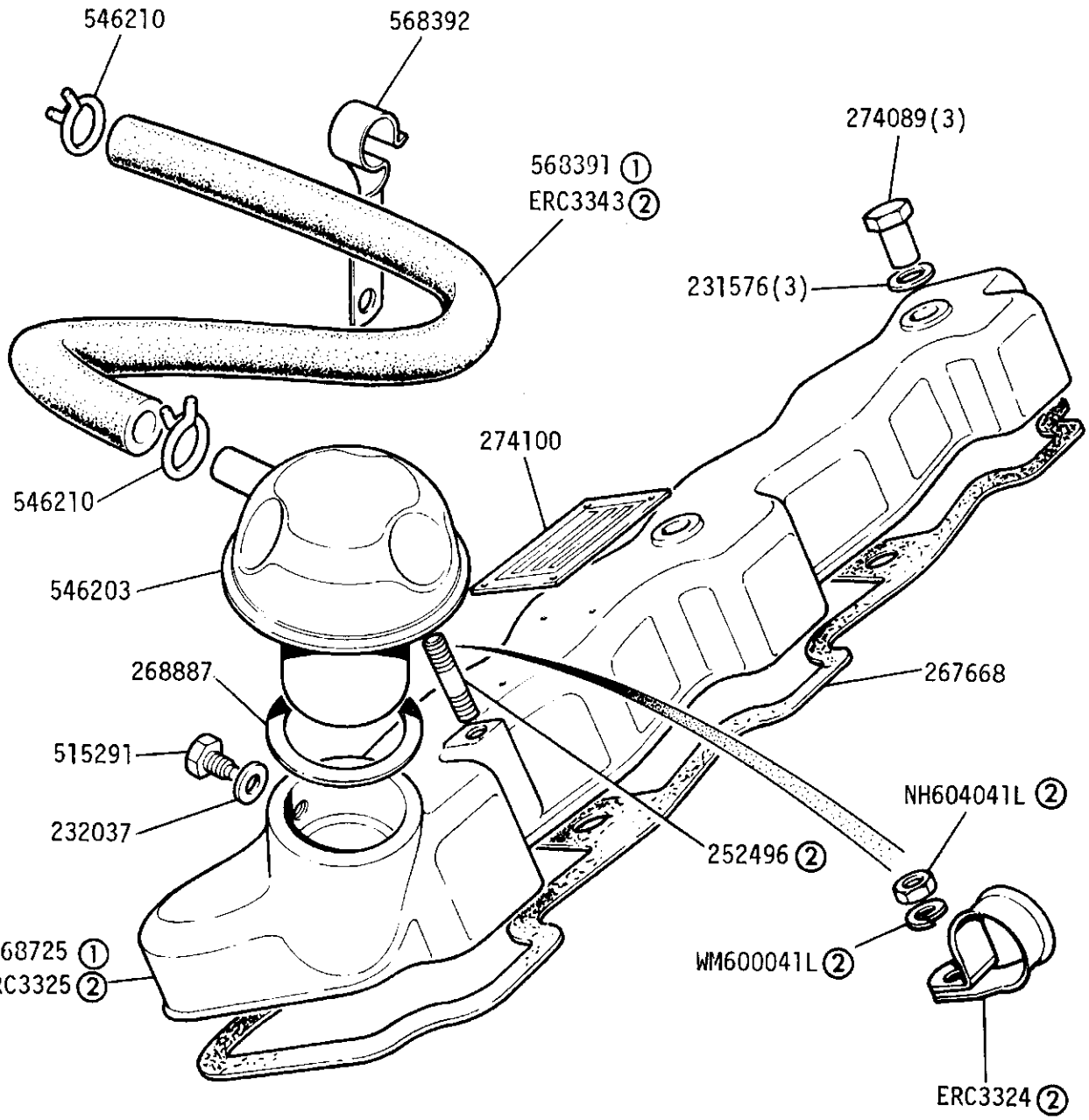

① Up to Engine suffix 'B' inclusive
② From Engine suffix 'C' onwards

GROUP B
ENGINE - Oil Filter and Adaptor 2.6 Litre Petrol

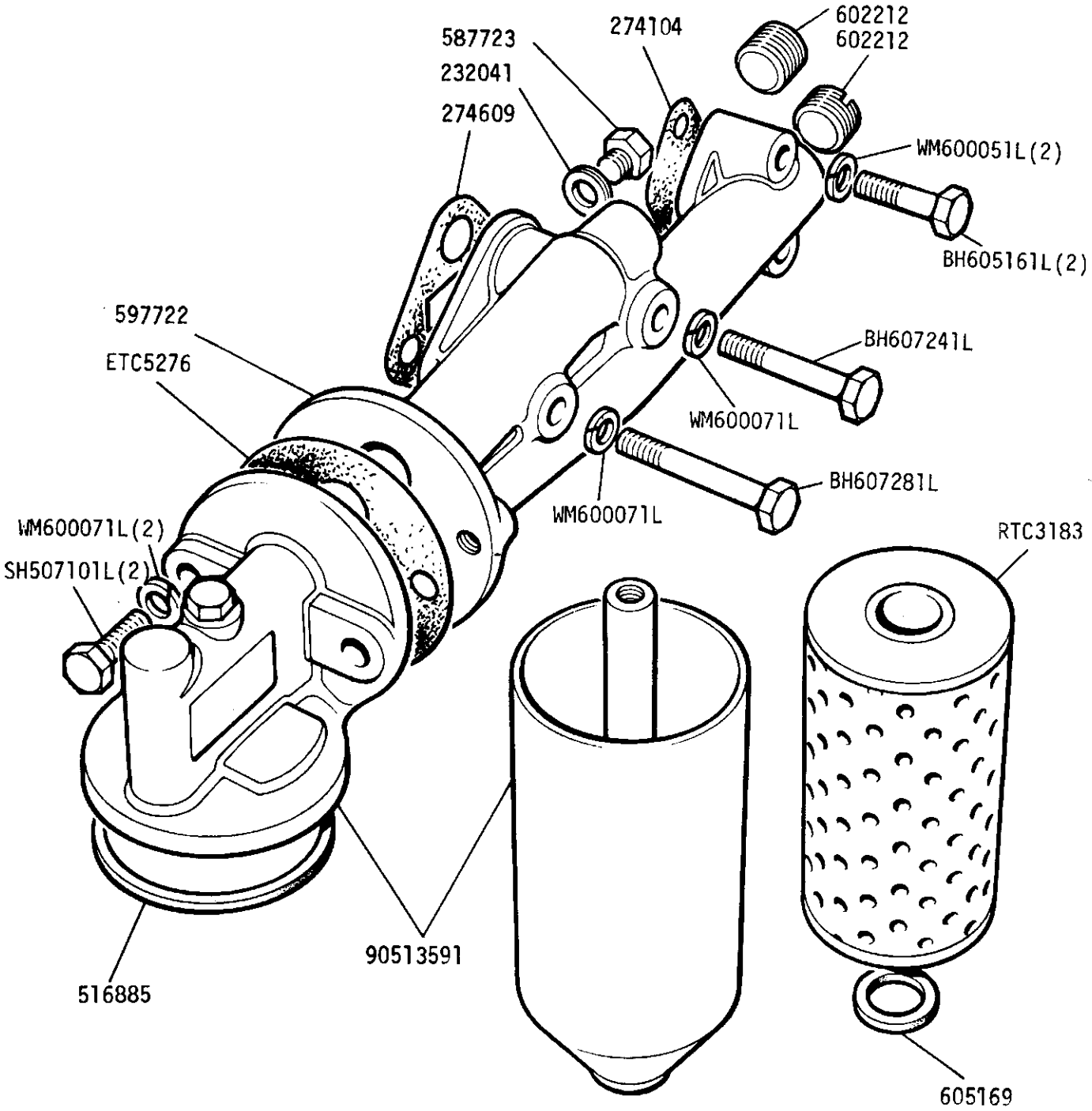

GROUP B

ENGINE - Exhaust Manifold 2.6 Litre Petrol

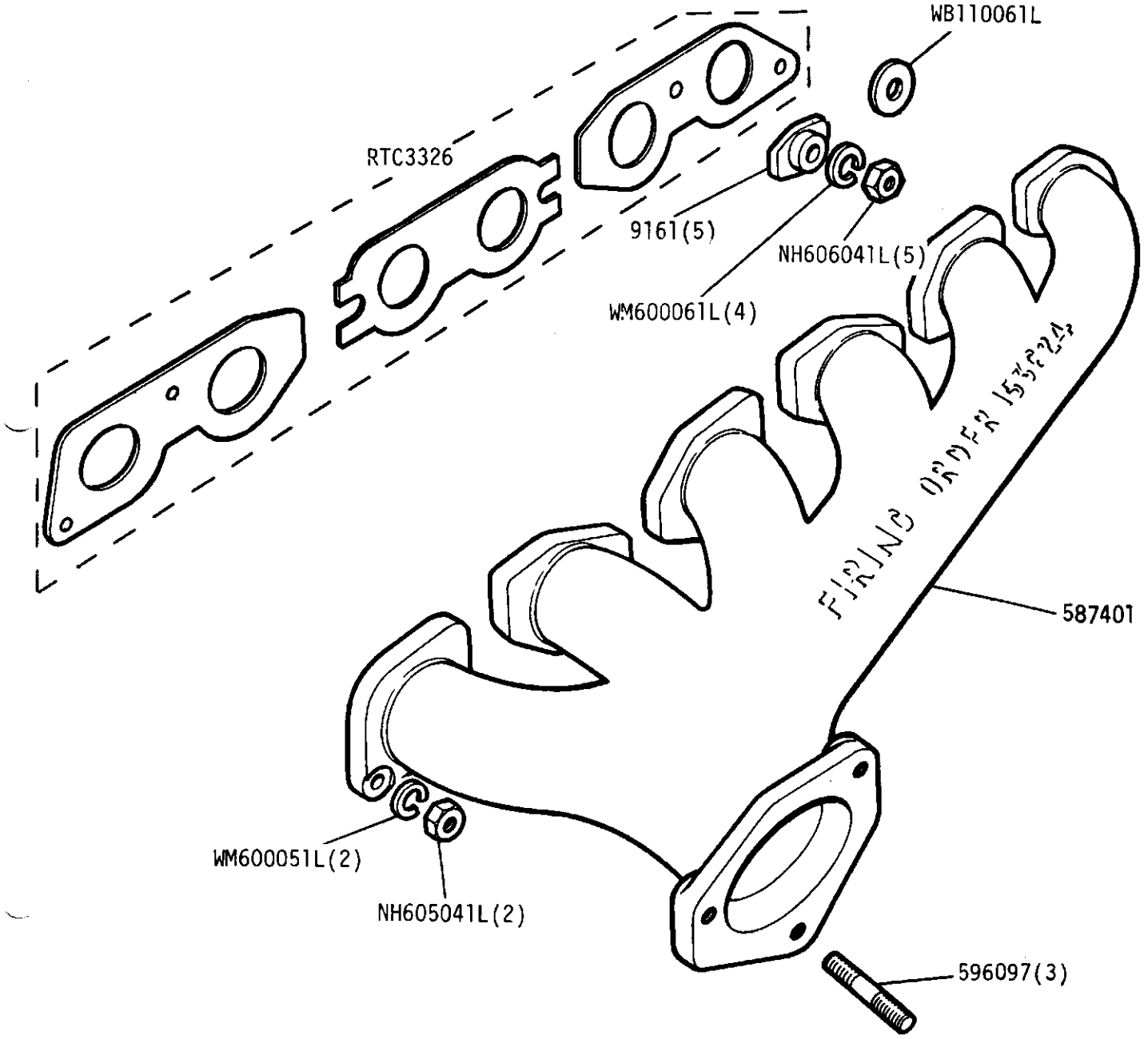

GROUP B

DETOXED ENGINE - Exhaust Manifold Adaptor 2.6 Litre Petrol From Engine Suffix 'C' onwards

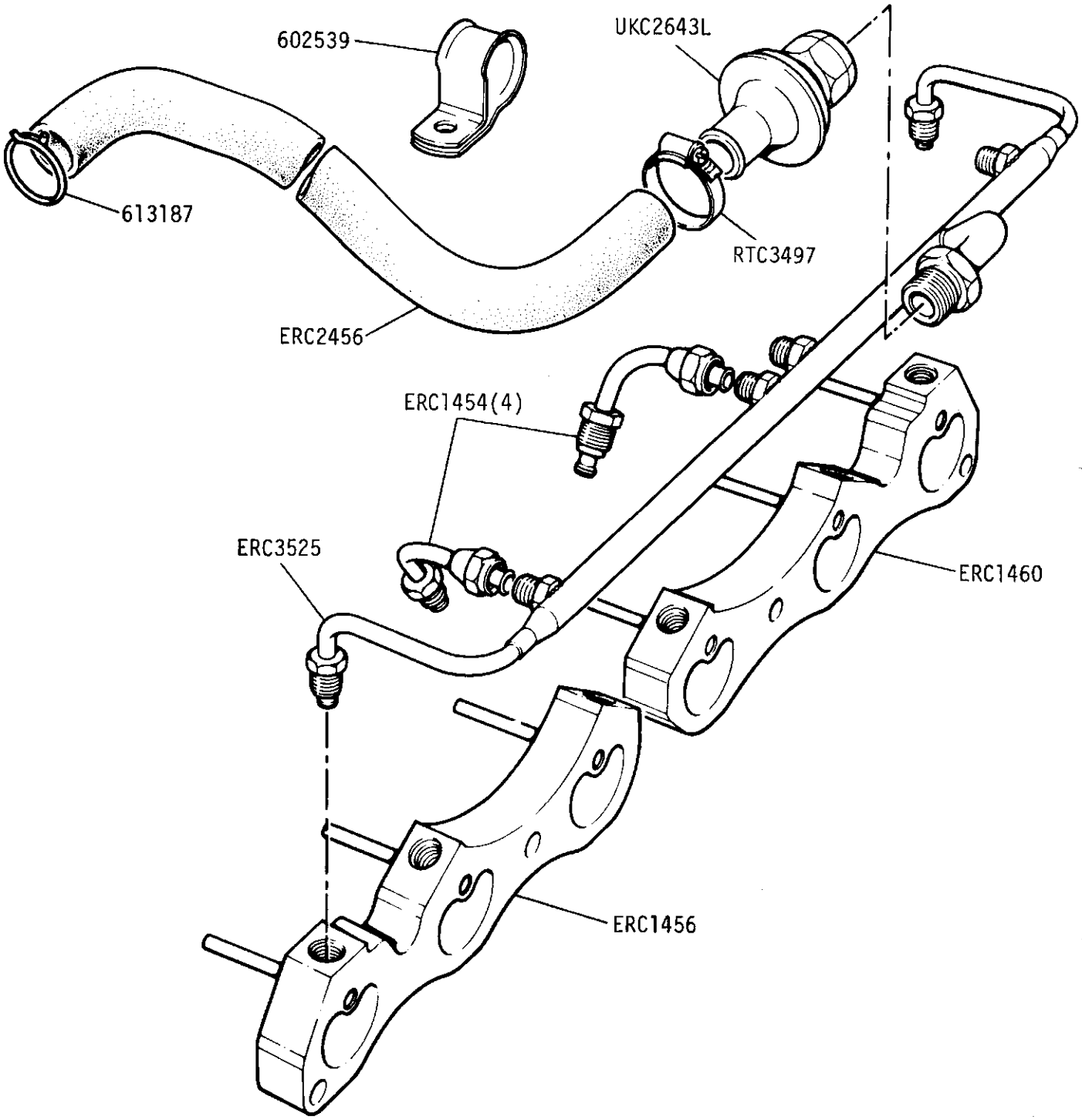

GROUP B

ETOXED ENGINE - Air Injection Pump 2.6 Litre Petrol From Engine Suffix 'C' onwards

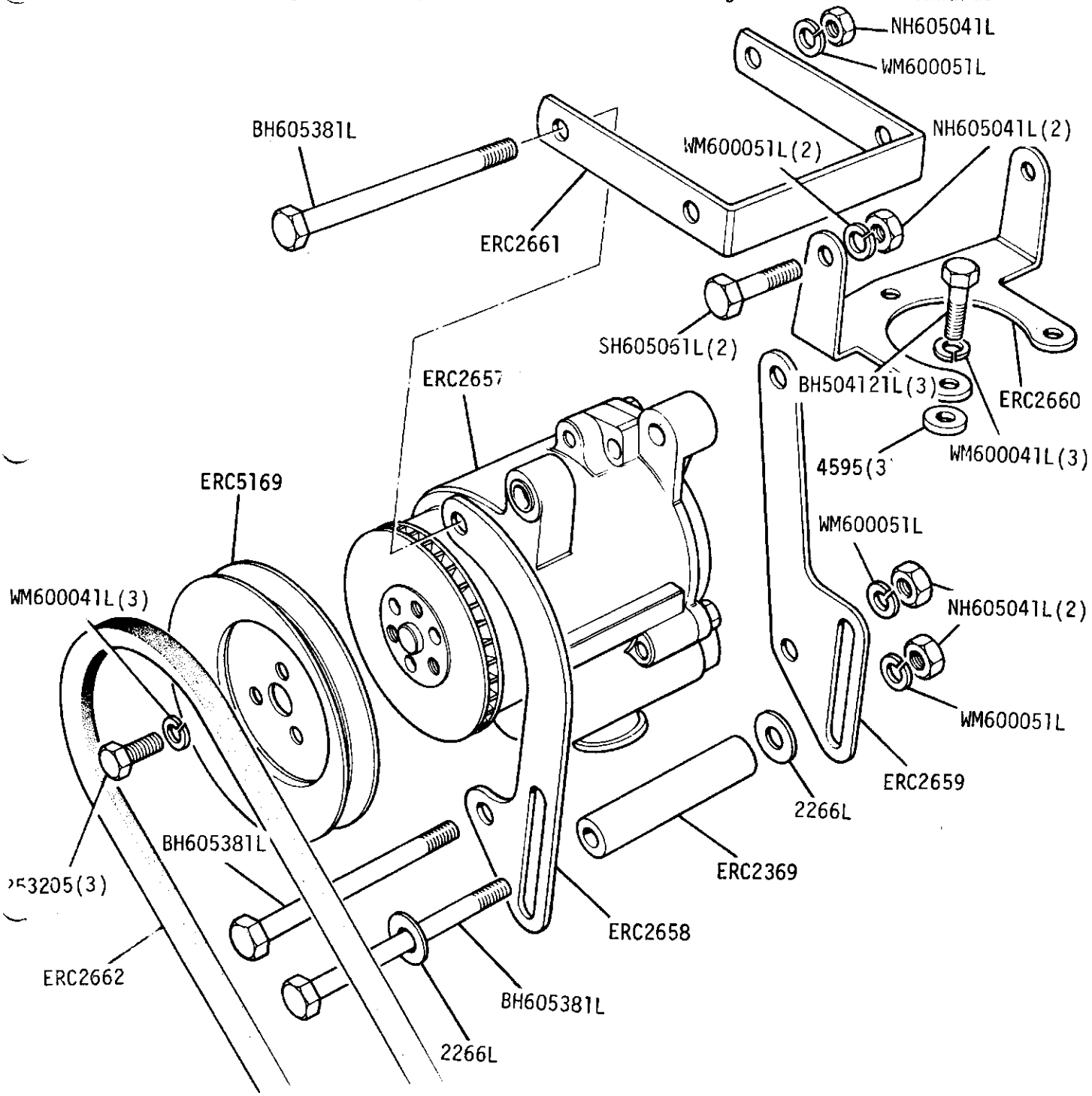

GROUP B

ENGINE - Tie Rod 2.6 Litre Petrol

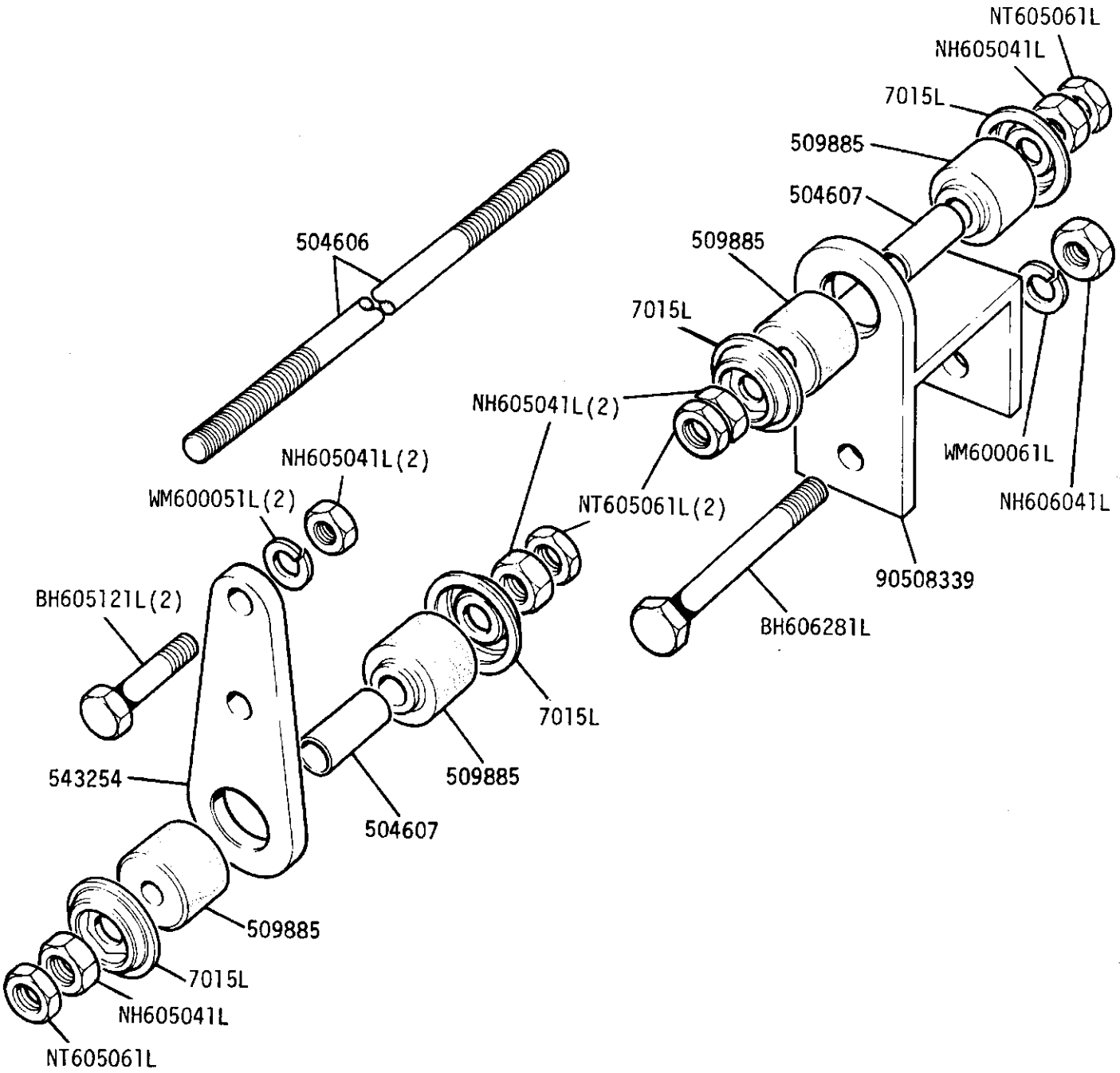

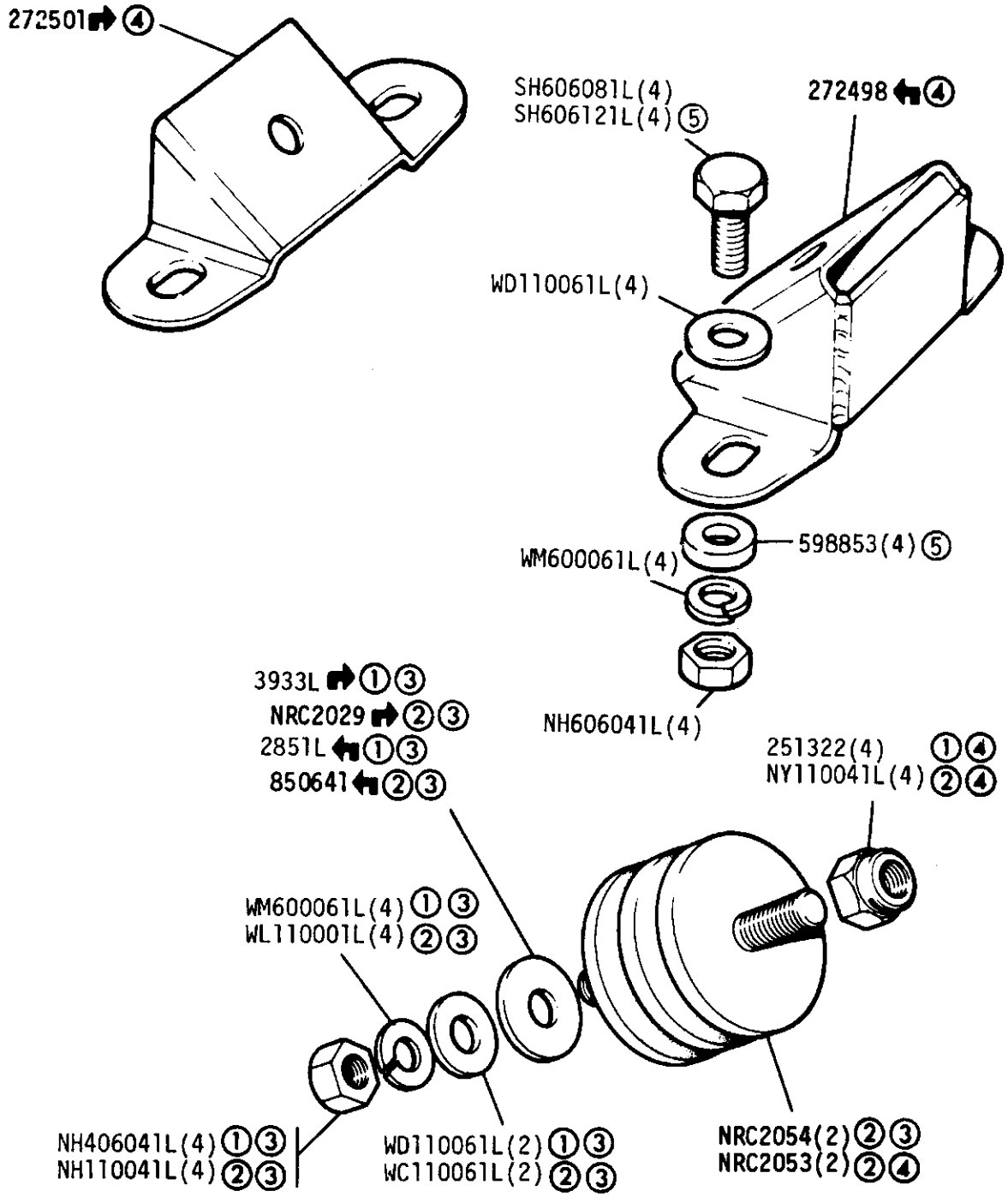

① BSF Fixings
② Metric Fixings
③ Front Mounting
④ Rear Mounting
⑤ 1 Ton

GROUP B
ENGINE ASSEMBLY - 2¼ Litre Diesel

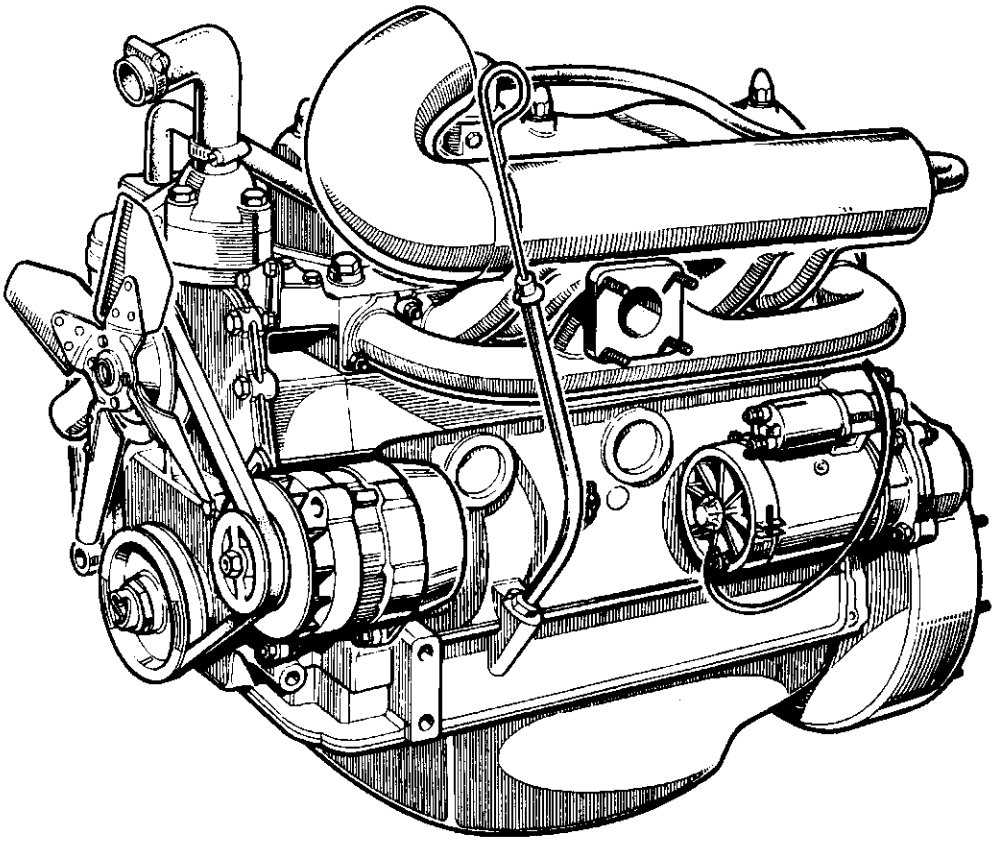

To fit new metric stripped engine in place of imperial stripped engine use conversion kit RTC3013

Complete engine assembly with flywheel and clutch ERC5263N
Stripped engine assembly - New RTC3773N ②
Stripped engine assembly - Rebuilt RTC2353R ① RTC2976R ③ RTC3773R ④
Short engine RTC2920 ③
① 3 bearing crankshaft
② 5 bearing crankshaft
③ Engine prefix 366 suffix B only
④ Engine prefix 366 suffix C onwards

ENGINE - Cylinder Block 2¼ Litre Diesel

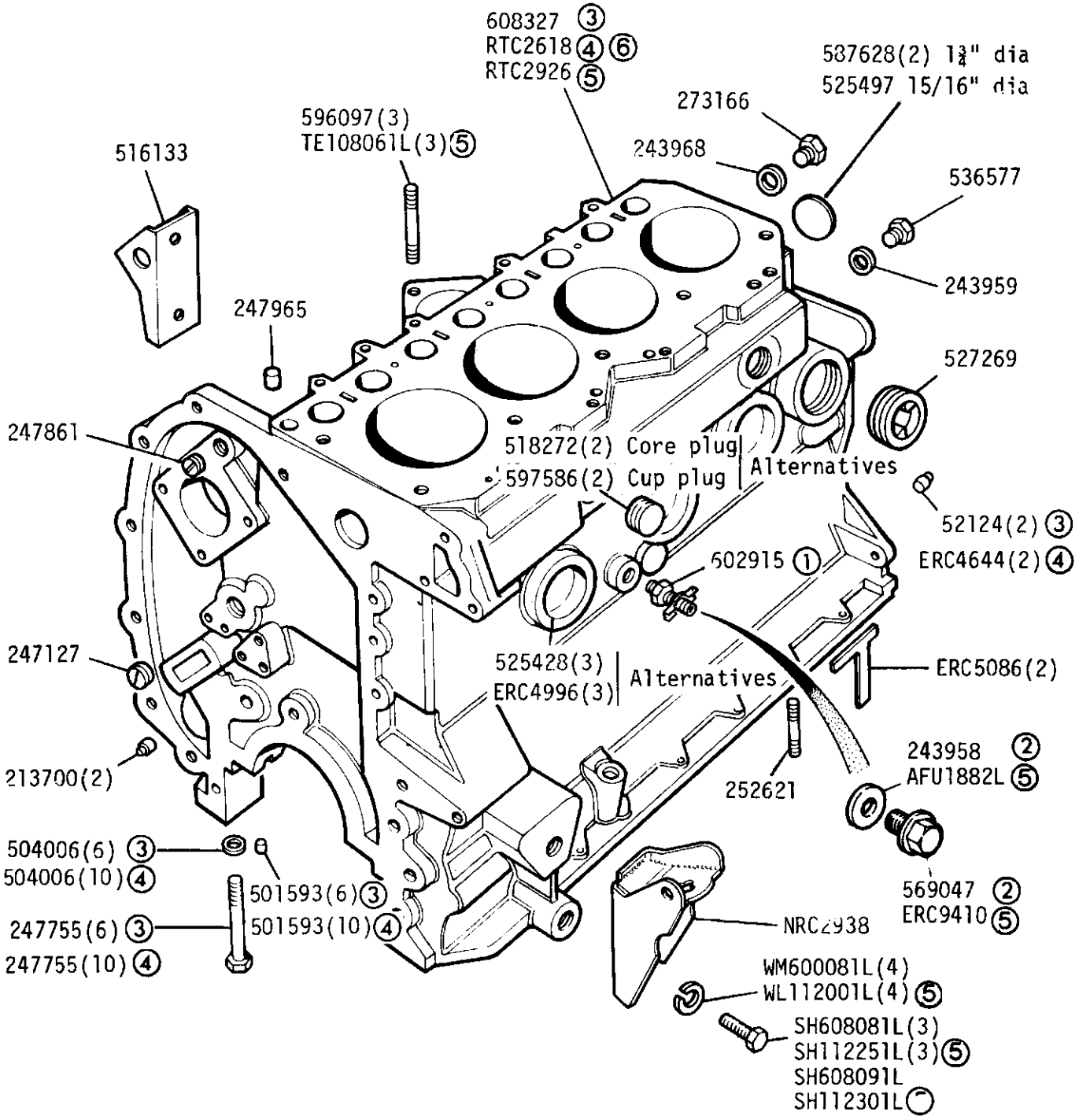

Stud Kit for cylinder block 600245 Cylinder liner ERC9188(4) Decarbonising gasket set RTC3336 Engine overhaul gasket set 525520 use in conjunction with decarbonising gasket set	① Drain tap Alternative fixings ② Drain plug Check before ordering ③ 3 Bearing Crankshaft ④ 5 Bearing Crankshaft ⑤ From engine No.36619420B

⑥ NLS for Replacement use Block RTC2926 and Conversion Kit RTC3013

GROUP B
ENGINE - Crankshaft 2¼ Litre Diesel

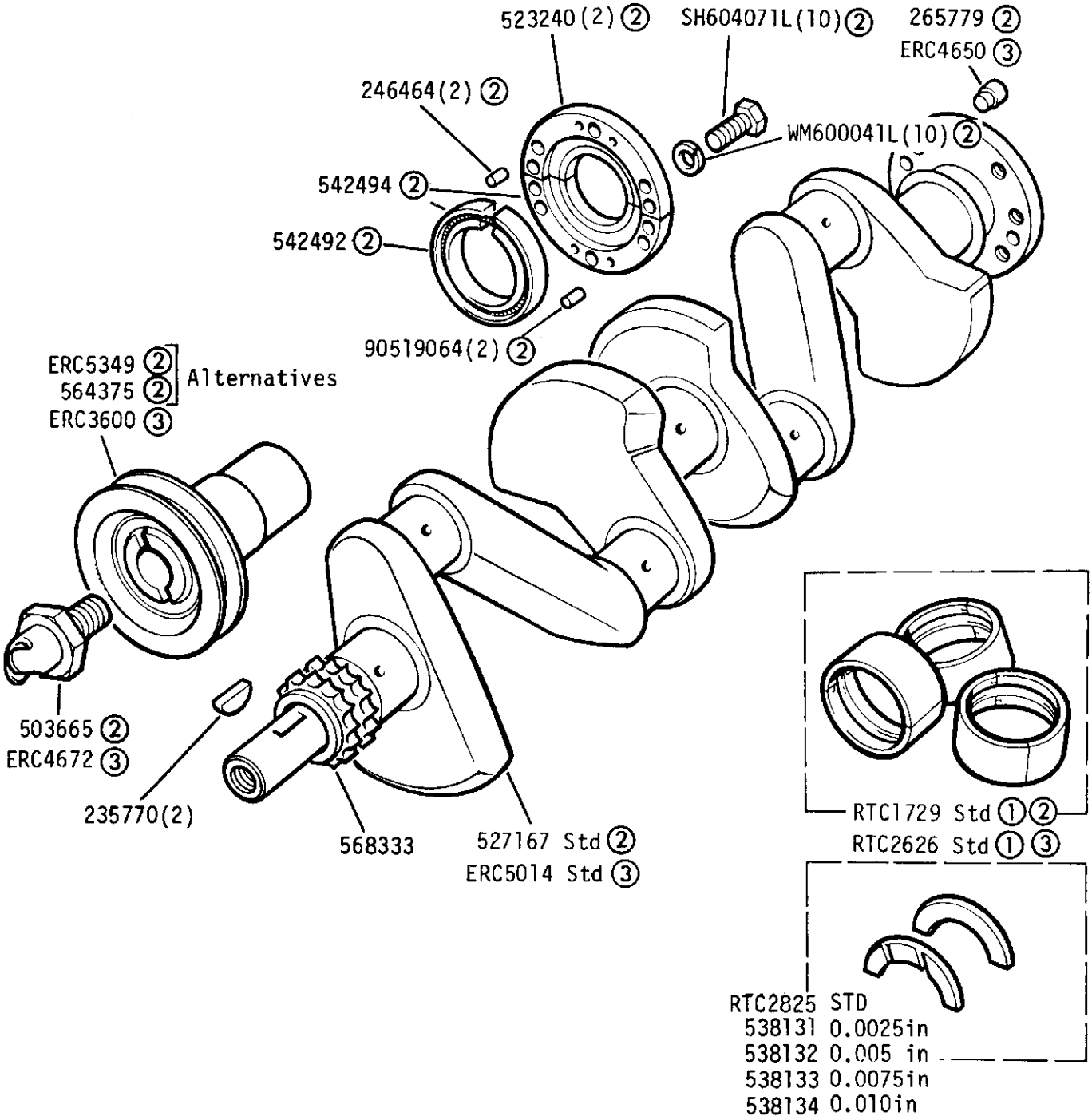

Oil seal assembly 542494 also includes loz tube of silicone grease 270656 ②

① Engine Set

② 3 Bearing Crankshaft

③ 5 Bearing Crankshaft

Oil seal, rear main bearing ETC5369 ③

ENGINE - Connecting Rod and Piston 2¼ Litre Diesel

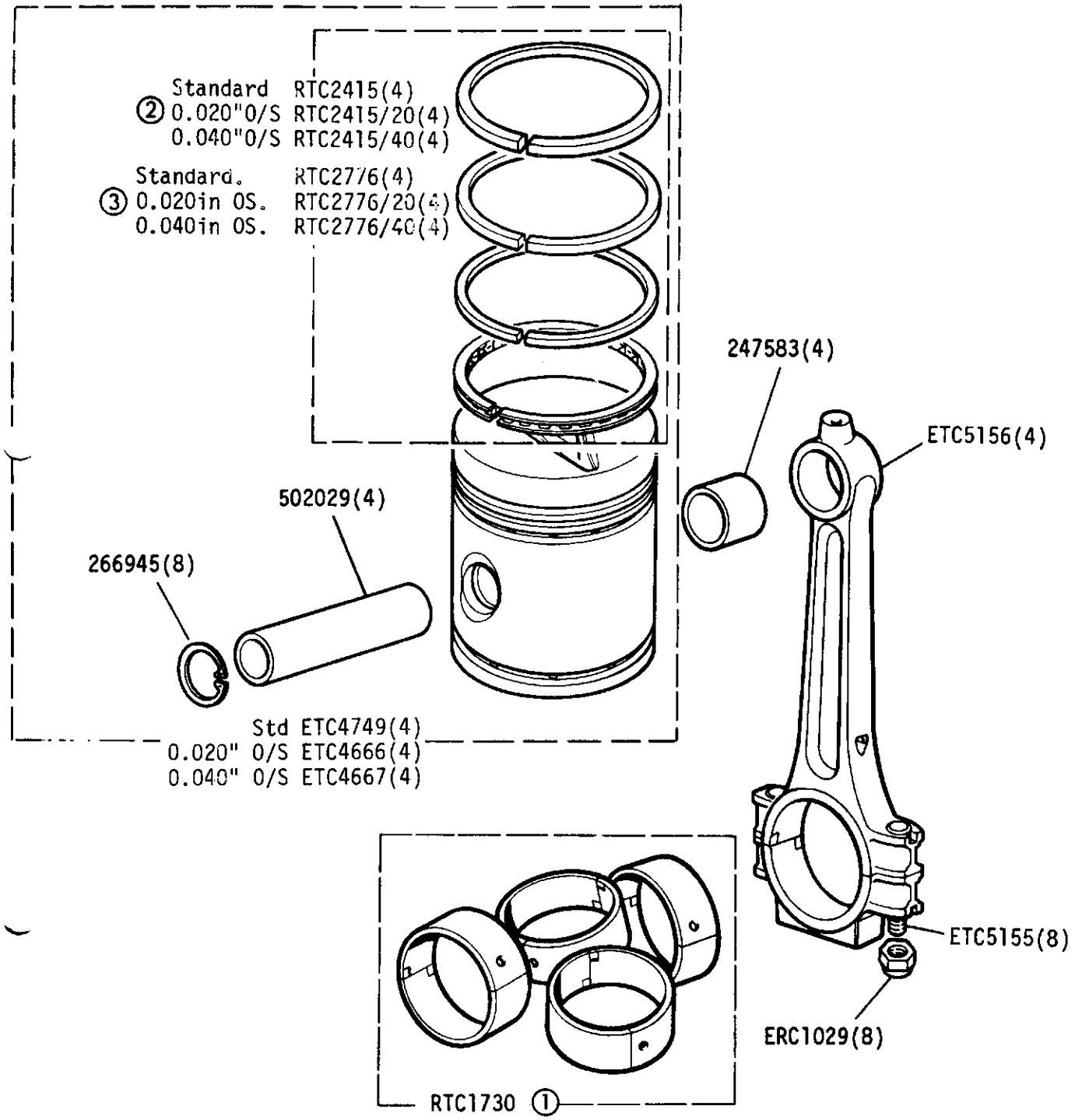

① Engine Set
② Piston Ring Set - all engines prefix 906 and upto engine No 36615199A
③ Piston Ring Set from engine No 36615200A

GROUP B
ENGINE - Oil Pump 2¼ Litre Diesel

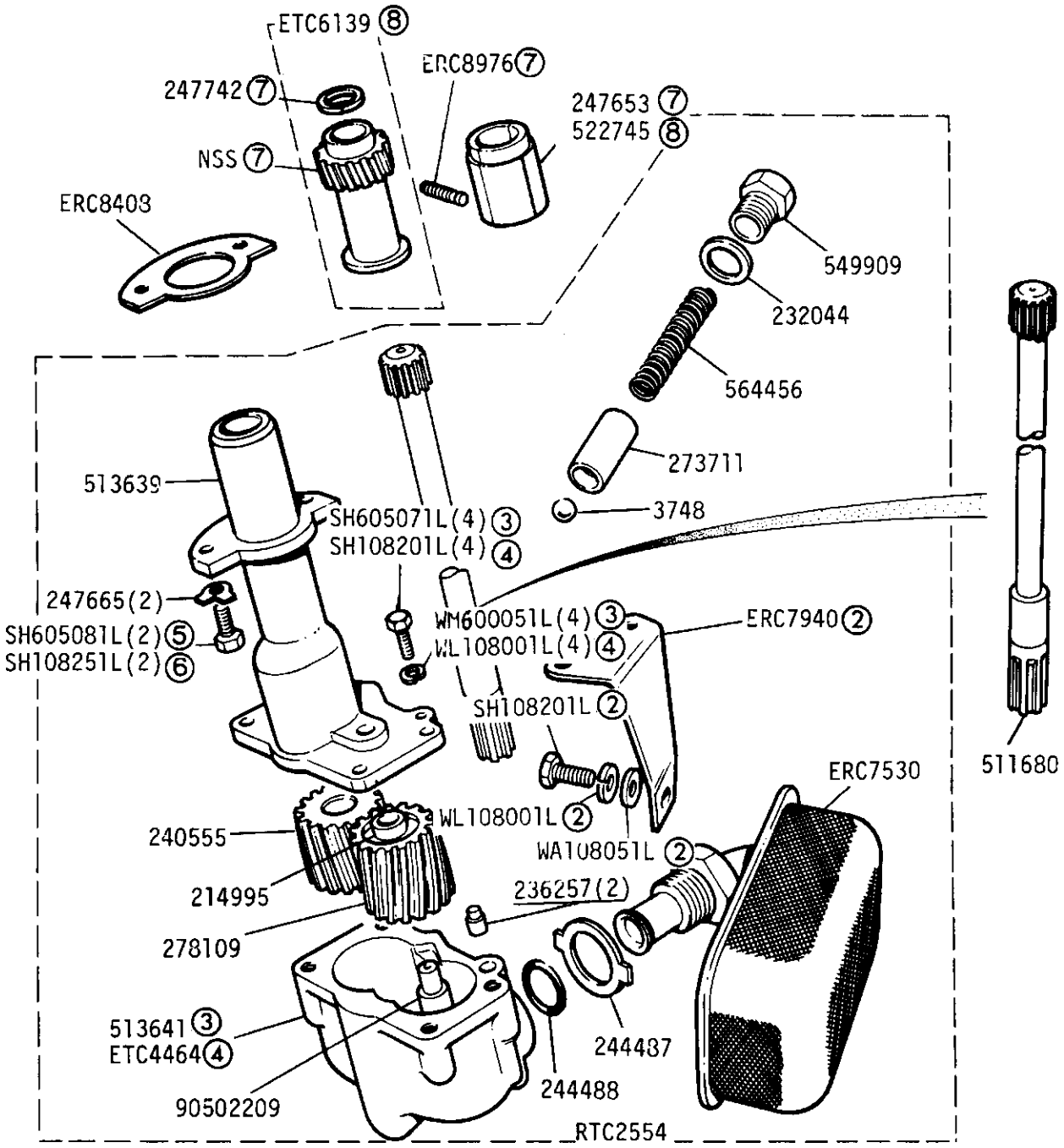

① Up to engine number 36624506B ② From engine number 36624507B
③ Engine prefix 906 and engine prefix 366 suffix A and B
④ Engine prefix 366 suffix C onwards
⑤ Up to engine number 36619419B ⑥ From engine number 36619420B
⑦ Early type of drive shaft with split bush and flange. (illustrated)
⑧ Later type of drive shaft with locknut ETC6138 and thrust washer ETC6139. (not illustrated)

GROUP B
ENGINE - Timing Chain and Tensioner 2¼ Litre Diesel

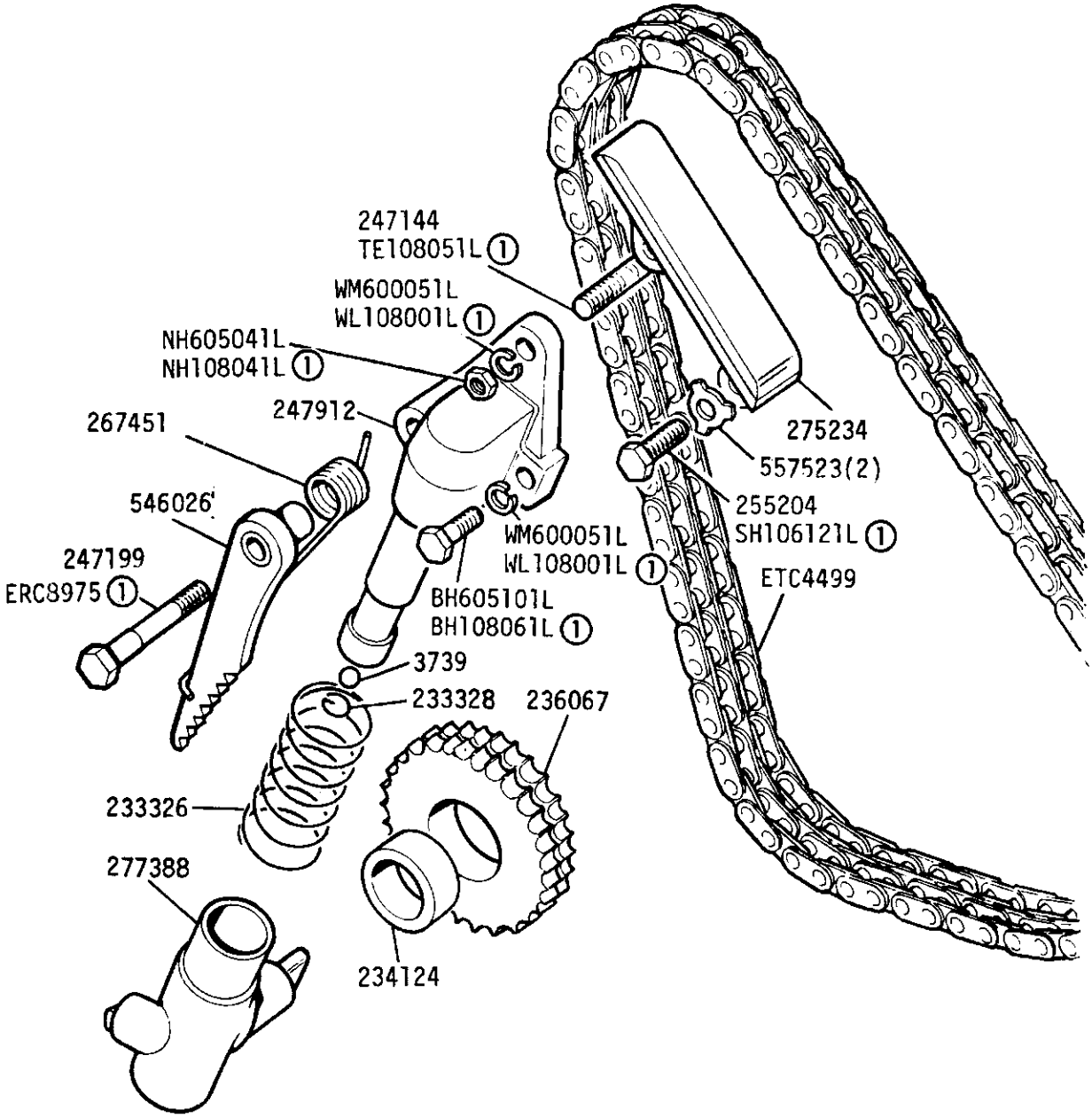

① From engine No. 36619420B

GROUP B
ENGINE - Camshaft 2¼ Litre Diesel

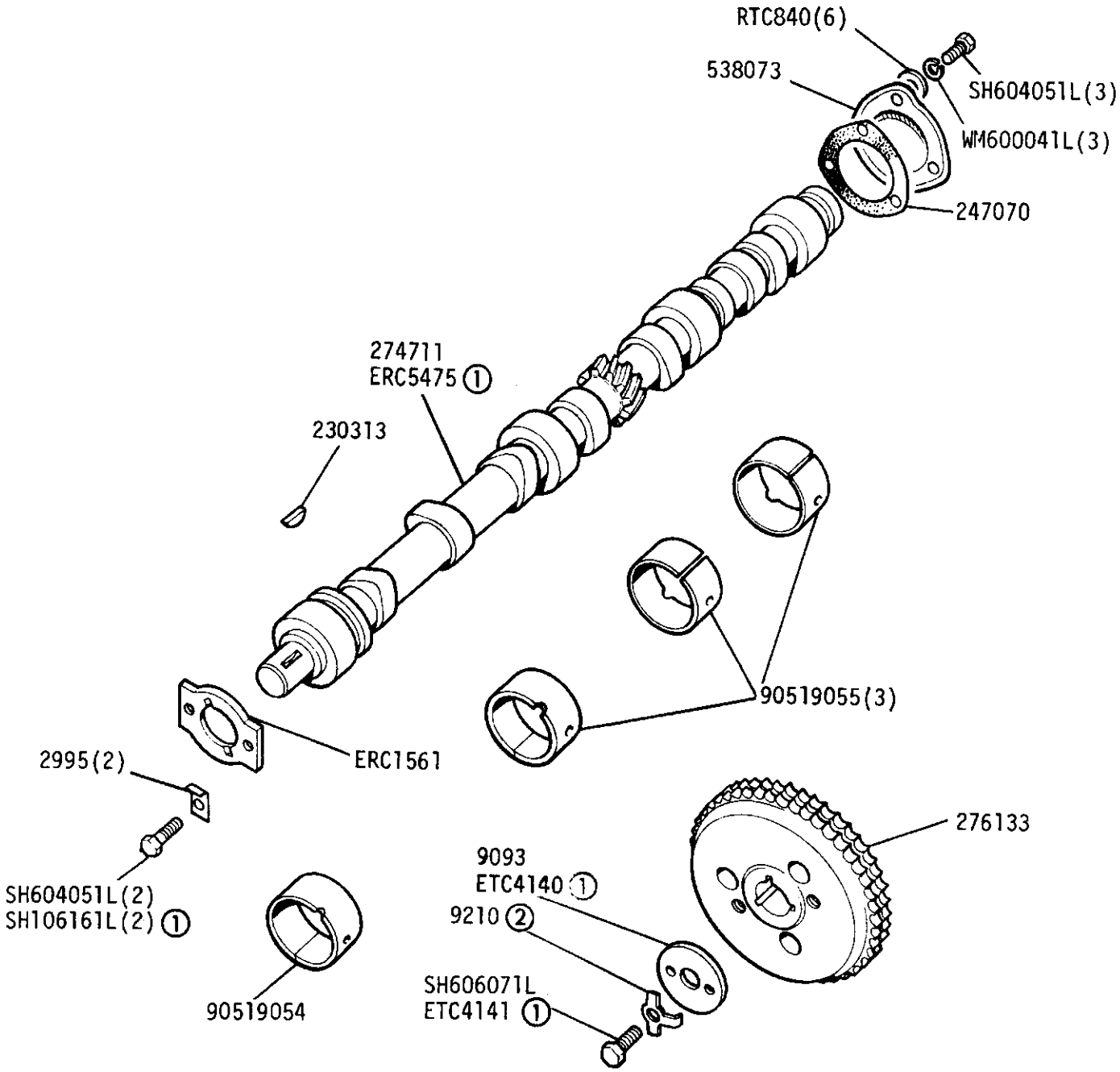

① From engine No. 36619420B

Kit for fitting metric camshaft in imperial cylinder block RTC2958

② Not required from ①

ENGINE - Valves and Tappets 2¼ Litre Diesel

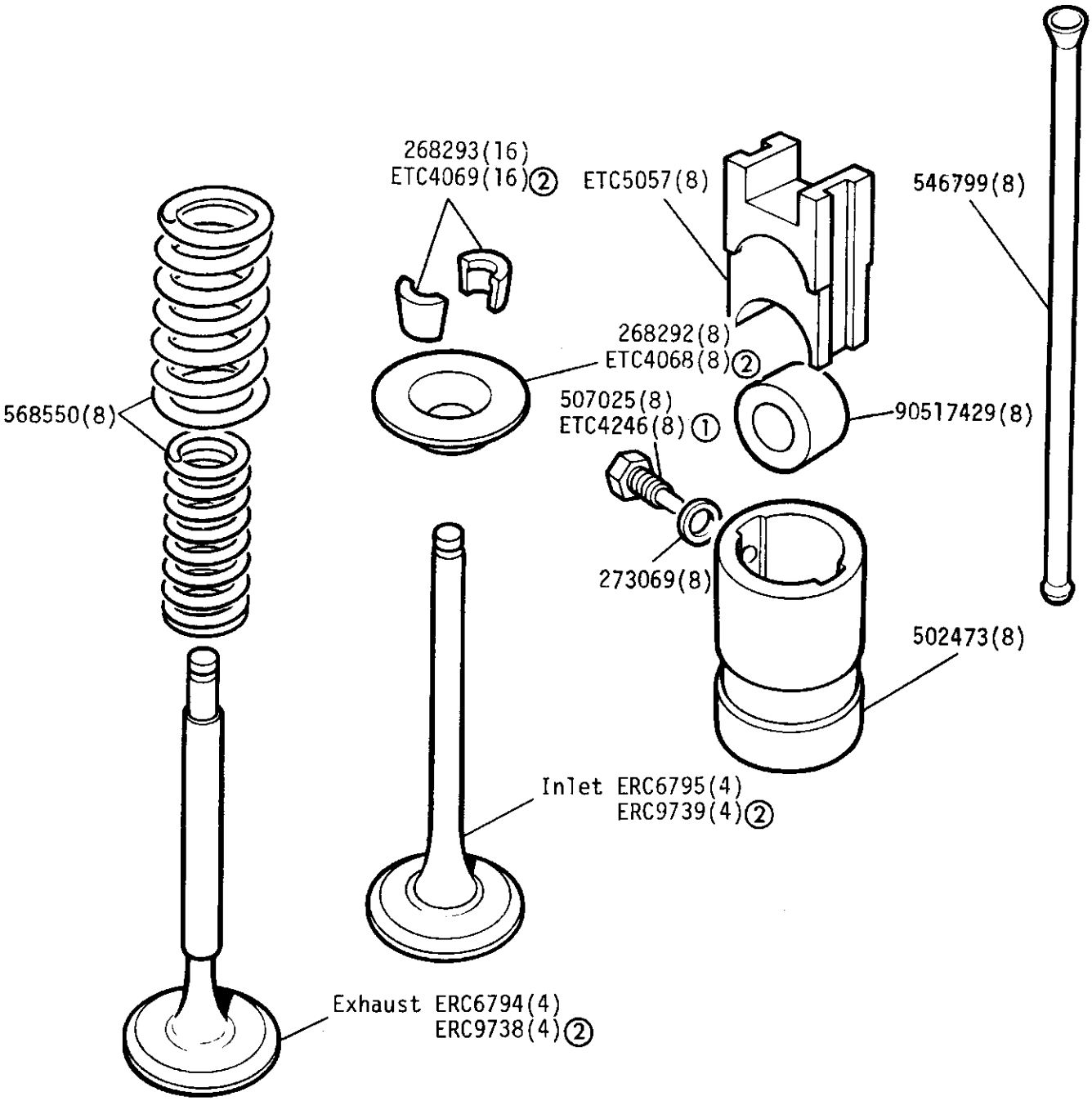

Tappet, tappet guide, roller and set bolt assembly, 507829(8)

① From engine No. 36619420B

② From engine No. 36627329C

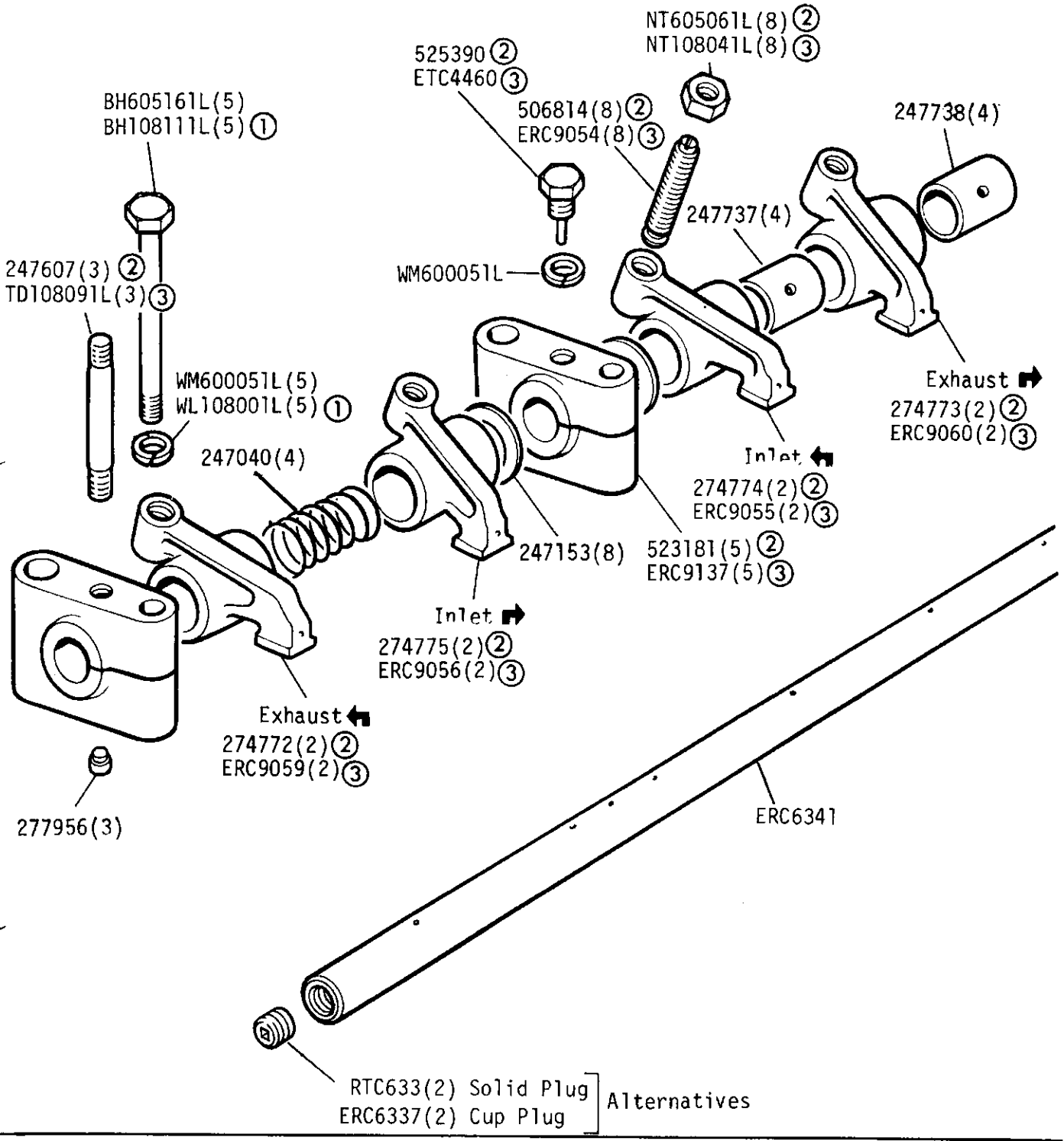

① From engine No. 36619420B
② Engine prefix 906 and prefix 366 suffix 'A' and 'B' only
③ Engine prefix 366 suffix 'C' onwards

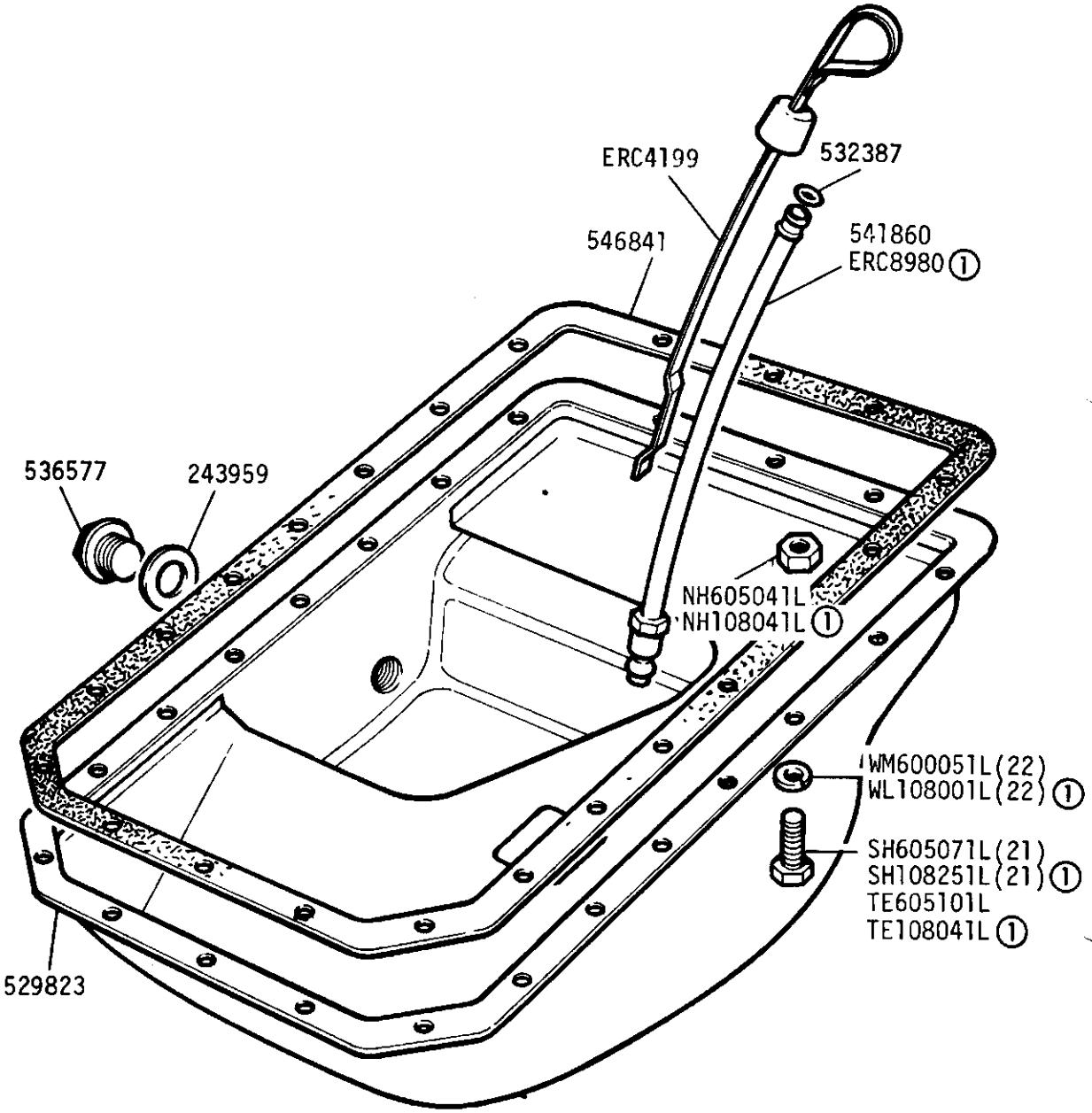

① From engine No.36619420B

OUP B

ENGINE - Crankcase Sump 2¼ Litre Diesel Optional

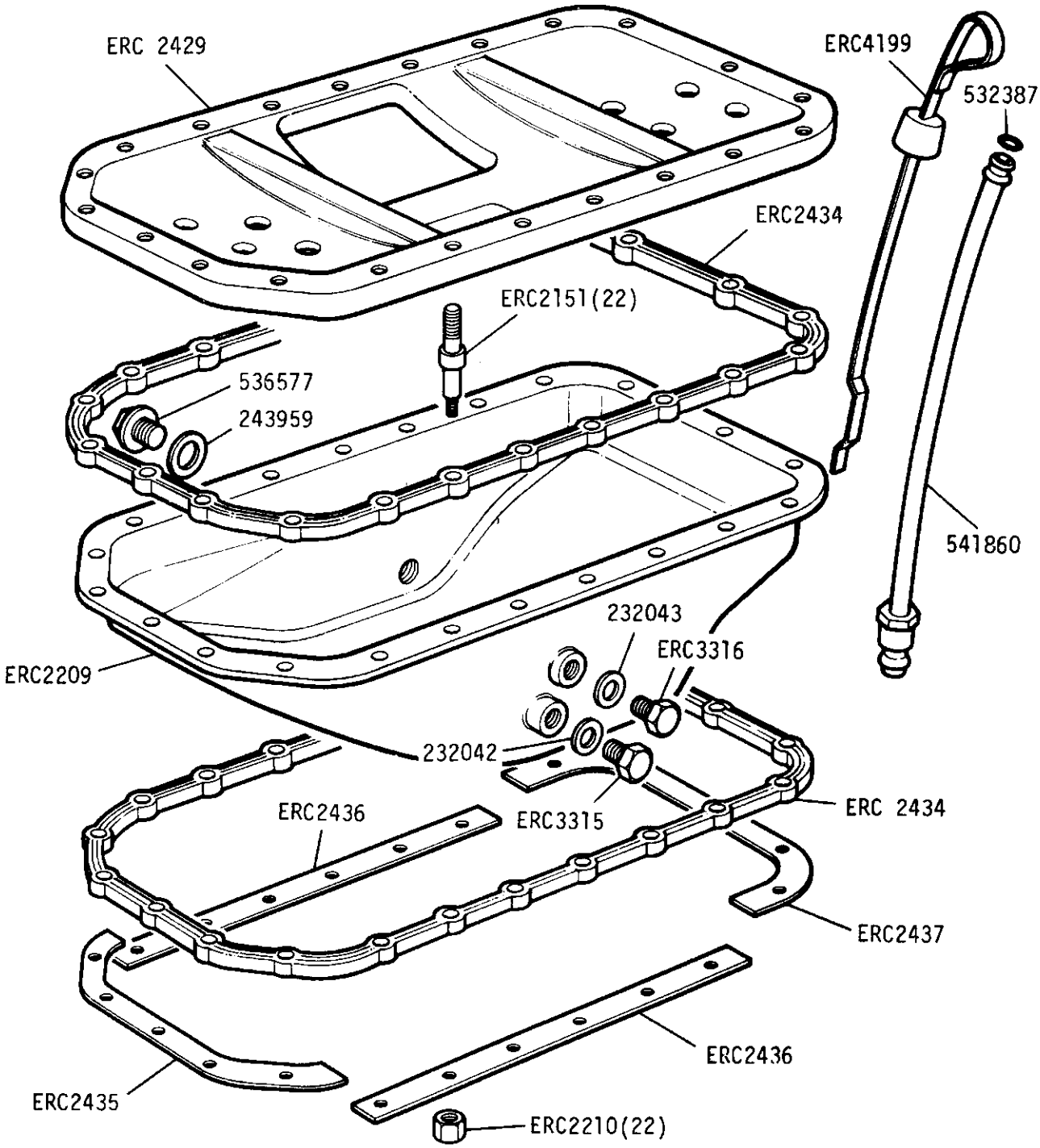

GROUP B
ENGINE - Crankcase Sump 2¼ Litre Diesel Optional

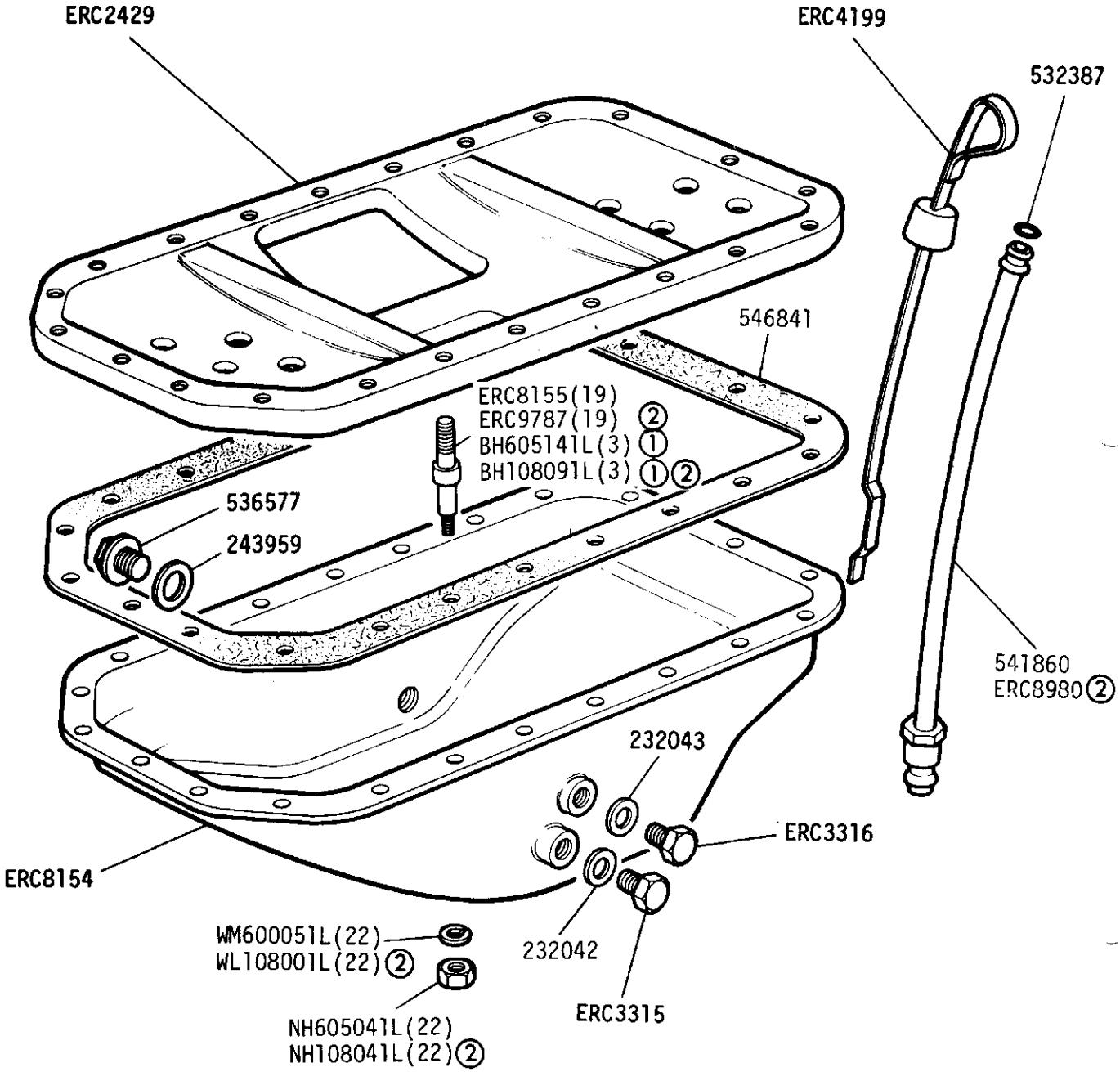

① Bolts fitted into three holes adjacent to flywheel housing

② From engine No. 36619420B

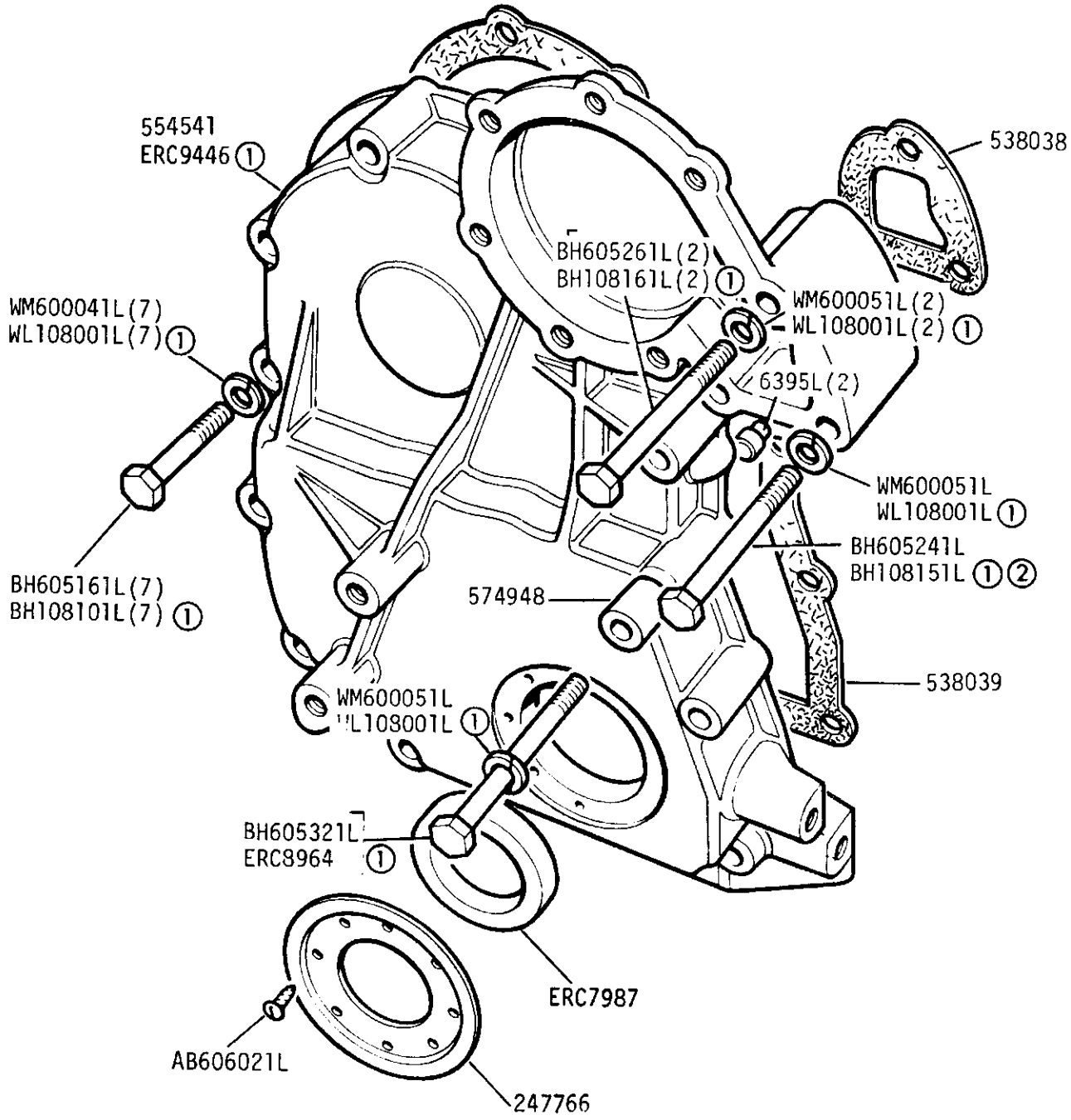

① From engine No. 36619420B
② Not illustrated BH108141L Bolt ①
WL108001L Spring Washer ①
BH108171L Bolt ①
4566 Washer ①

GROUP B
ENGINE - Side Cover 2¼ litre Diesel

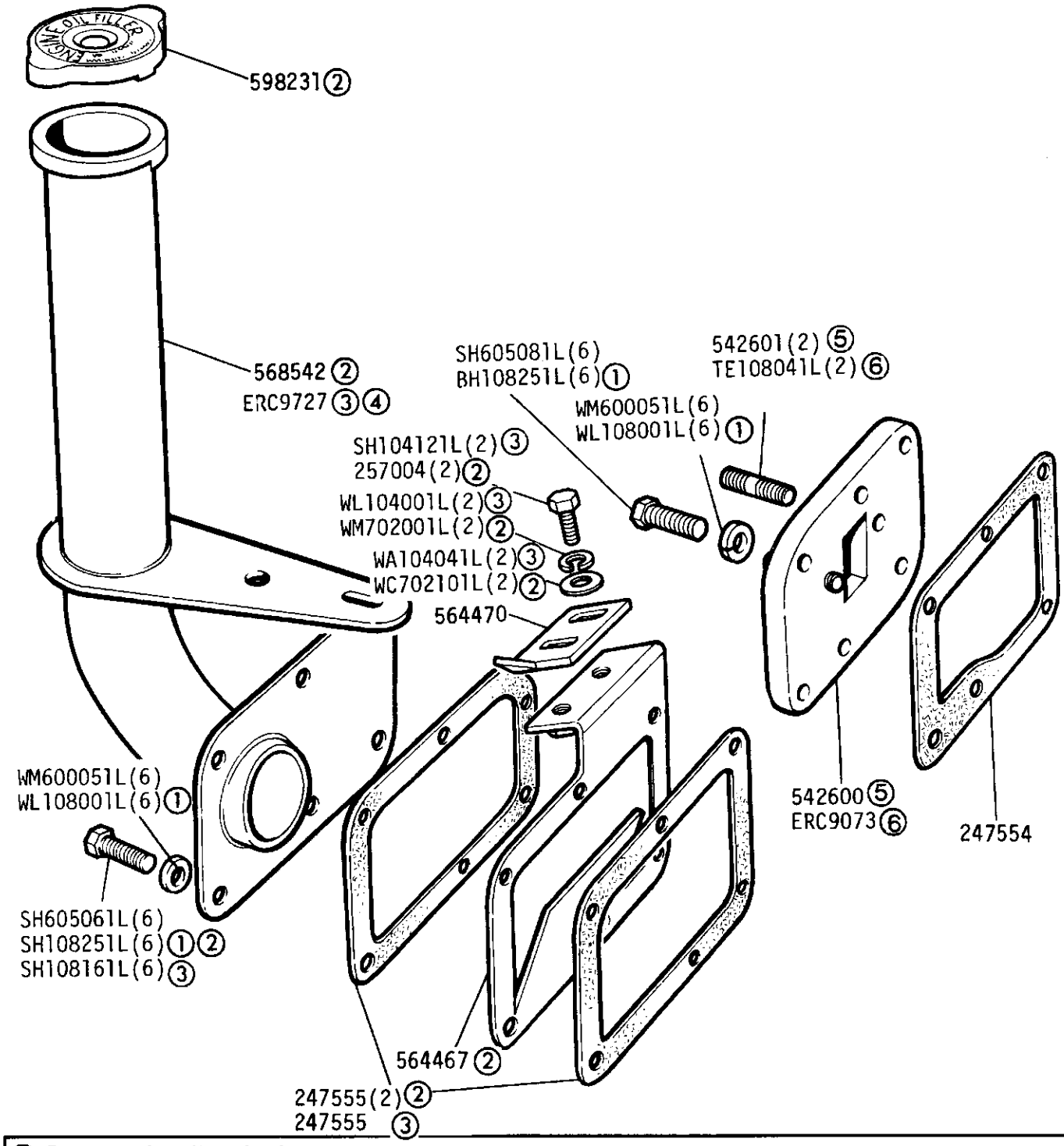

① From engine No. 36619420B
② Up to engine number 36623742B
③ Change to oil filler in Rocker Cover from engine number 36623742B
④ Blanking plate
⑤ All engines prefix 906 and suffix 'A' and 'B' for engines prefix 366
⑥ Engine prefix 366 suffix 'C' onwards

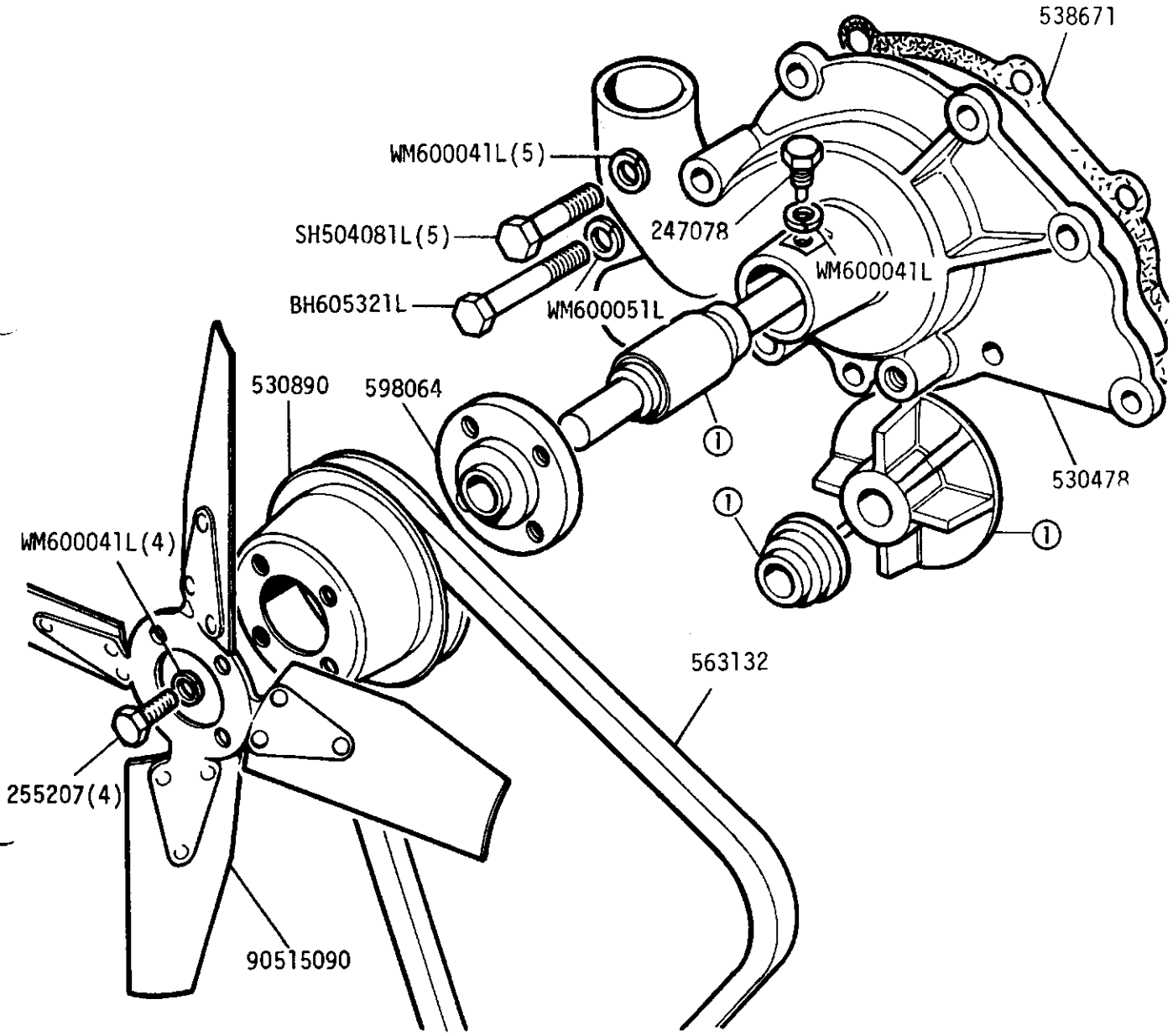

Water pump assembly ERC9178
(1) Water pump overhaul kit RTC3072

GROUP B
ENGINE - Water Pump and Viscous Fan 2¼ Litre Diesel

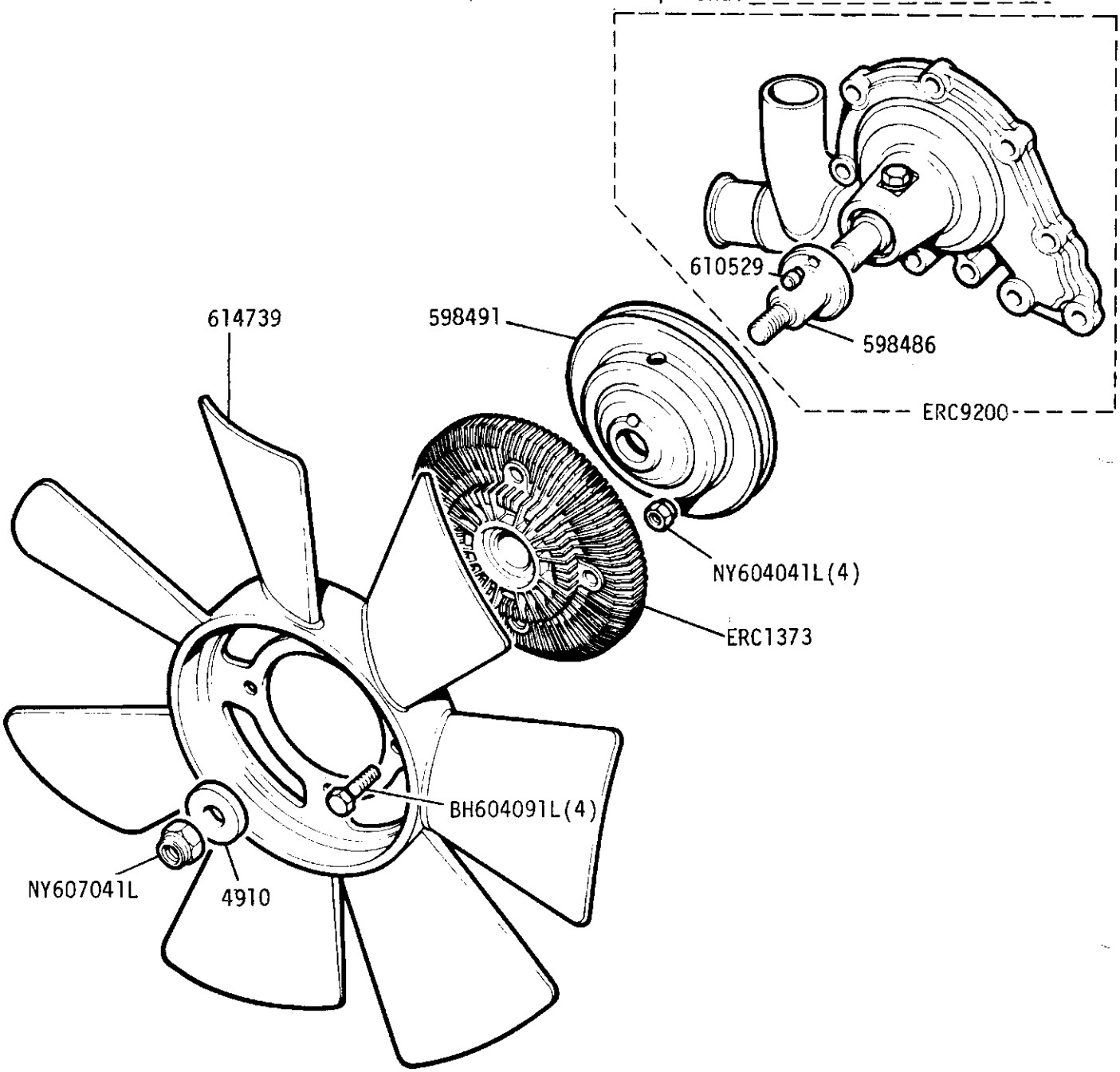

ENGINE - Thermostat and Housing 2¼ Litre Diesel

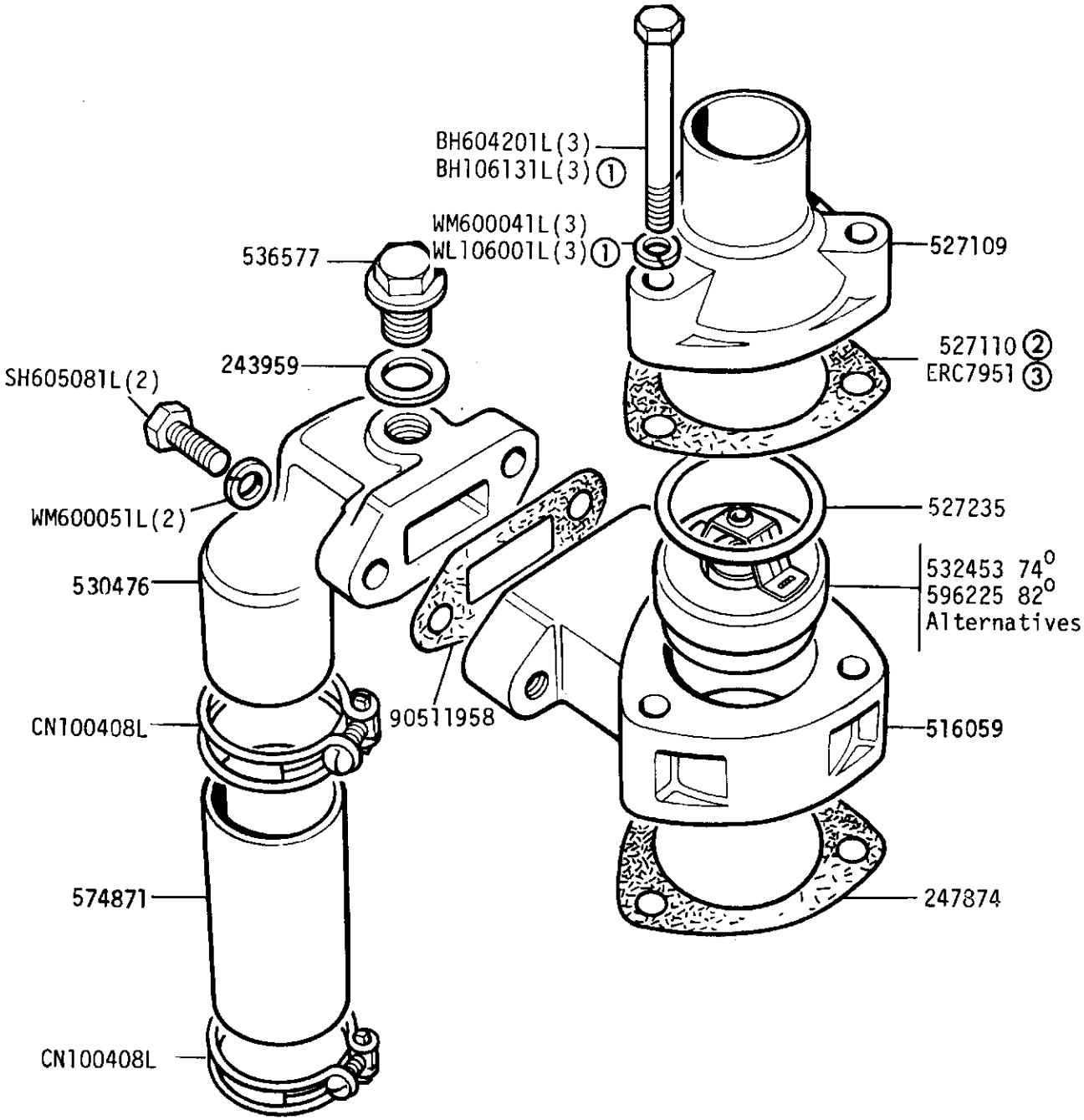

① From engine No. 36619420B
② 3 bearing crankshaft engine
③ 5 bearing crankshaft engine

GROUP B

ENGINE - Cylinder Head Assembly 2¼ Litre Diesel

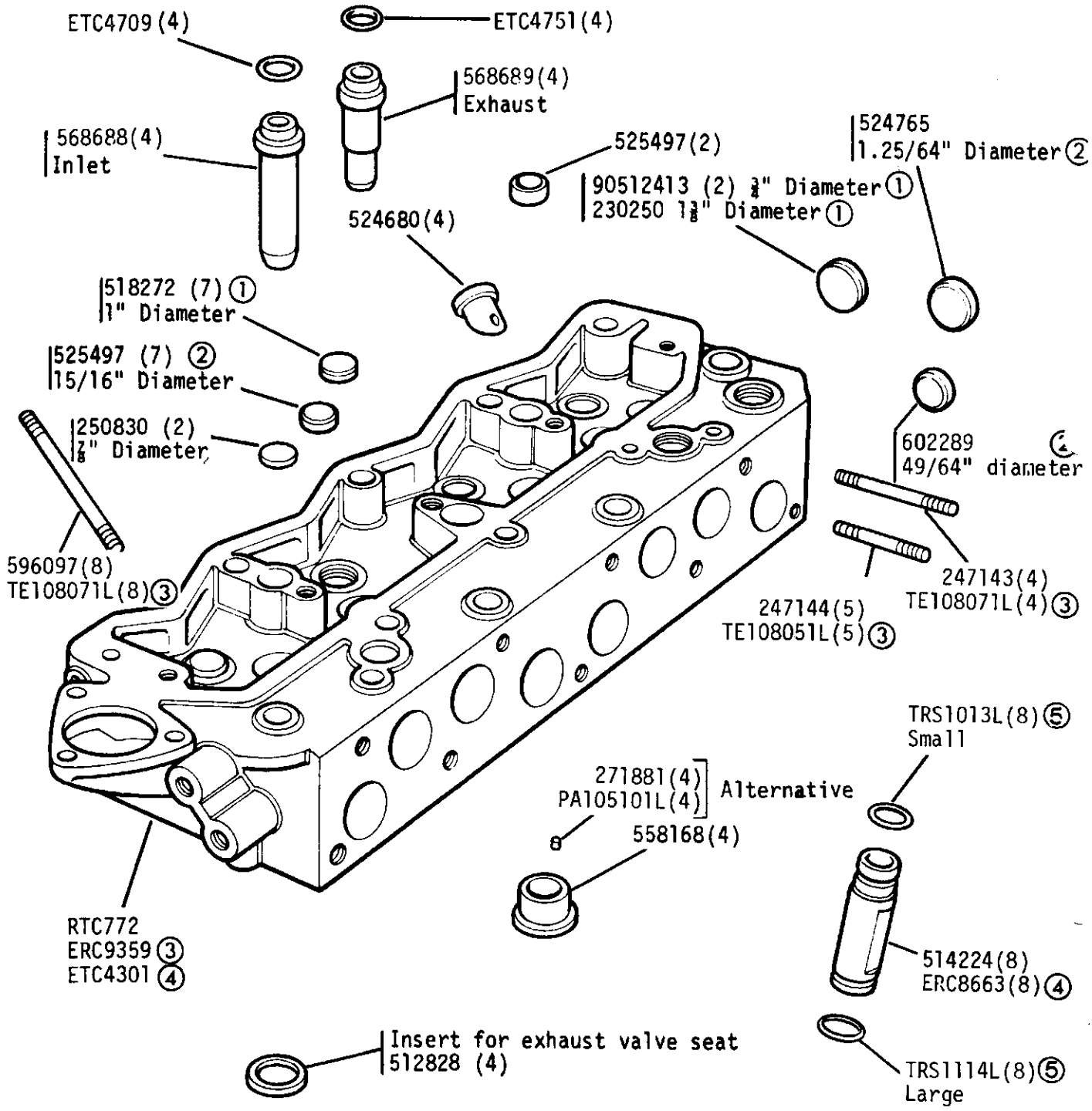

① Use with cylinder head 605480

② Use with cylinder head RTC772

③ From engine No. 36619420B

④ From engine number 36623972B

⑤ Not required from engine number 36623972B

ENGINE - Cylinders Head Fixings and Heater Plugs 2¼ Litre Diesel

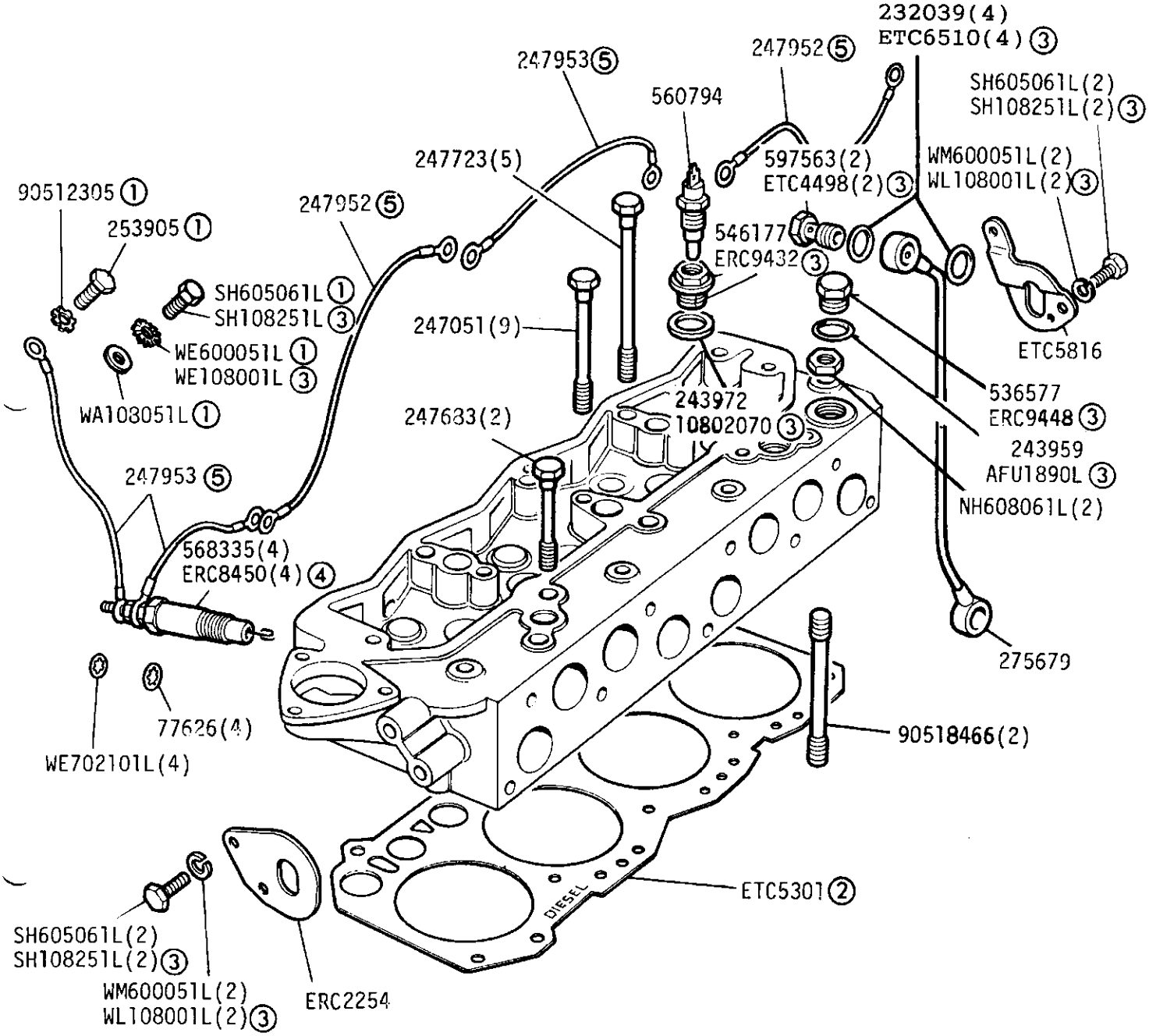

① Alternative fixings. Check before ordering

② Note: Also use ERC6821(18) Washer for cylinder head bolts with this gasket.

③ From engine number 36619420B

④ From engine number 36623972B

⑤ Not required after engine number 36623972B use PRC4175(1) cable assembly.

Kit for fitting metric cylinder head to imperial cylinder block RTC2956.

GROUP B

ENGINE - Rocker Cover 2¼ Litre Diesel

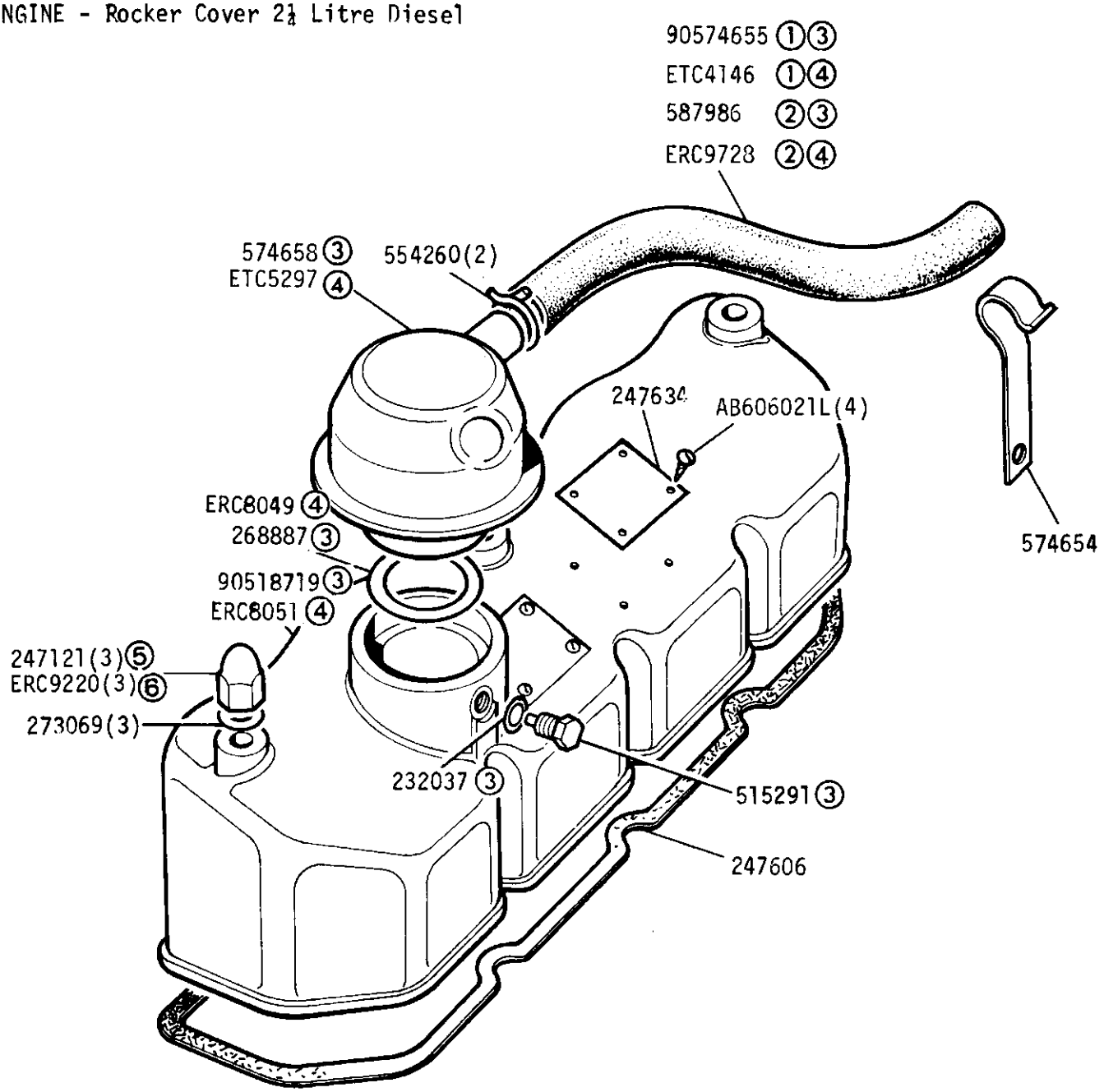

① Vehicles without Servo

② Vehicles with Servo

③ Up to engine number 36623742B

④ From engine number 36623742B

⑤ All engine prefix 906 and suffix 'A' & 'B' for engines prefix 366

⑥ Engine prefix 366 suffix 'C' onwards

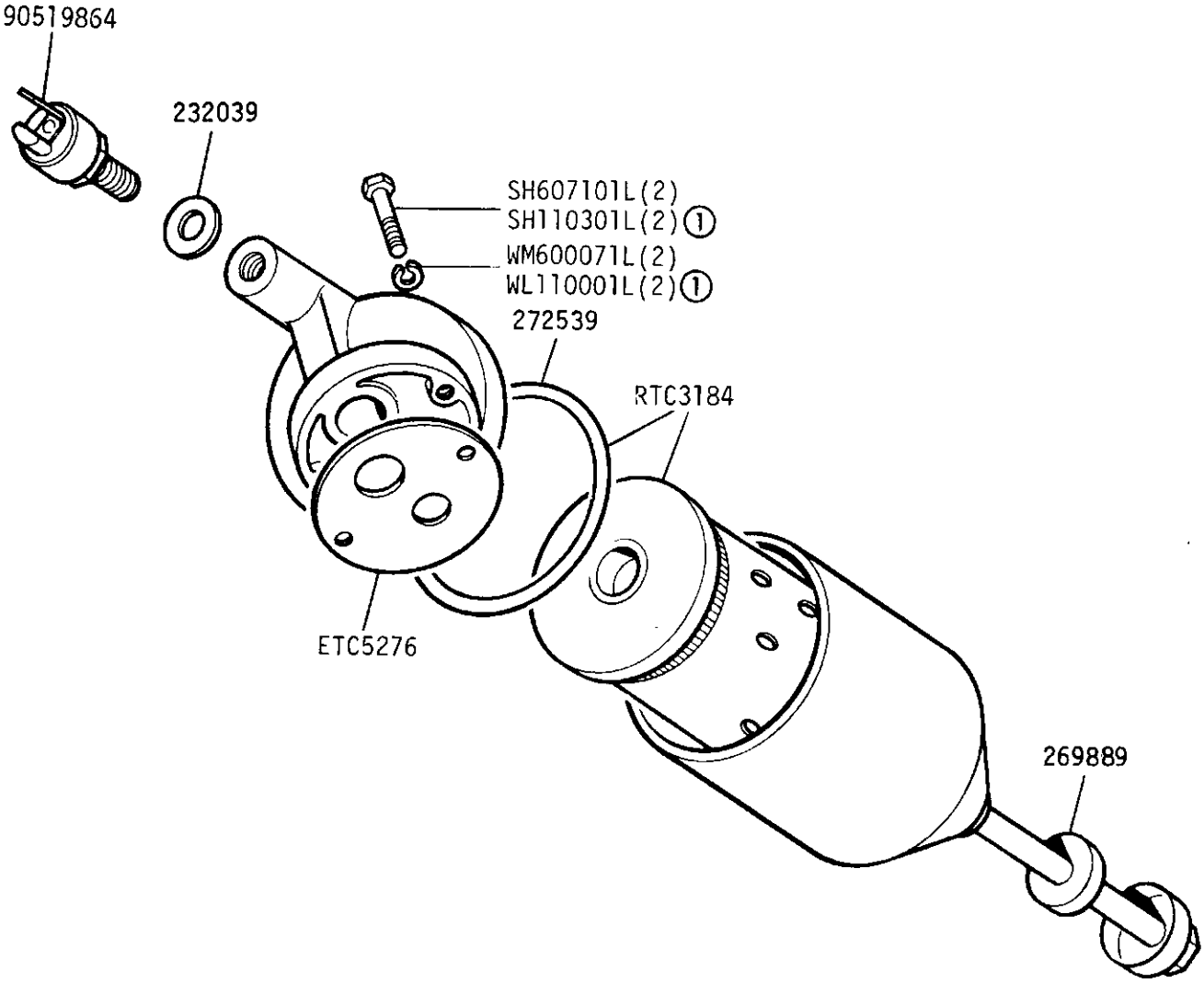

Oil Filter assembly 537229

① From engine No. 36619420B

GROUP B
ENGINE - Manifolds 2¼ Litre Diesel

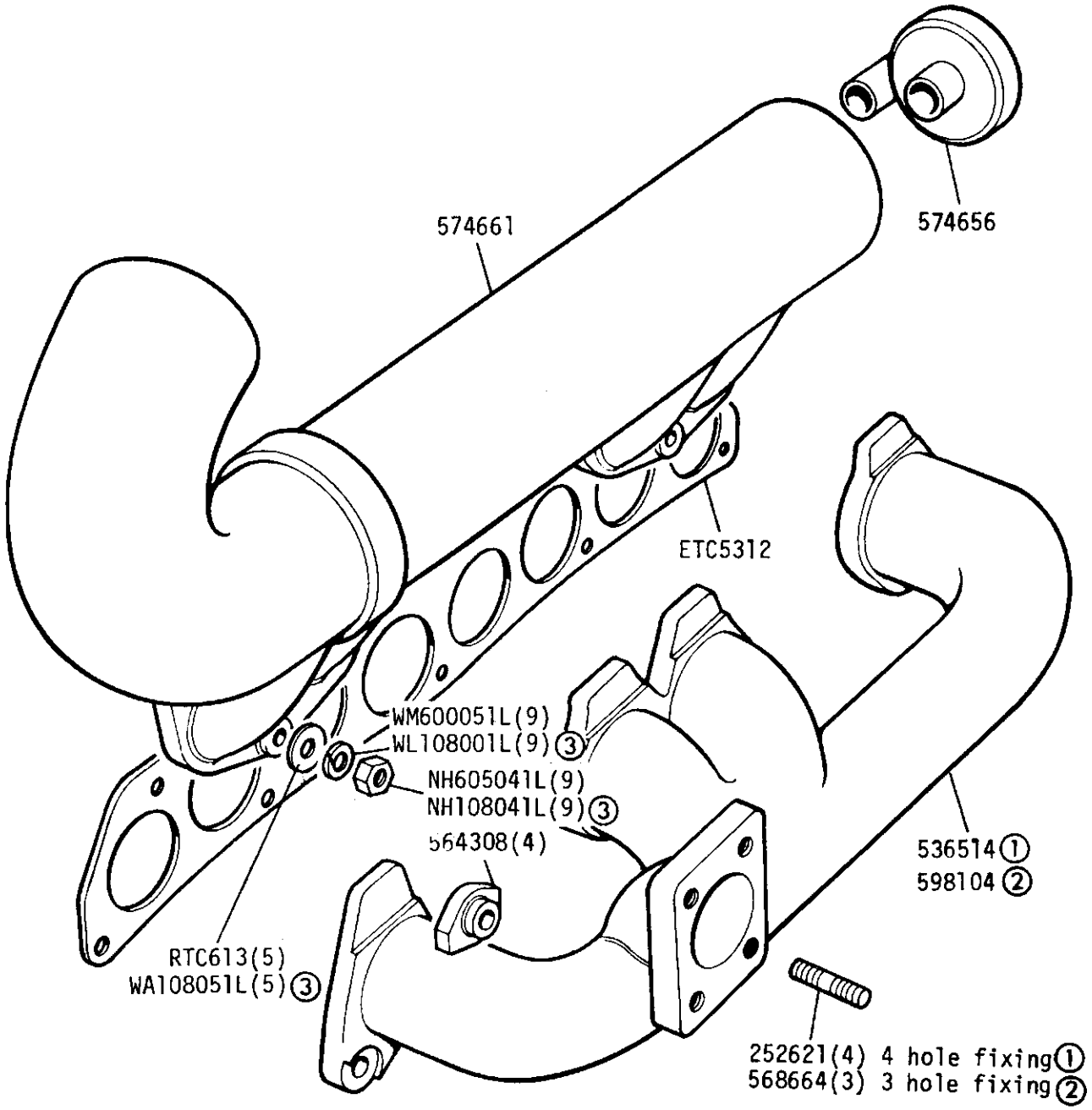

① Up to Engine suffix 'B' inclusive Four hole fixings
② From Engine suffix 'C' onwards Three hole fixings
③ From engine No.36619420B

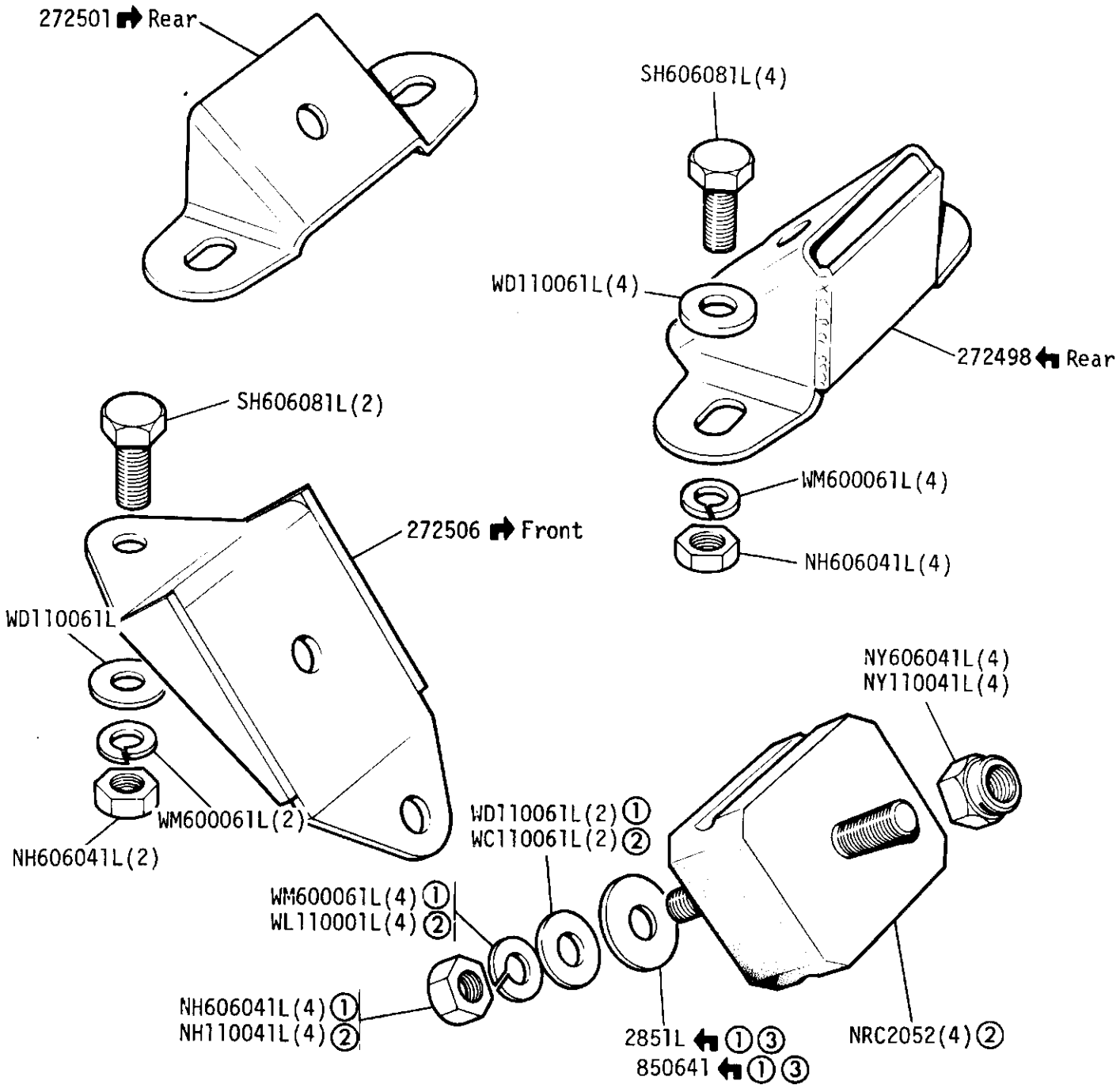

① UNF Fixings
② Metric Fixings
③ Front Mounting only

ENGINE - Service engines 109 V8, 8.13: 1 Compression ratio

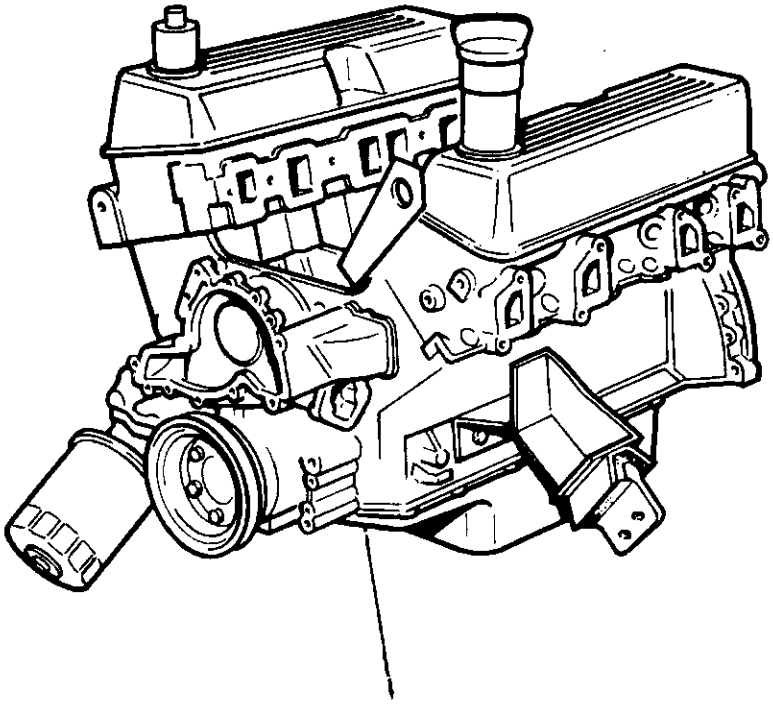

① RTC3637N

② RTC2600N
RTC2600R

Typical illustration

① Detoxed to ECE 15-03 Engine prefix 11G
② Non detoxed and detoxed prior to ECE 15-03
less water pump, carburetter, starter motor, alternator etc
Short engine assembly RTC2373, comprising block, crankshaft and pistons

GROUP B
ENGINE - Cylinder Block 109 V8

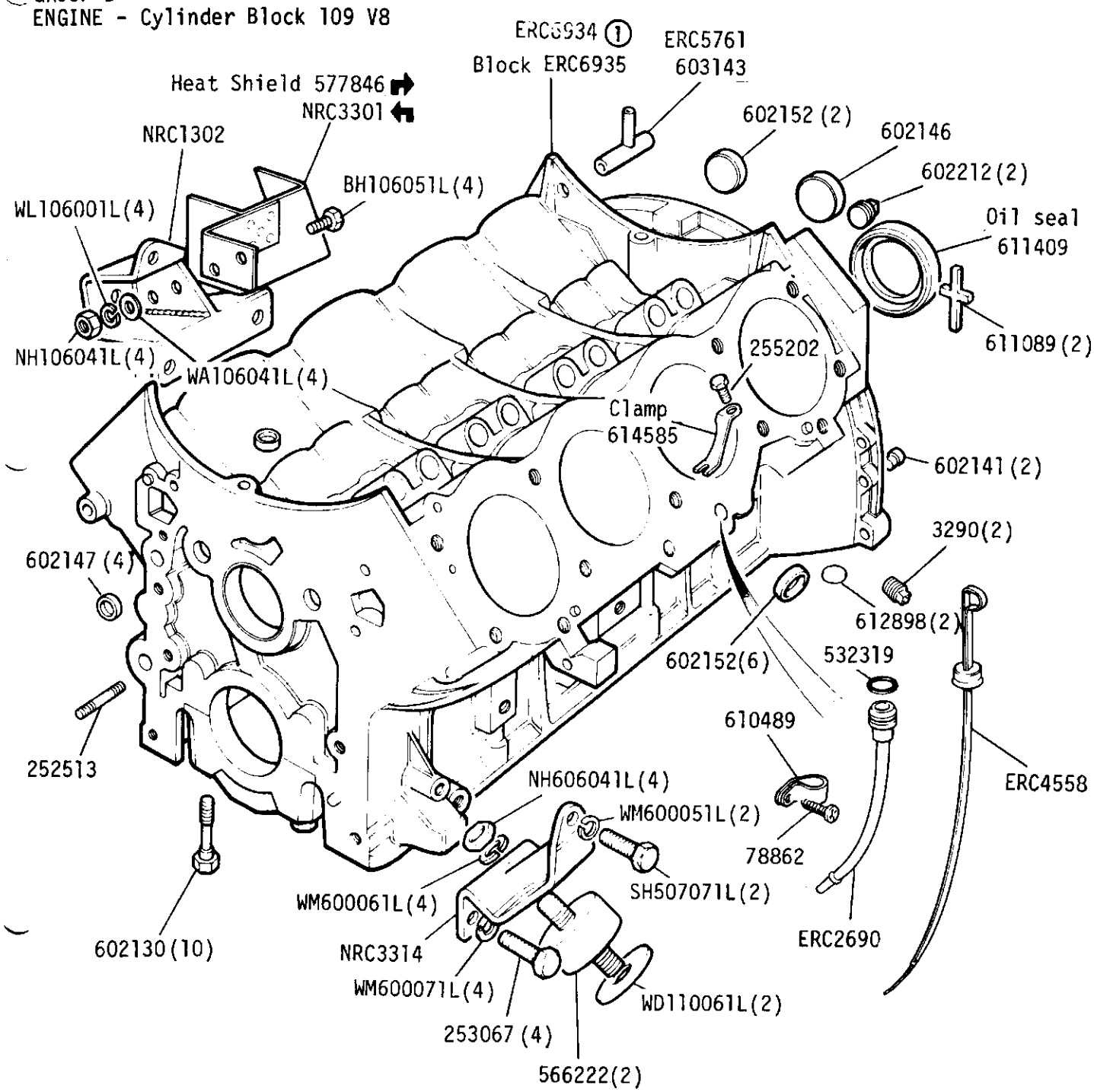

① For use on detoxed vehicles built to ECE 15-03

GROUP B
ENGINE - Sump and Filter 109 V8

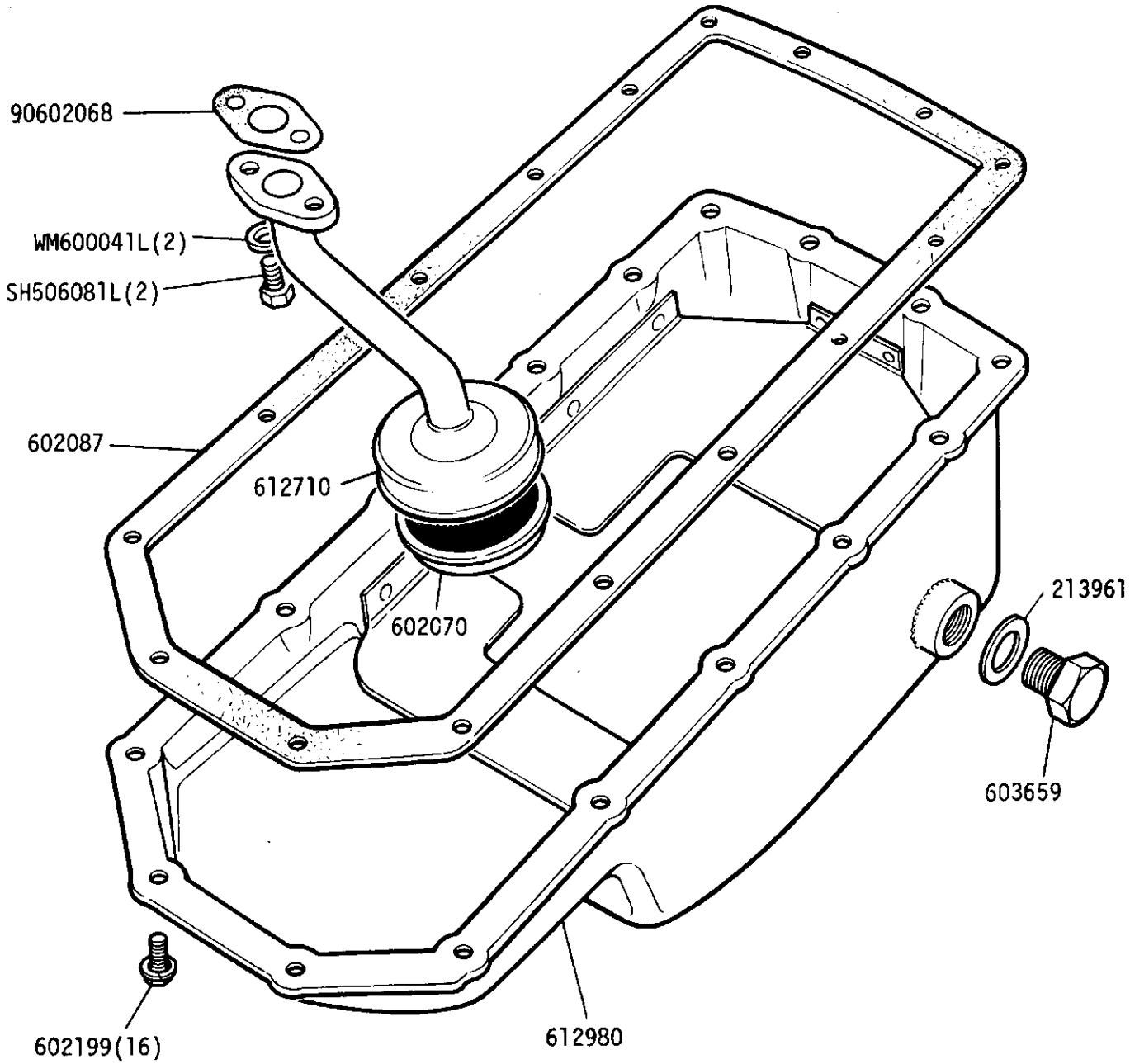

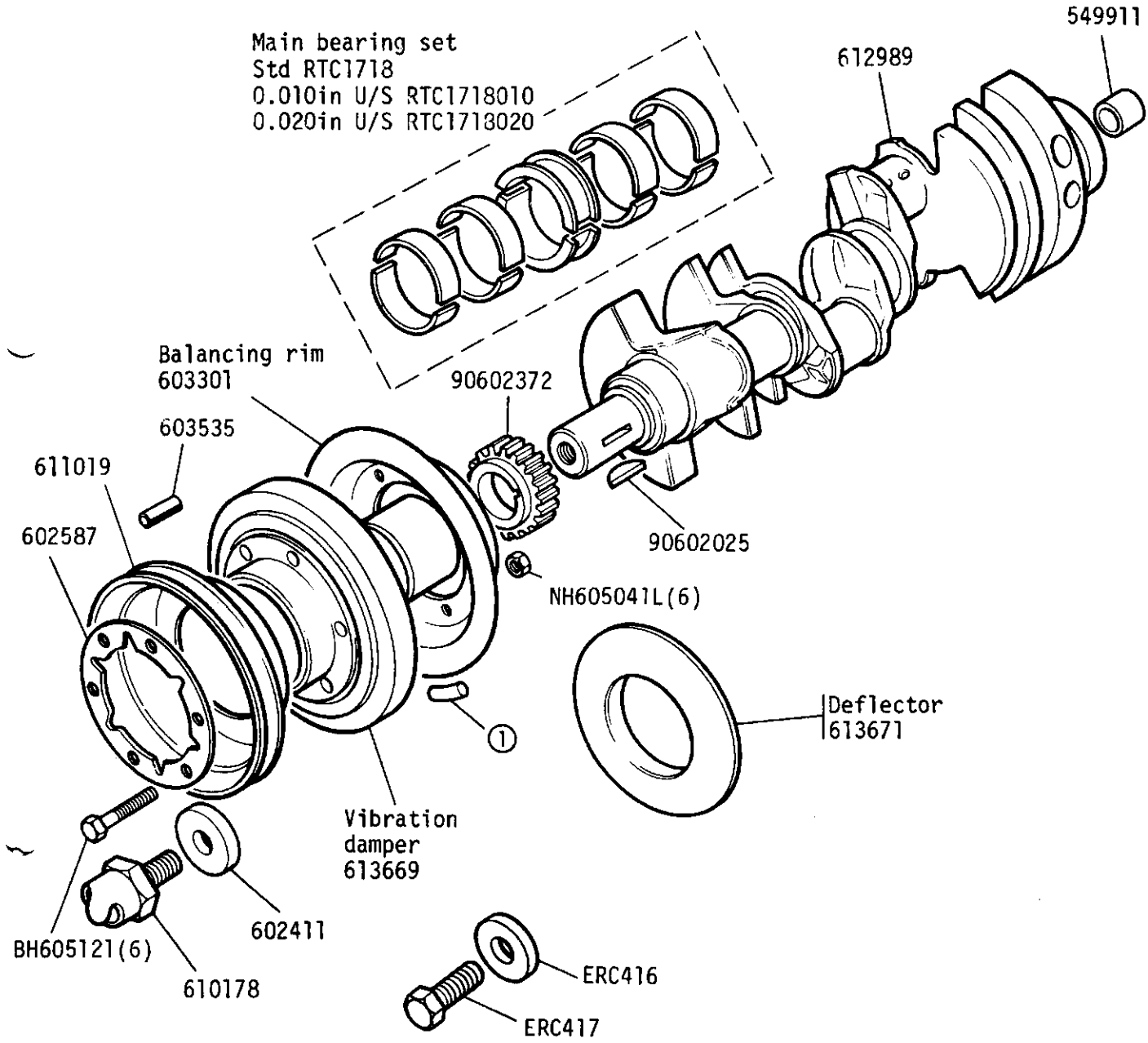

① Balance weights, as required
- ·180oz ERC4877
- ·360oz ERC4878
- ·540oz ERC4879
- ·720oz ERC4880

GROUP B
ENGINE - Pistons, 8.13:1 Compression Ratio 109 V8

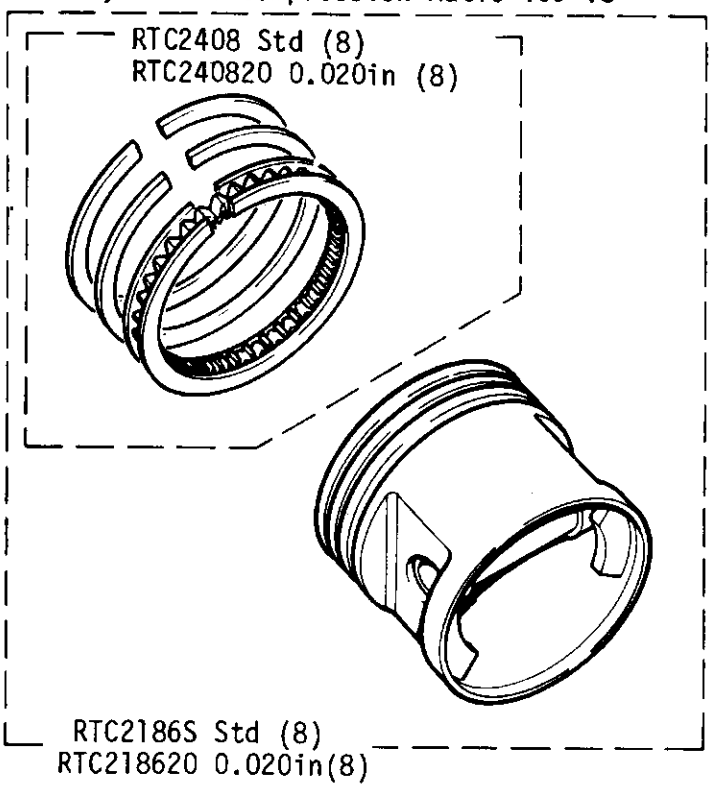

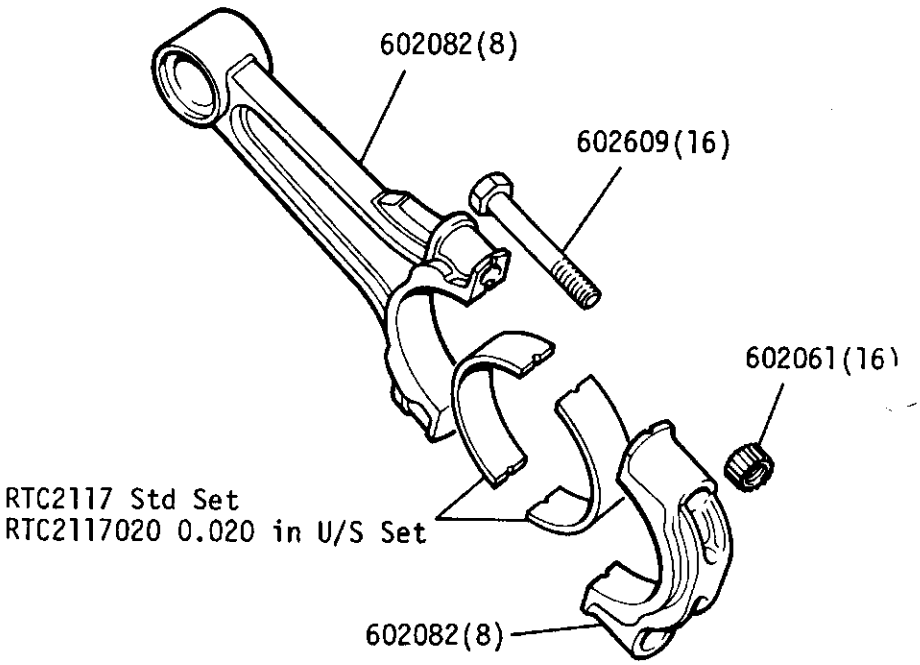

ENGINE - Front Cover 109 V8

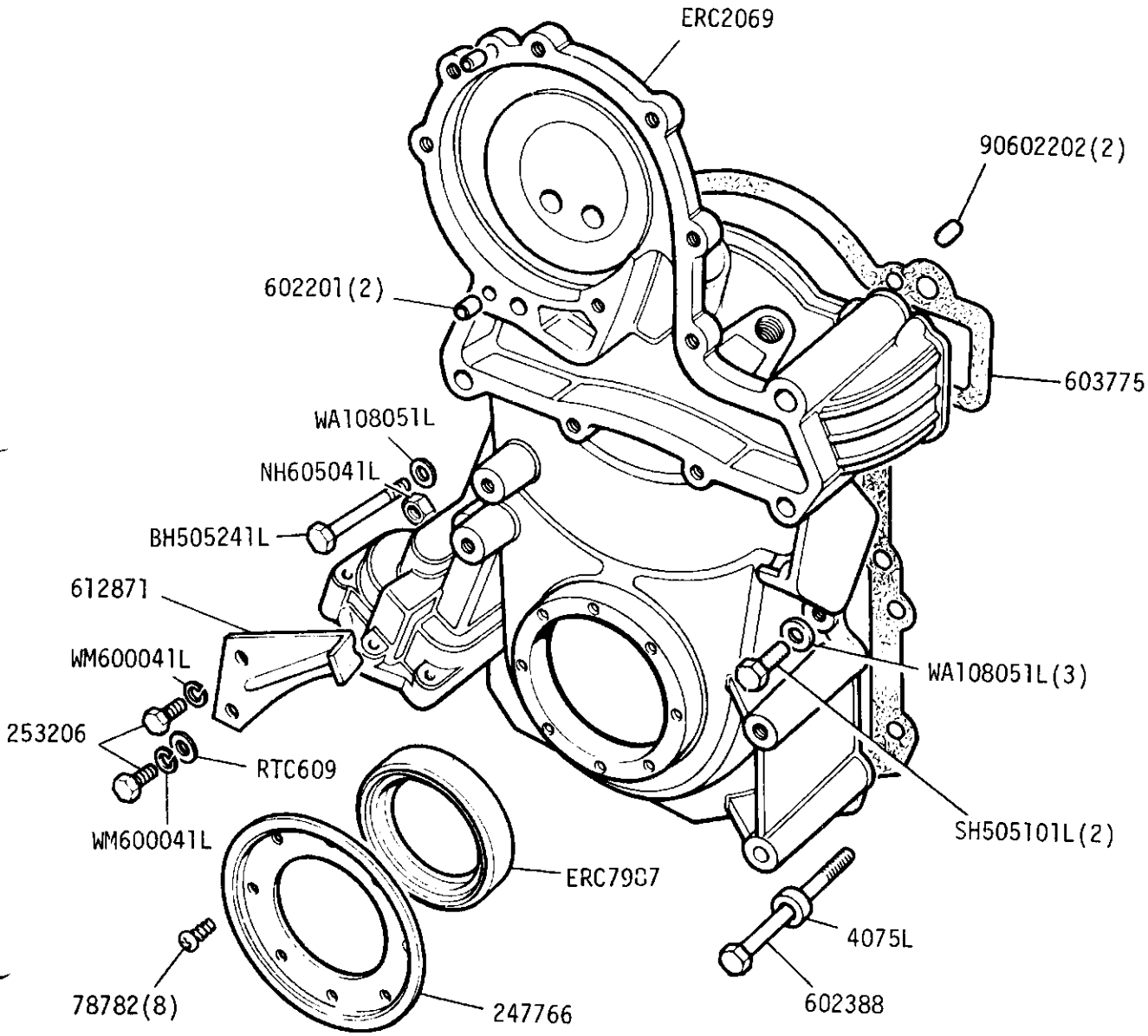

GROUP B
ENGINE - Oil Pump 109 V8

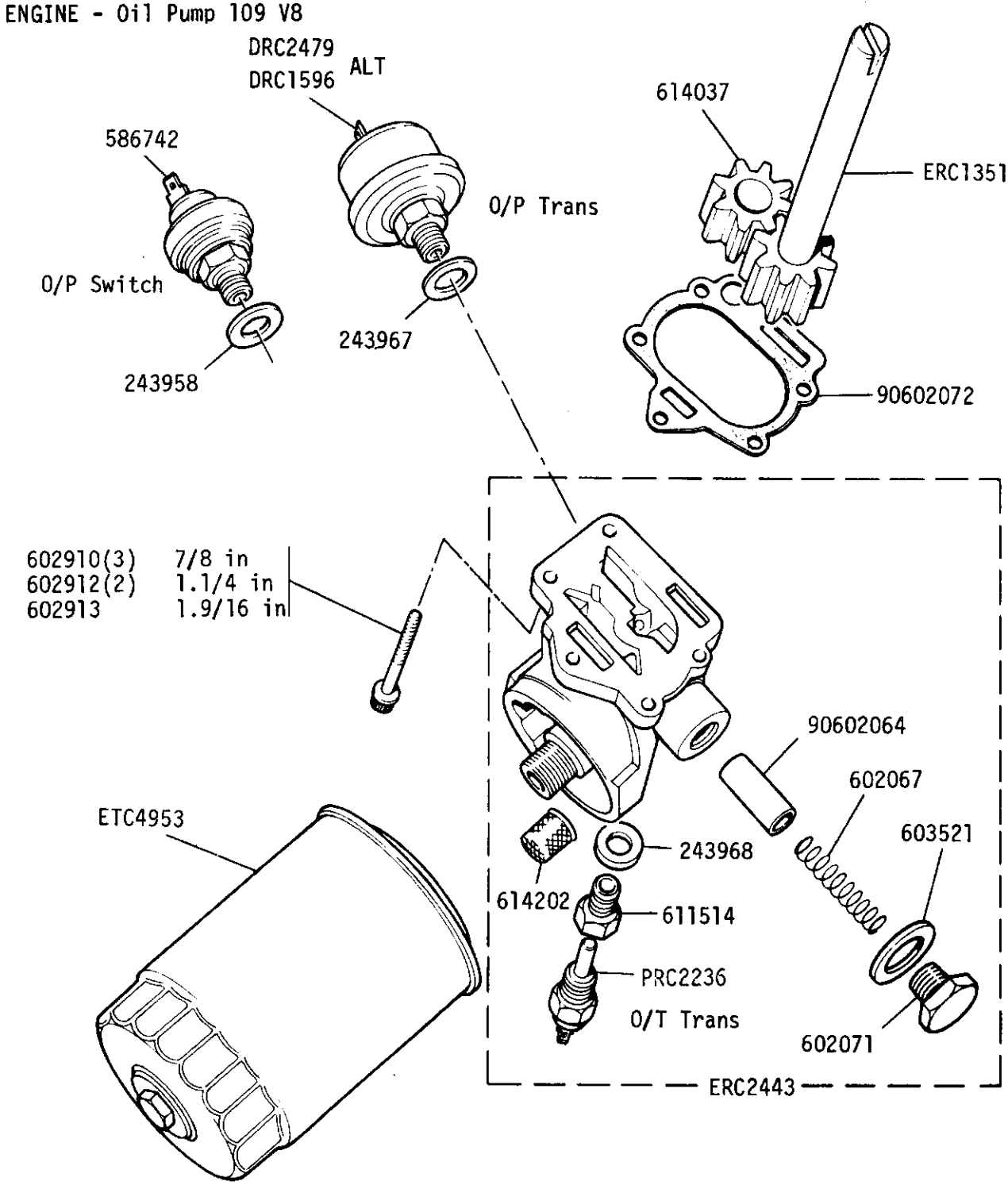

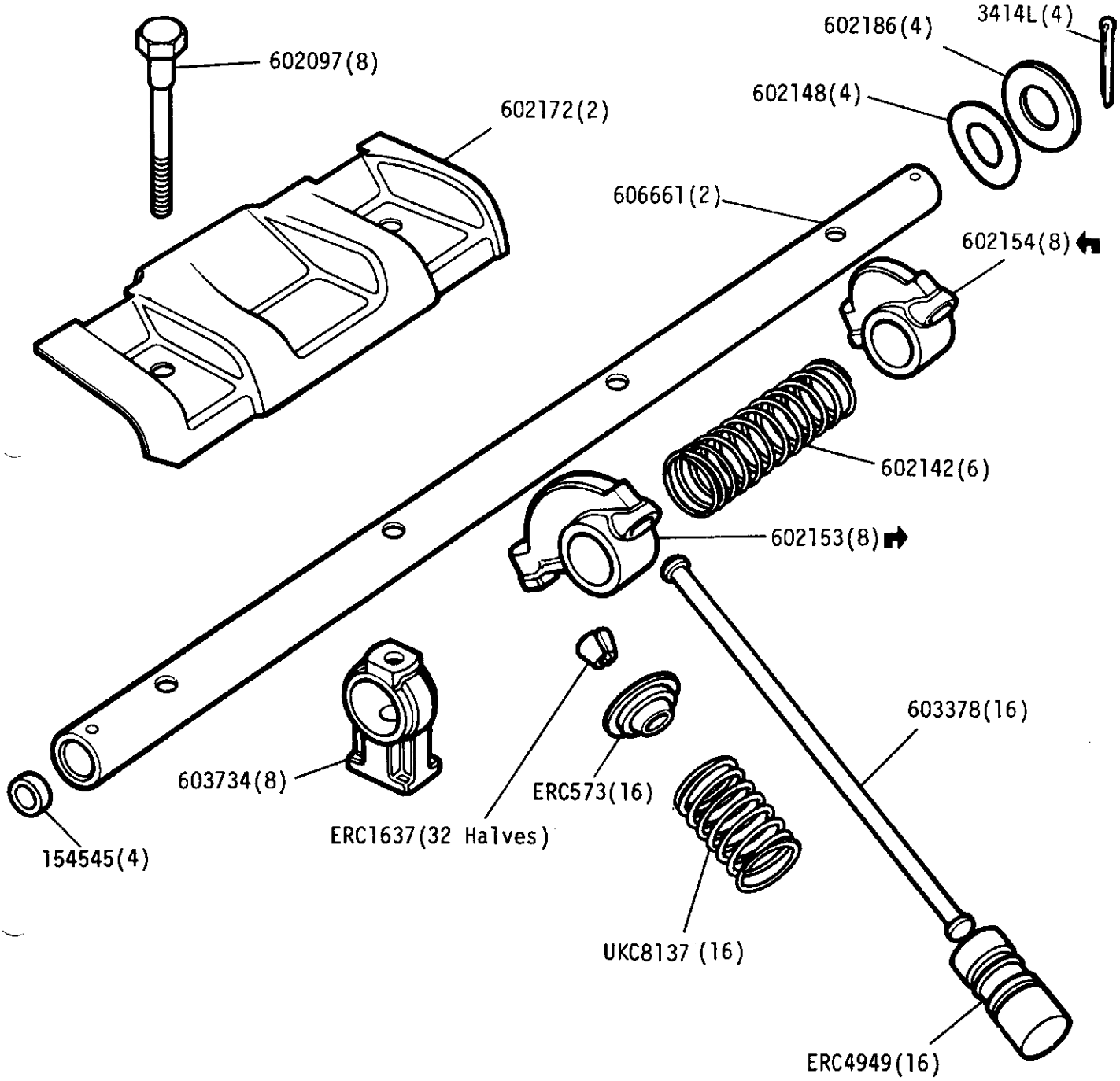
602097(8)
602172(2)
602186(4)
3414L(4)
602148(4)
606661(2)
602154(8)
602142(6)
602153(8)
603378(16)
603734(8)
ERC573(16)
ERC1637(32 Halves)
154545(4)
UKC8137 (16)
ERC4949(16)

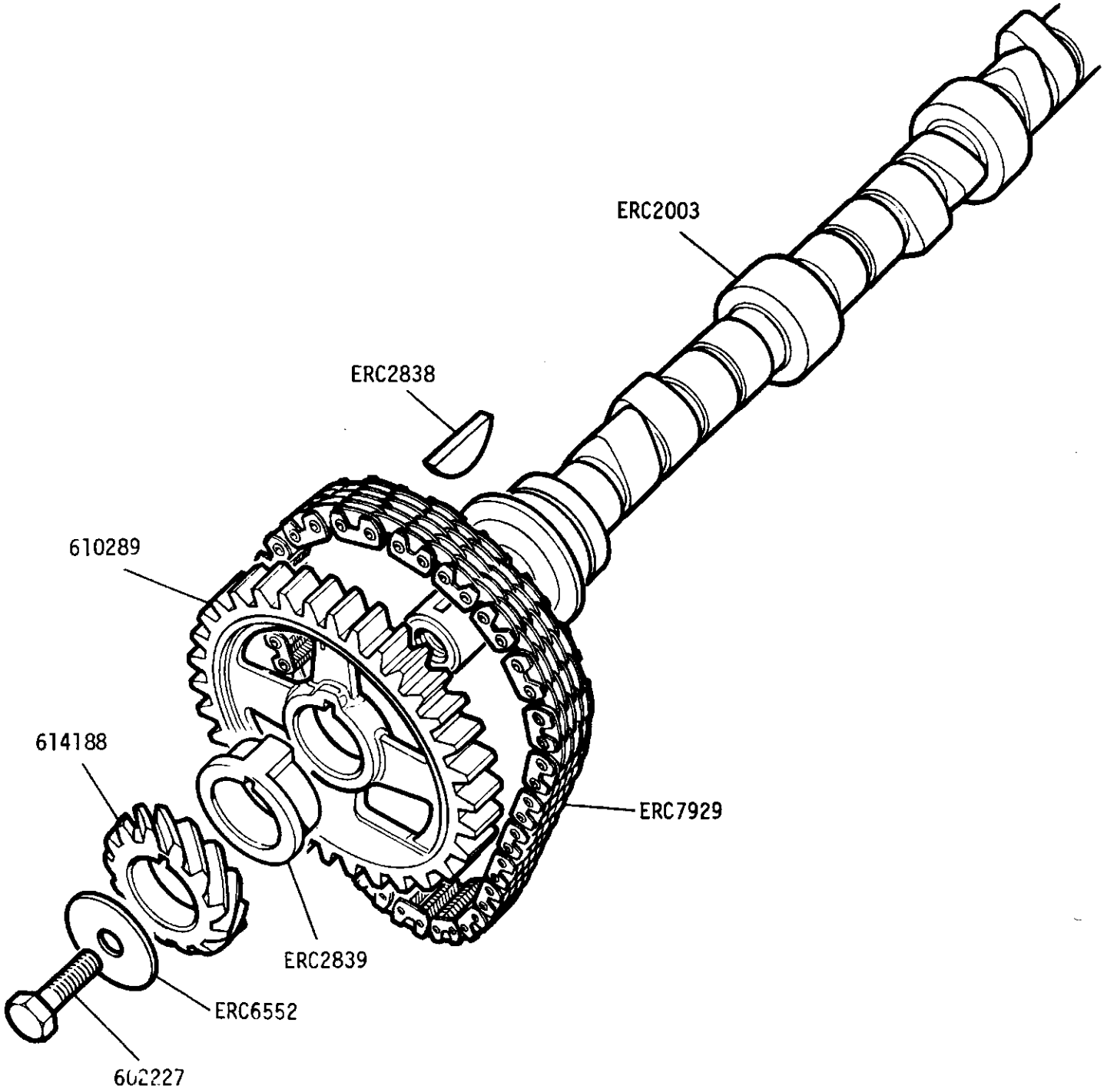
ERC2003
ERC2838
610289
614188
ERC7929
ERC2839
ERC6552
602227

ENGINE - Inlet Manifold and Thermostat Switch 109 V8

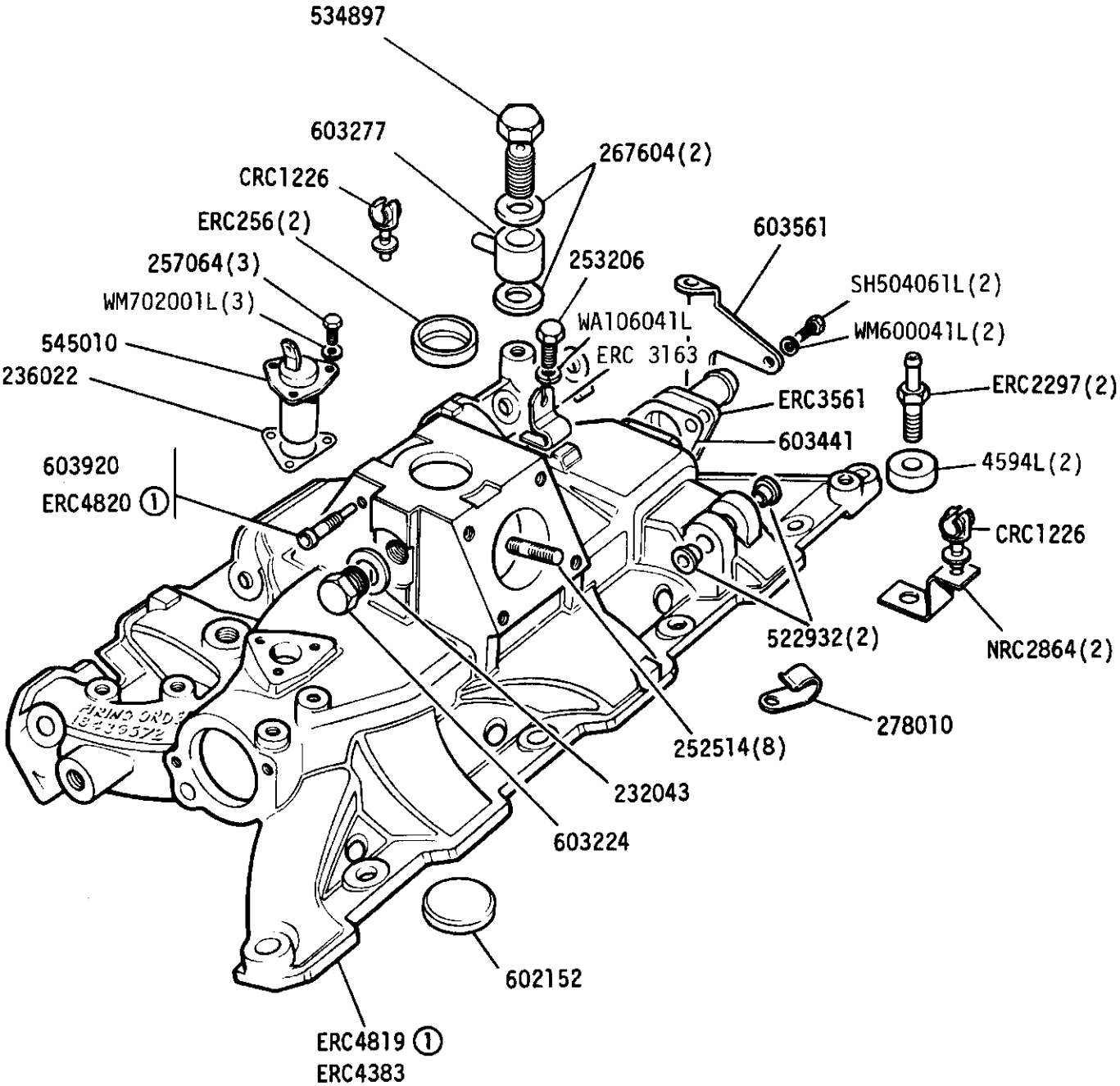

① Vehicles built to ECE 15-03

GROUP B
ENGINE - Inlet Manifold pipes and hoses 109V8

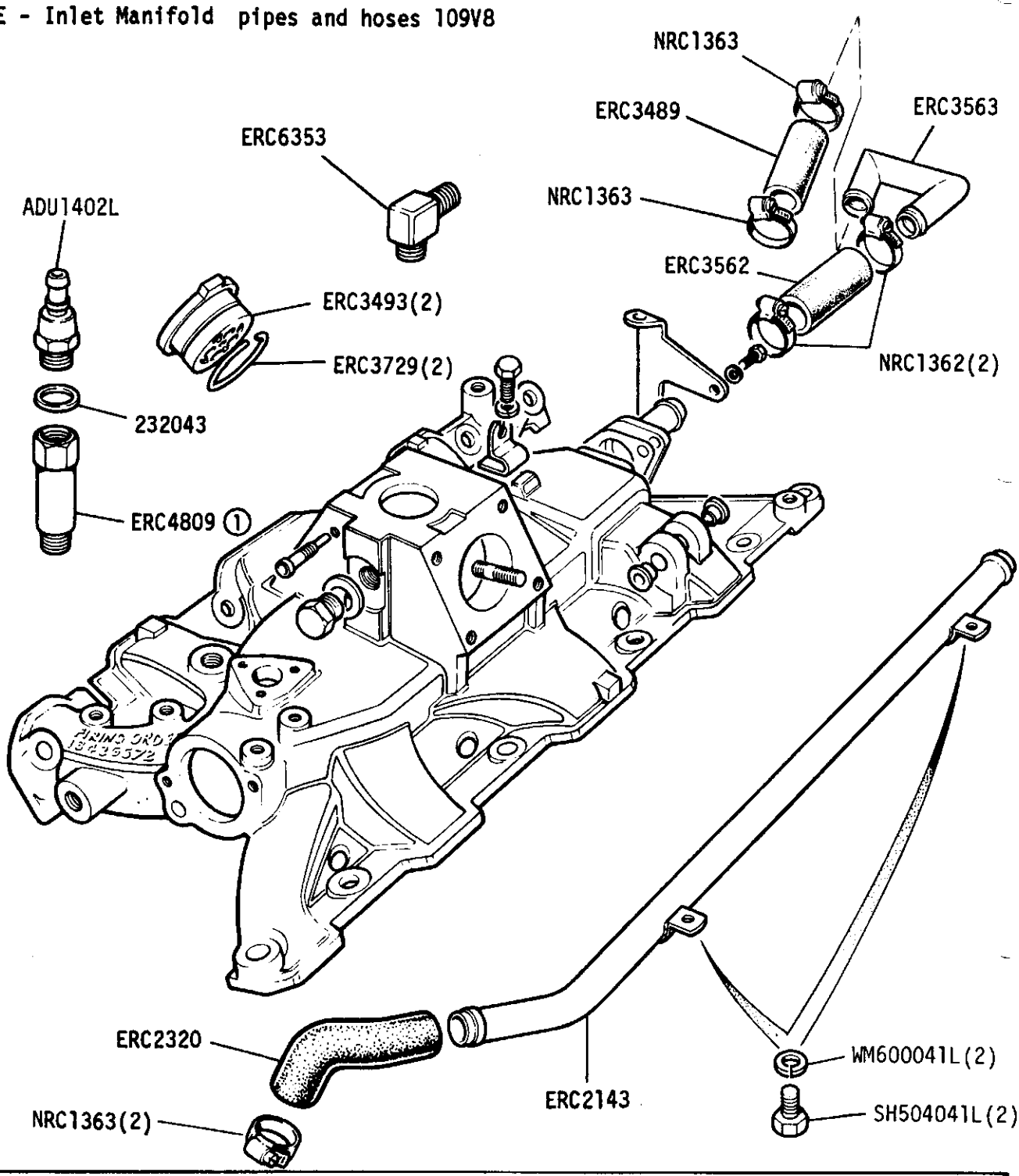

① Vehicles built to ECE 15-03

ENGINE - Thermostat, Inlet Manifold fixings and Outlet pipes 109 V8

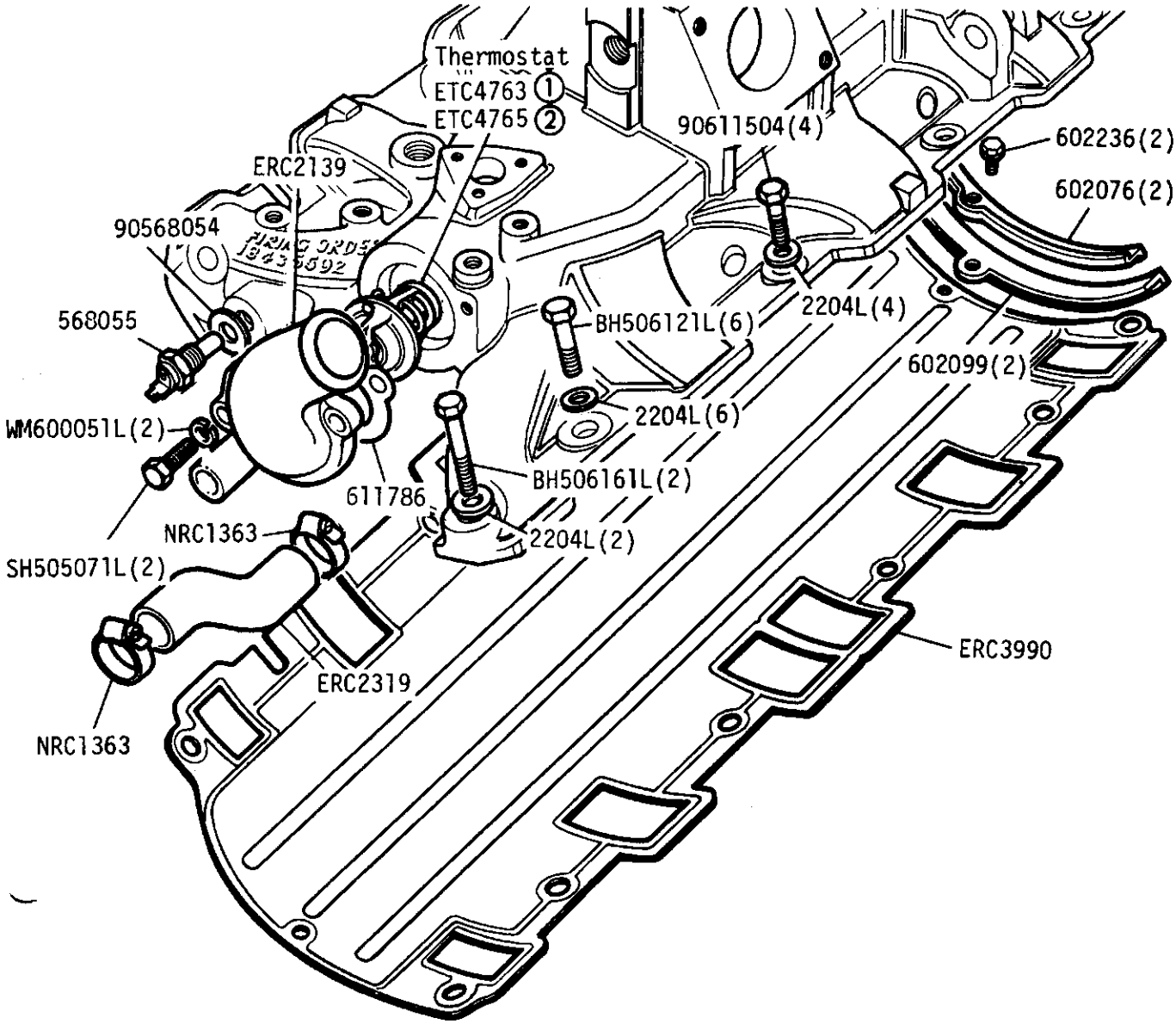

① Non-detoxed engine

② Detoxed engine

GROUP B
ENGINE - Exhaust manifold 109 V8

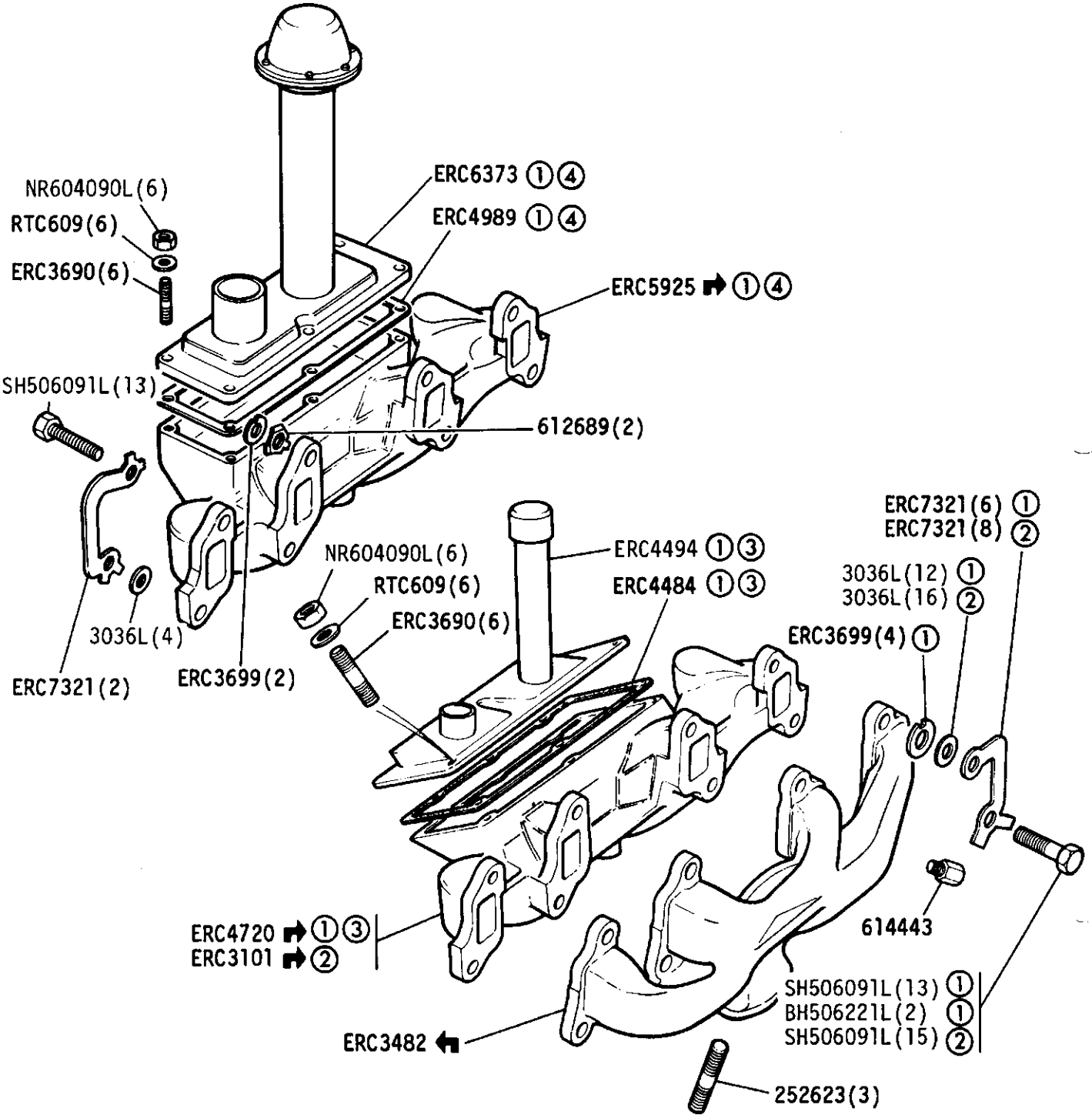

① Detoxed engine
② Non detoxed engine
③ Up to engine No 11G00856
④ From engine No 11G00857

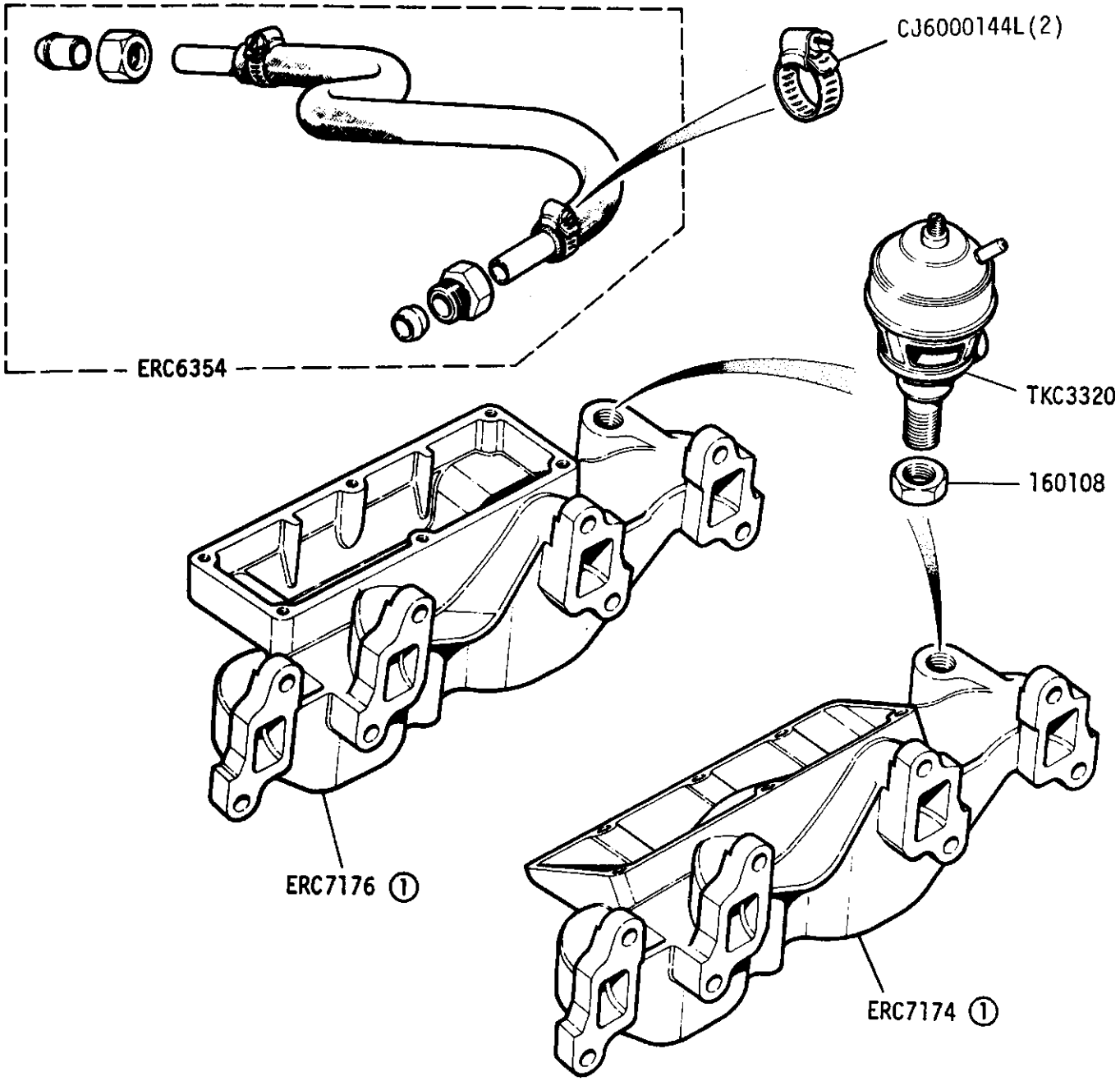

Vehicles built to ECE 15-03
① Alternatives ERC7174 suitable for LHD vehicles only

GROUP B
ENGINE - Heat Shields 109 V8

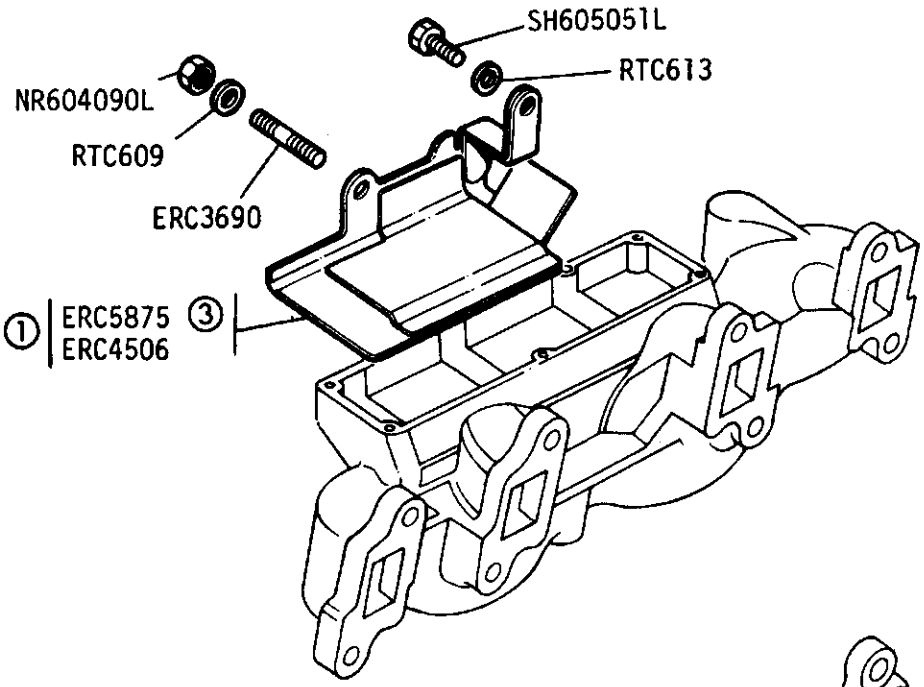

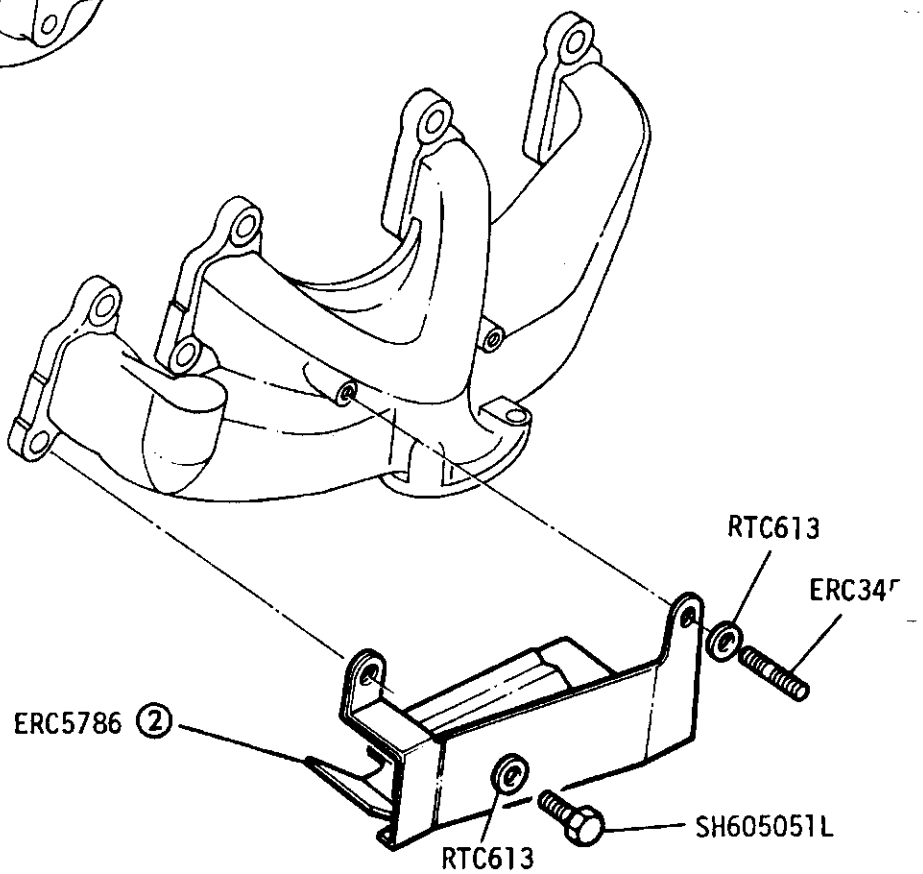

① DETOXED ENGINE

② NON DETOXED ENGINE

③ FROM ENGINE NO 11G00857

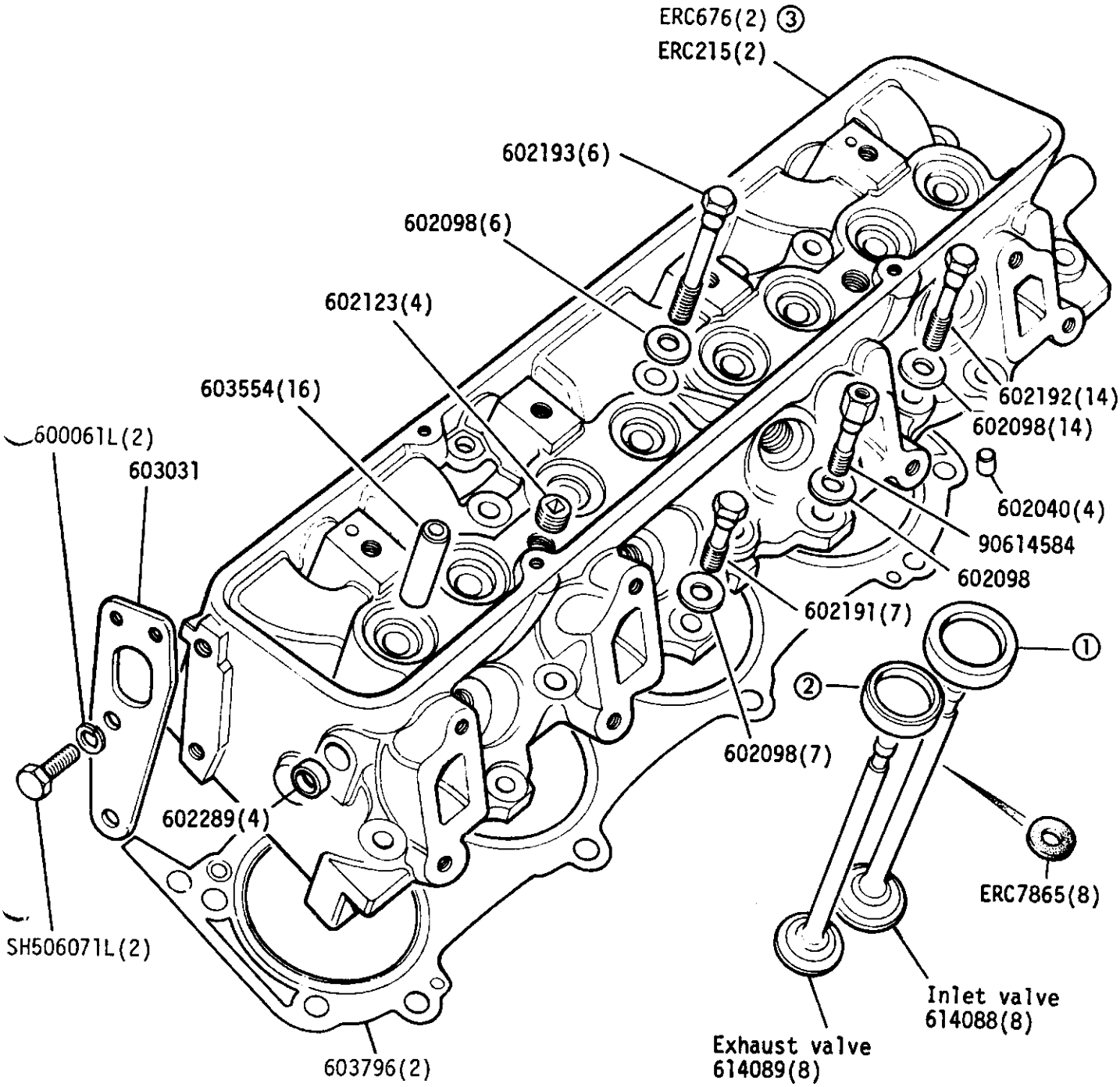

①	Valve seat, inlet, Std	(8)	ERC224
	Valve seat, inlet, 0.010in O/S	(8)	ERC225
②	Valve seat, exhaust, Std	(8)	ERC210
	Valve seat, exhaust, 0.010in O/S	(8)	ERC211

③ For engines built to ECE 15-03

GROUP B
ENGINE - Rocker Cover 109 V8

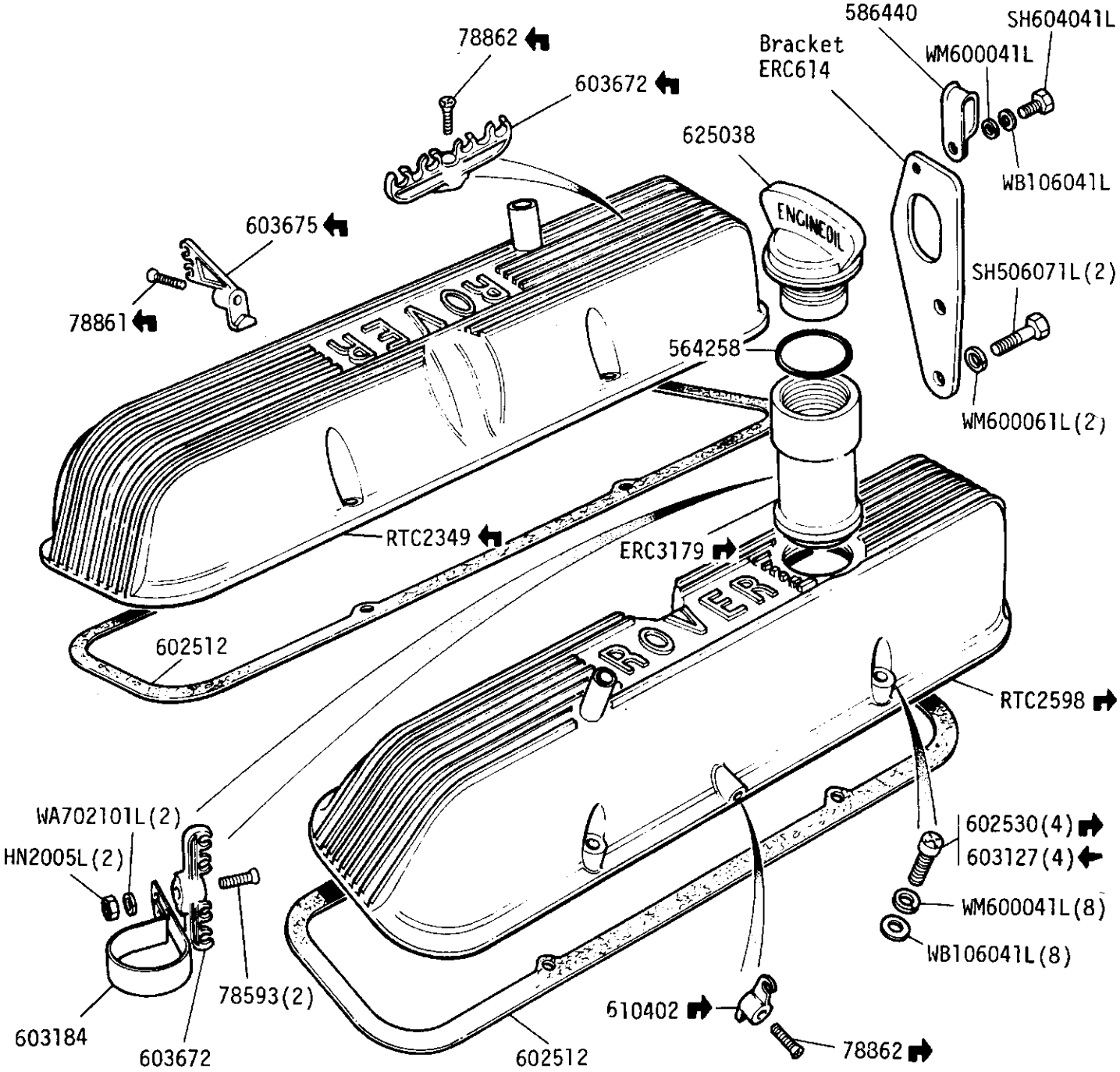

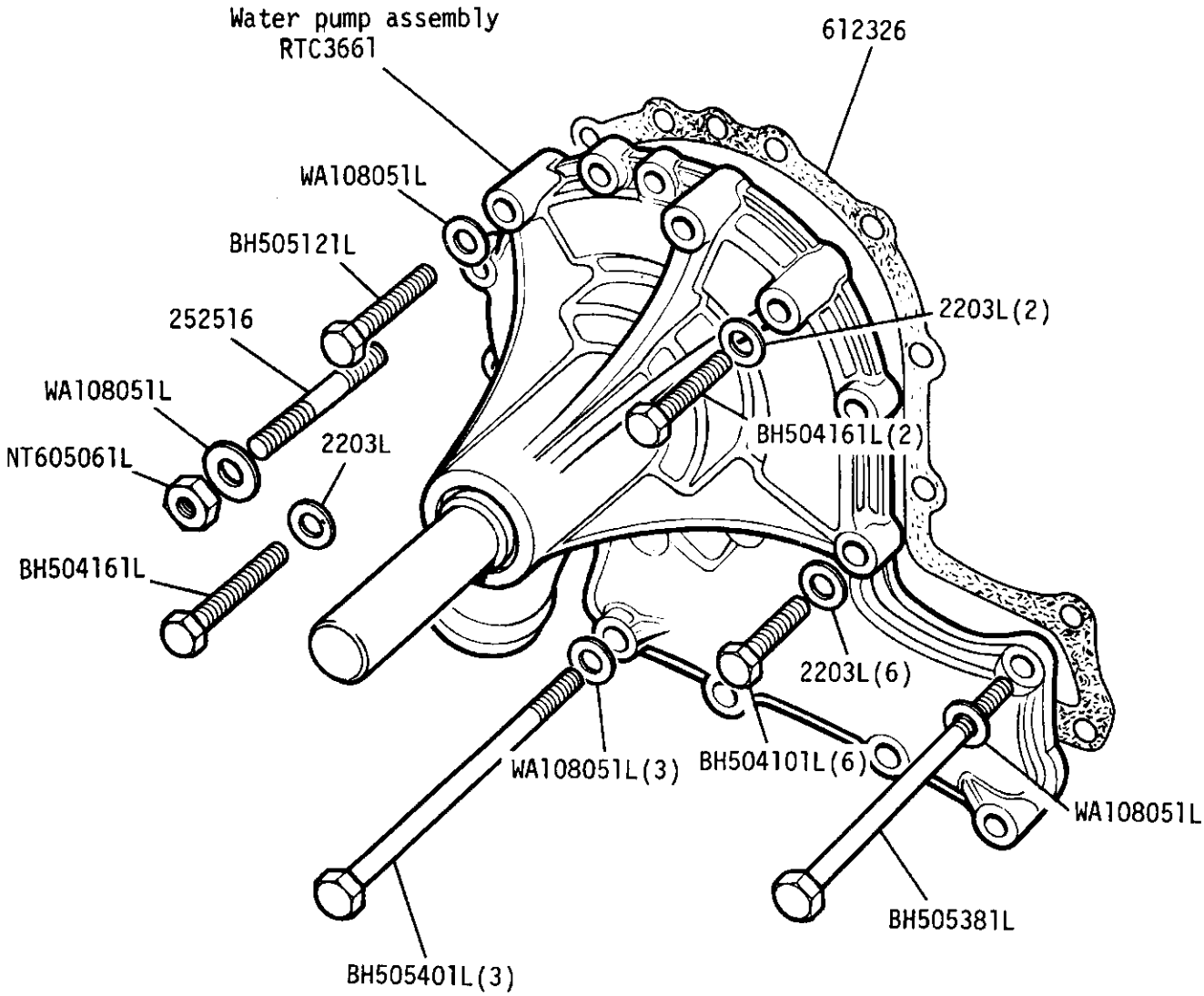
Water pump assembly
RTC3661
612326
WA108051L
BH505121L
252516
WA108051L
NT605061L
2203L
BH504161L
2203L(2)
BH504161L(2)
2203L(6)
WA108051L(3)
BH504101L(6)
WA108051L
BH505381L
BH505401L(3)

GROUP B
ENGINE - Water Pump for Viscous Drive (Detoxed Engine) 109 V8

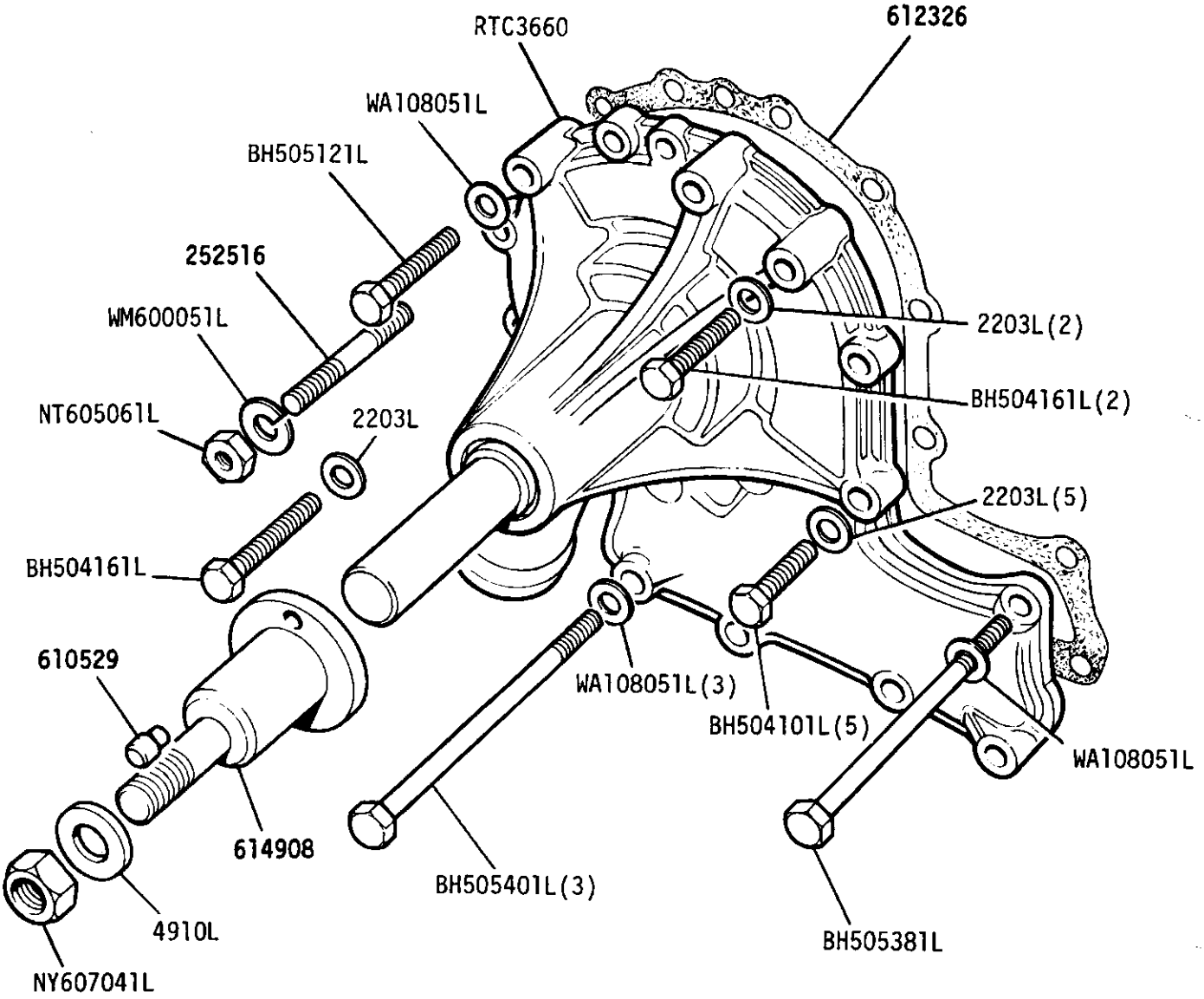

ENGINE - Fan Pulley, Hub and Driving Belt (non-viscous type) 109 V8

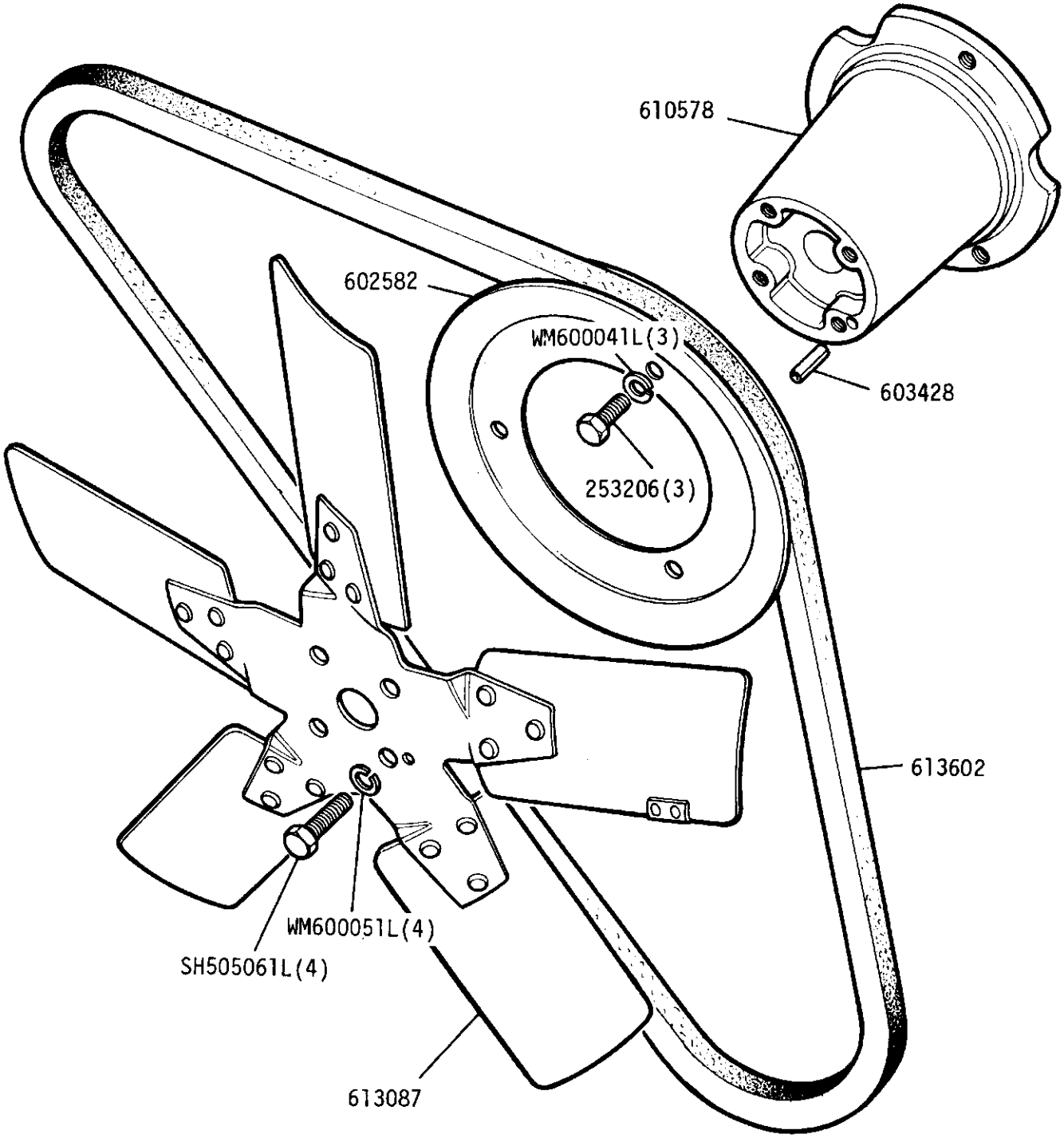

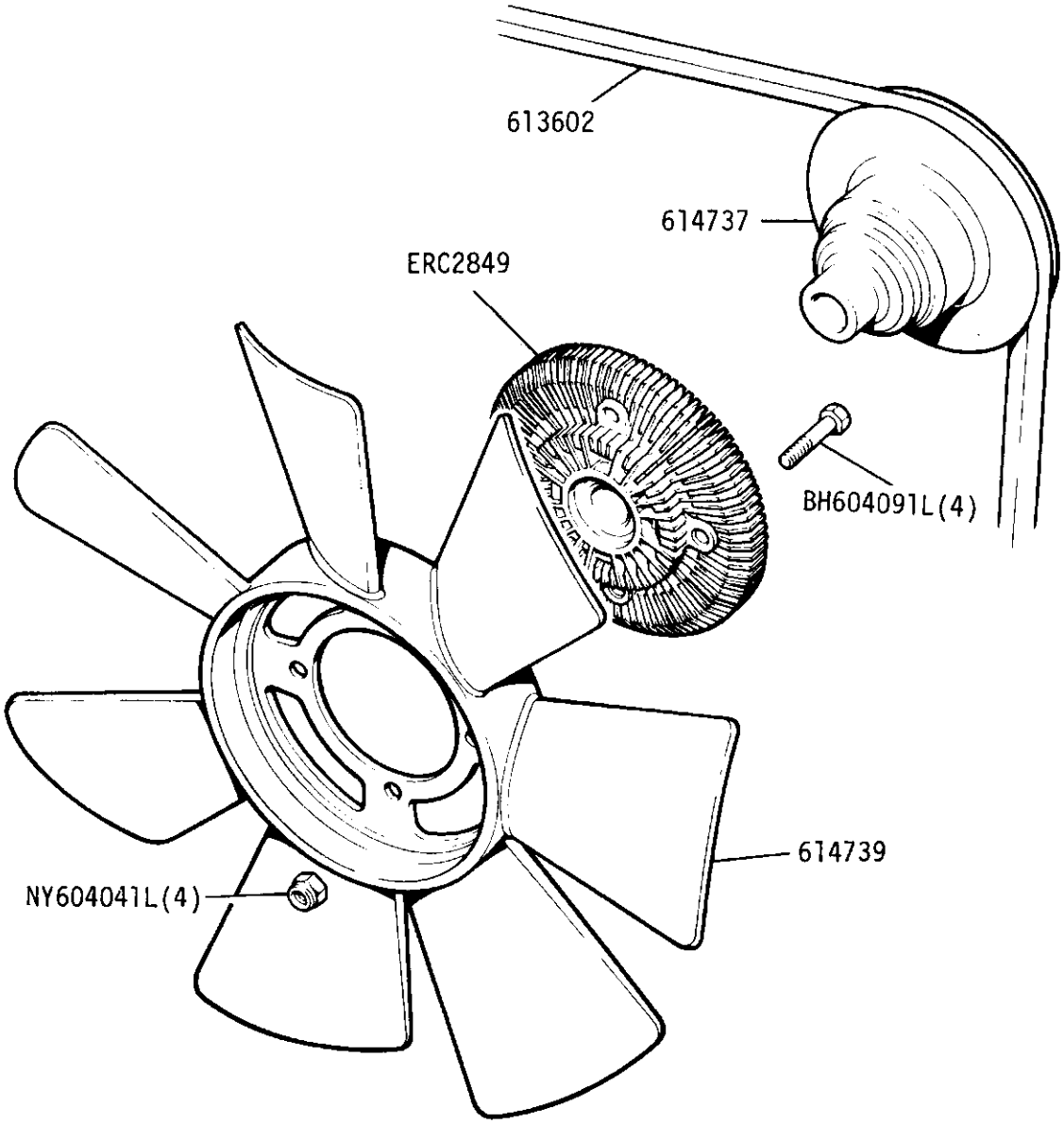
613602
614737
ERC2849
BH604091L(4)
614739
NY604041L(4)

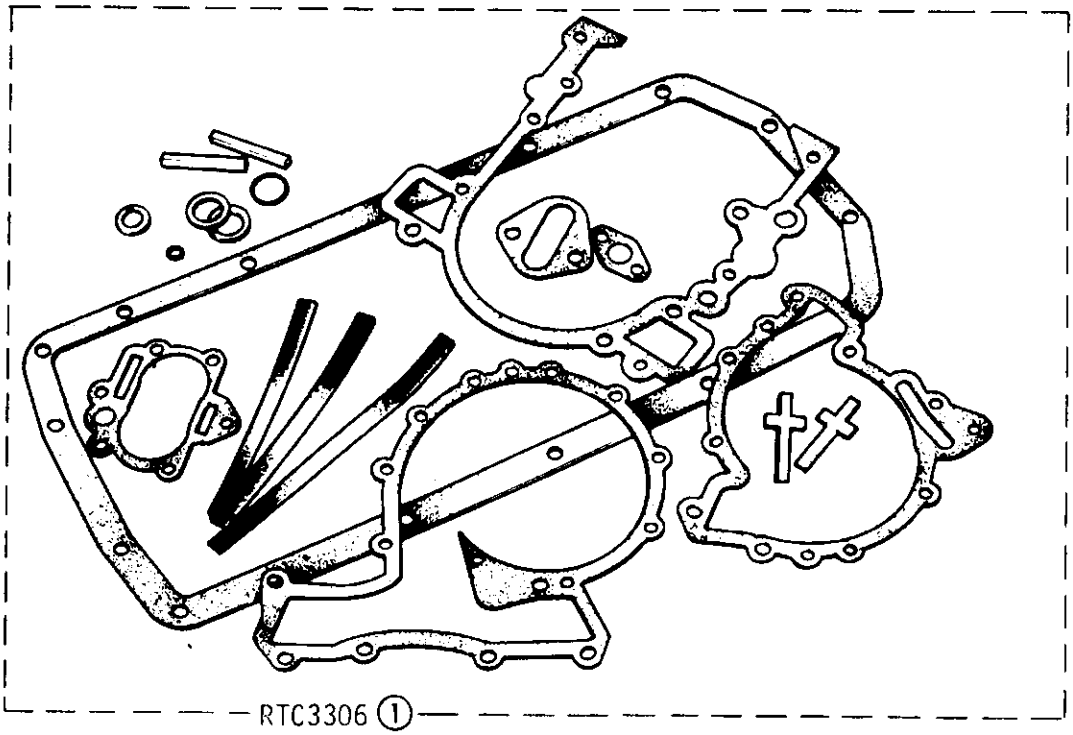

RTC3306 ①

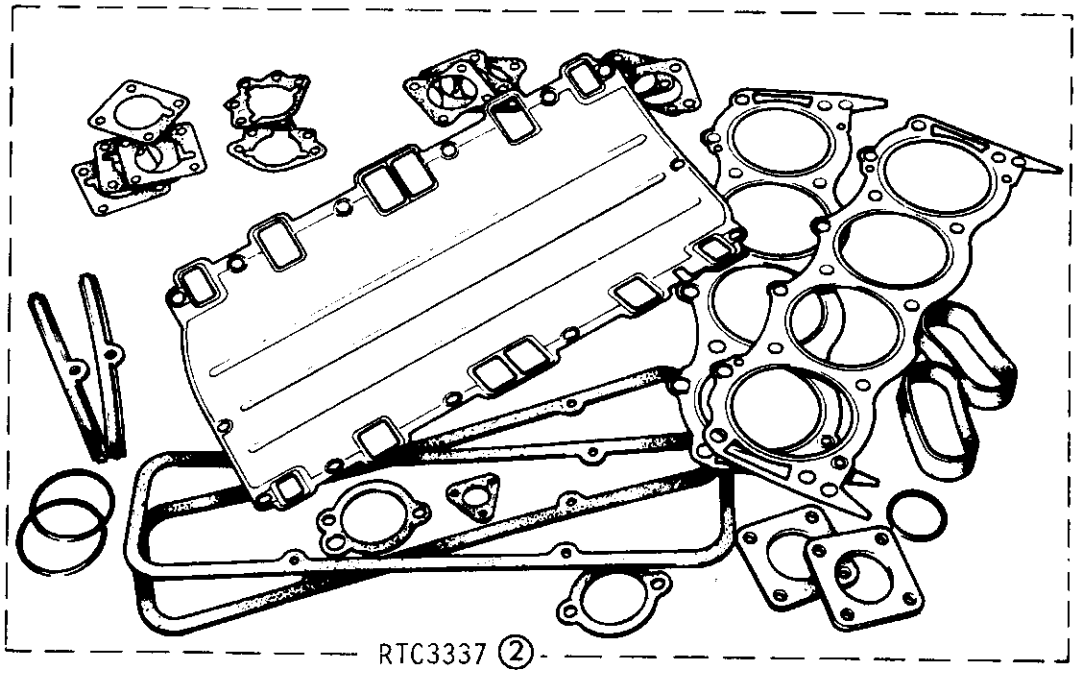

RTC3337 ②

① Gasket kit - Engine overhaul
② Gasket kit - Decarbonising

GROUP C

ENGINE - Flywheel and Clutch 2½ Litre Petrol

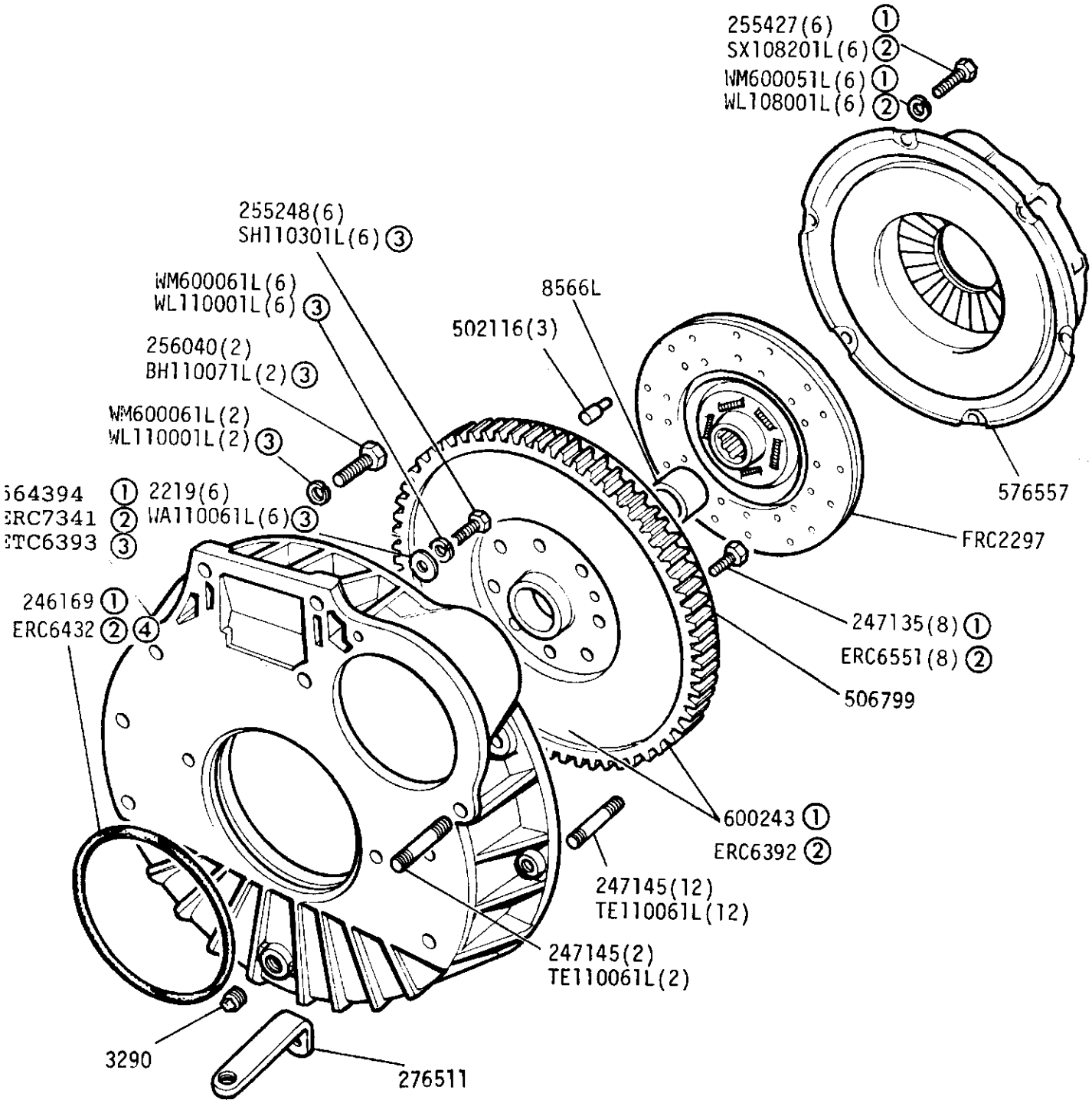

Lining package for clutch 605997 Reinforcing plate for flywheel ERC4658 ②

① 3 Bearing Crankshaft
② 5 Bearing Crankshaft
③ From engine numbers 36123672B, 36407286B
④ Not required after engine number 36142443C or if liquid gasket compound is used.

GROUP C
NGINE - Flywheel and Clutch 2.6 Litre Petrol

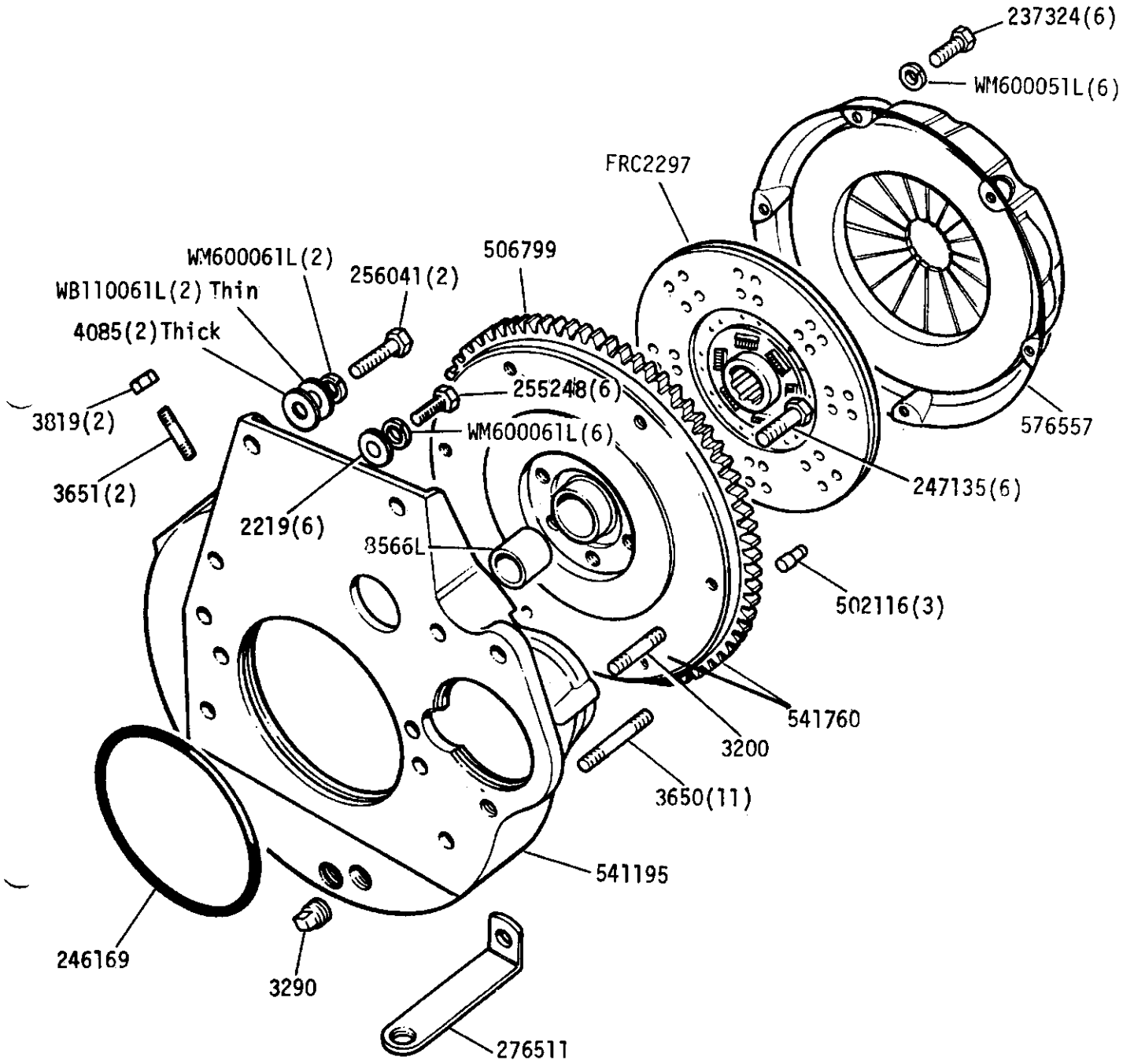

Lining package for clutch plate 605997

GROUP C

ENGINE - Flywheel and Clutch 2¼ Litre Diesel

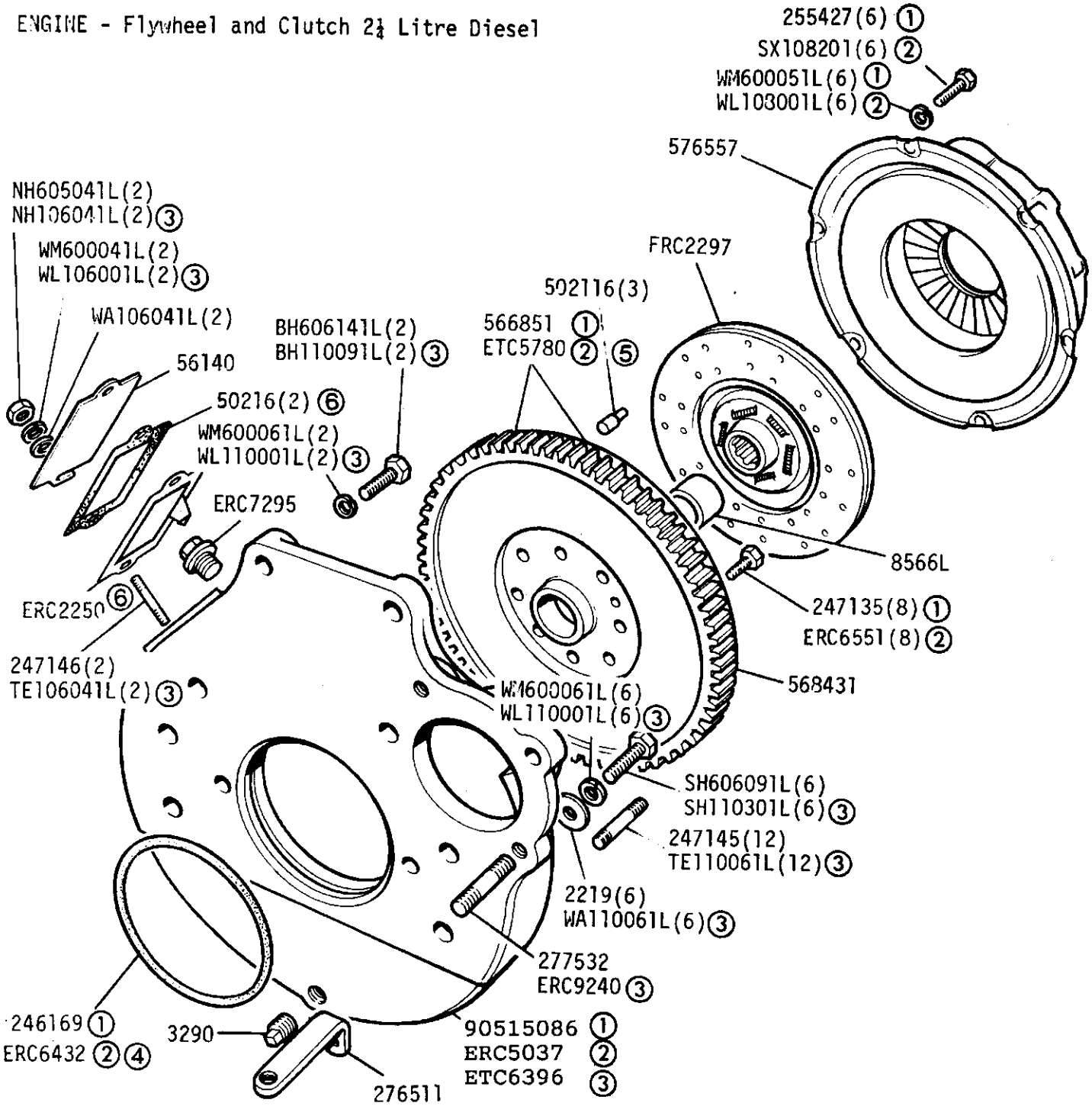

Linkage pack for Clutch 605997

① 3 Bearing Crankshaft-engine prefix 906

② 5 Bearing Crankshaft-engine prefix 366

③ From engine number 36619420B

④ Not required if liquid gasket compound has been used

⑤ Reinforcing plate for flywheel ERC4658

⑥ Timing pointer and one gasket deleted after Nov 82

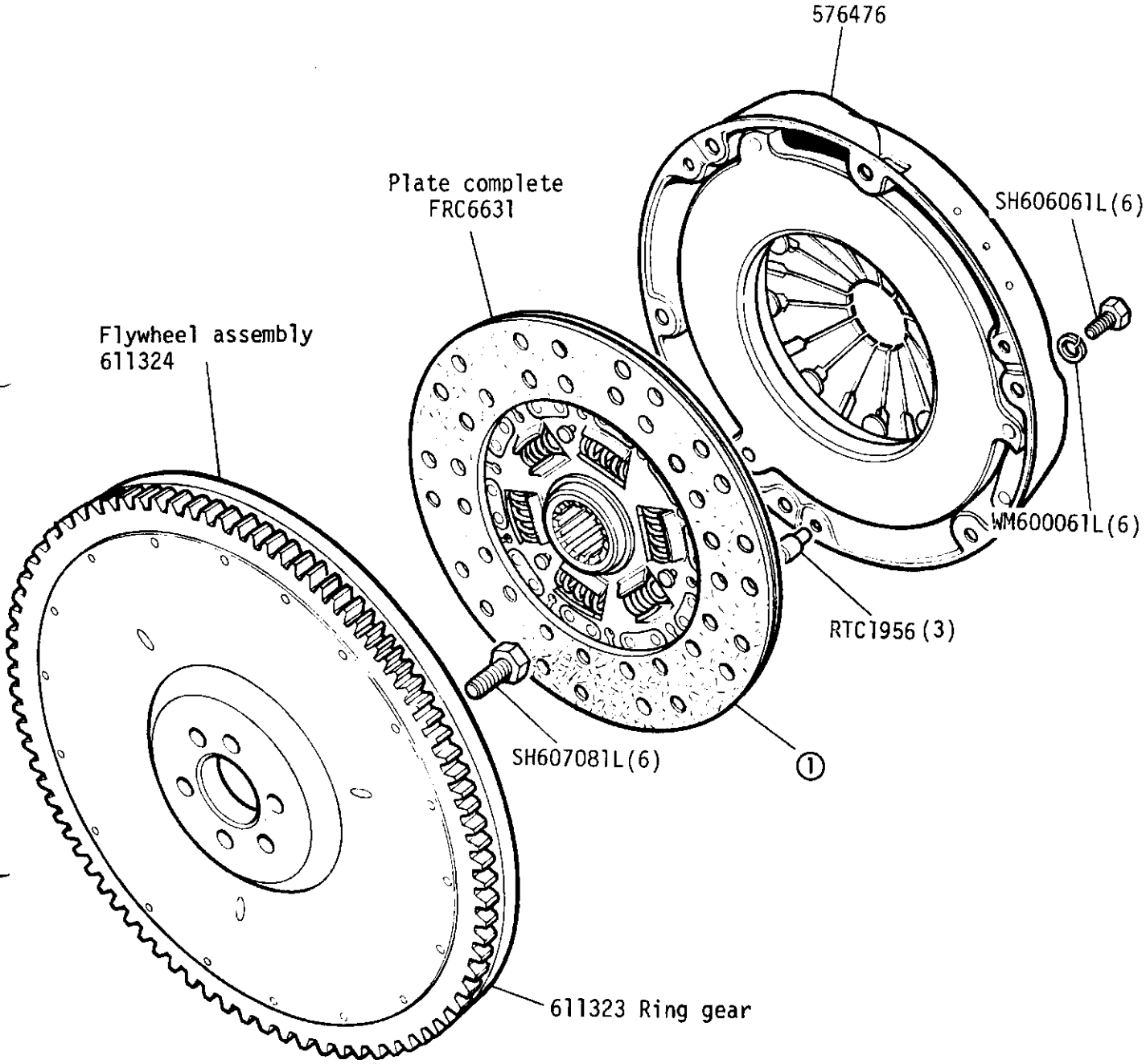

① Lining package for clutch AEU1750

GROUP C

CLUTCH - Pedal and Bracket

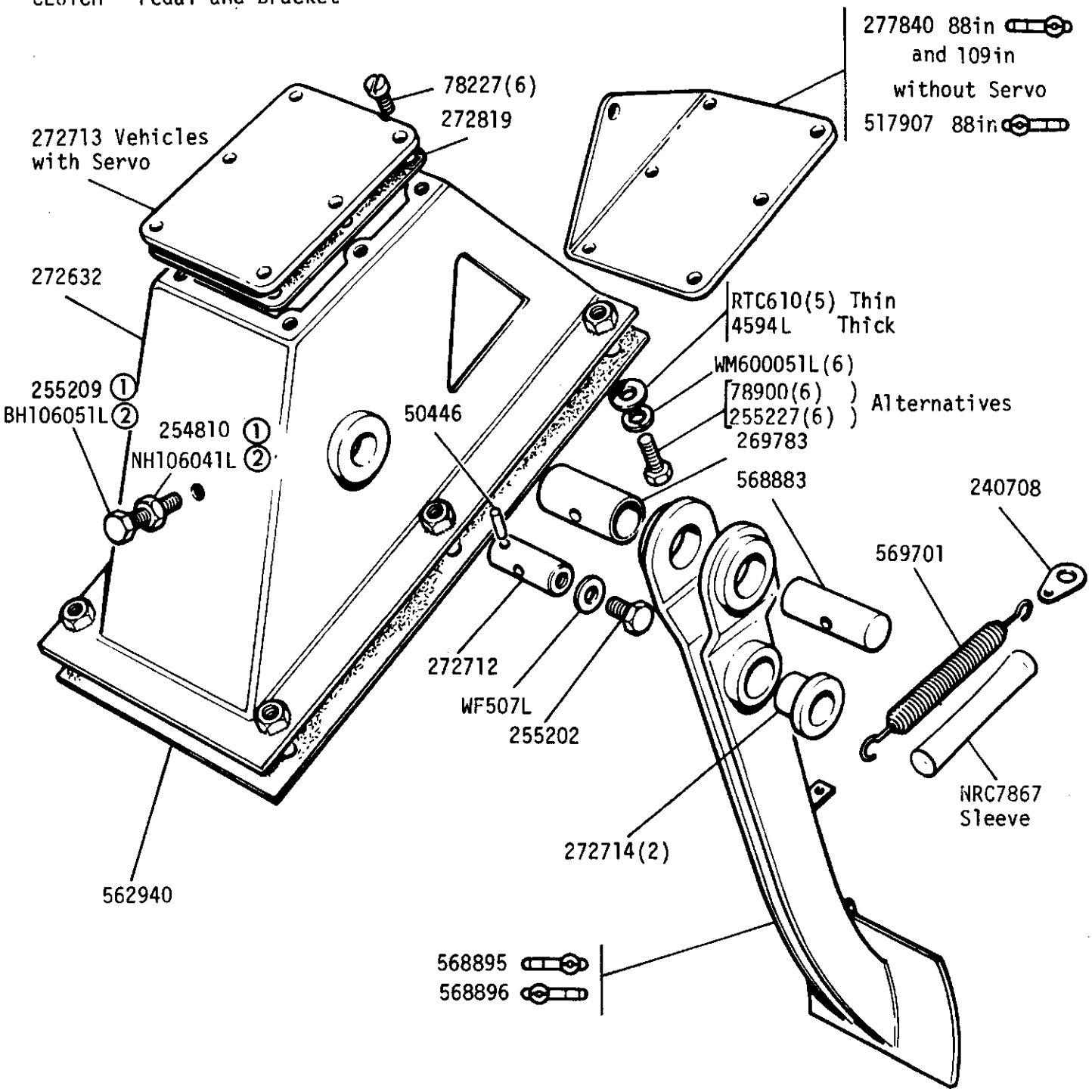

Clutch pedal and bracket assembly 568893

Clutch pedal and bracket assembly 568894

① UNF

② METRIC

GROUP C
CLUTCH - Master Cylinder and Pipes

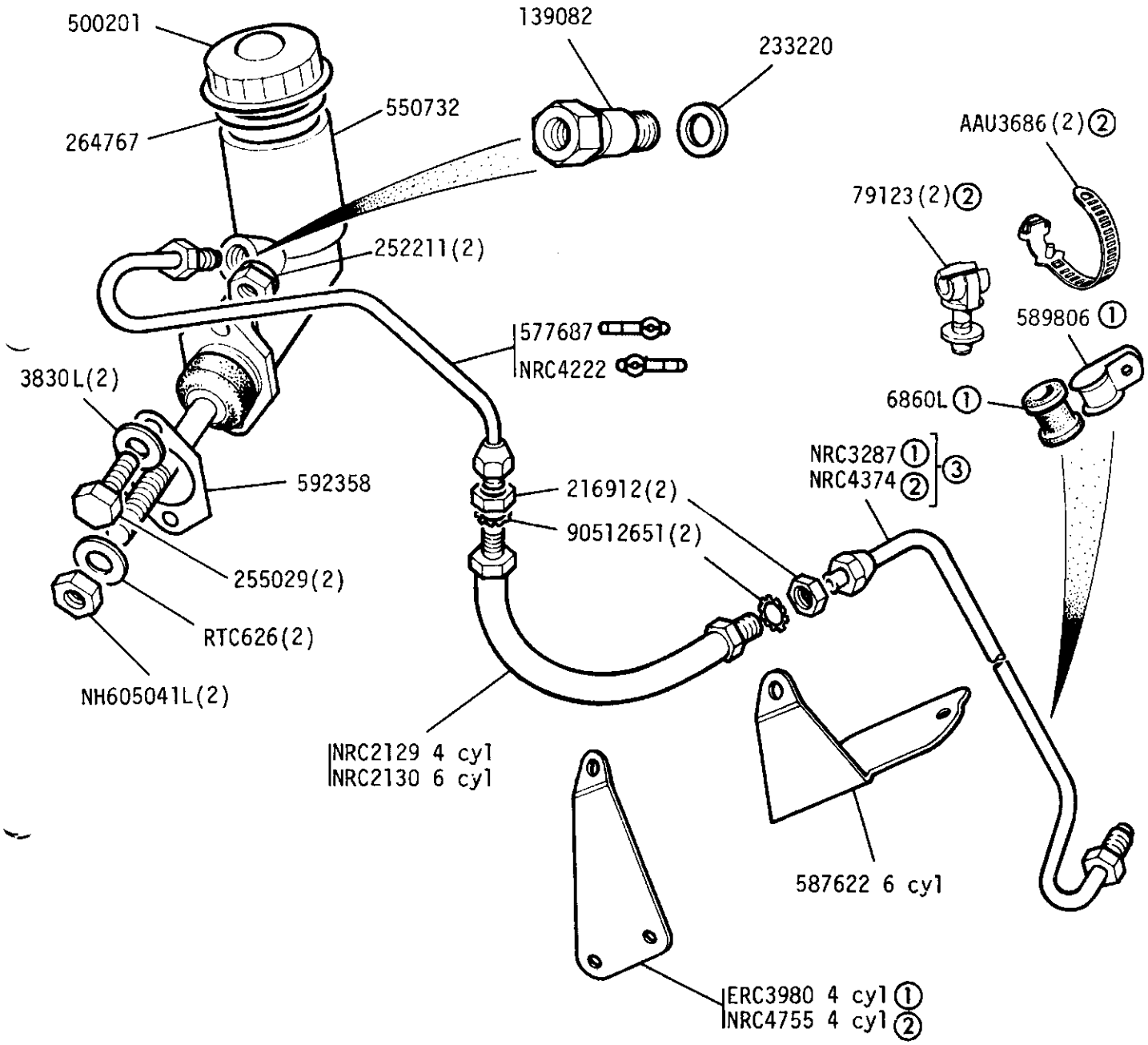

Clutch master cylinder overhaul kit 8G8837L

① Required when NRC3287 is fitted

② Required when NRC4374 is fitted

③ Alternatives - Check before ordering

LR IRE263/A

GROUP C

CLUTCH - Clutch Release Mechanism Except 109 V8

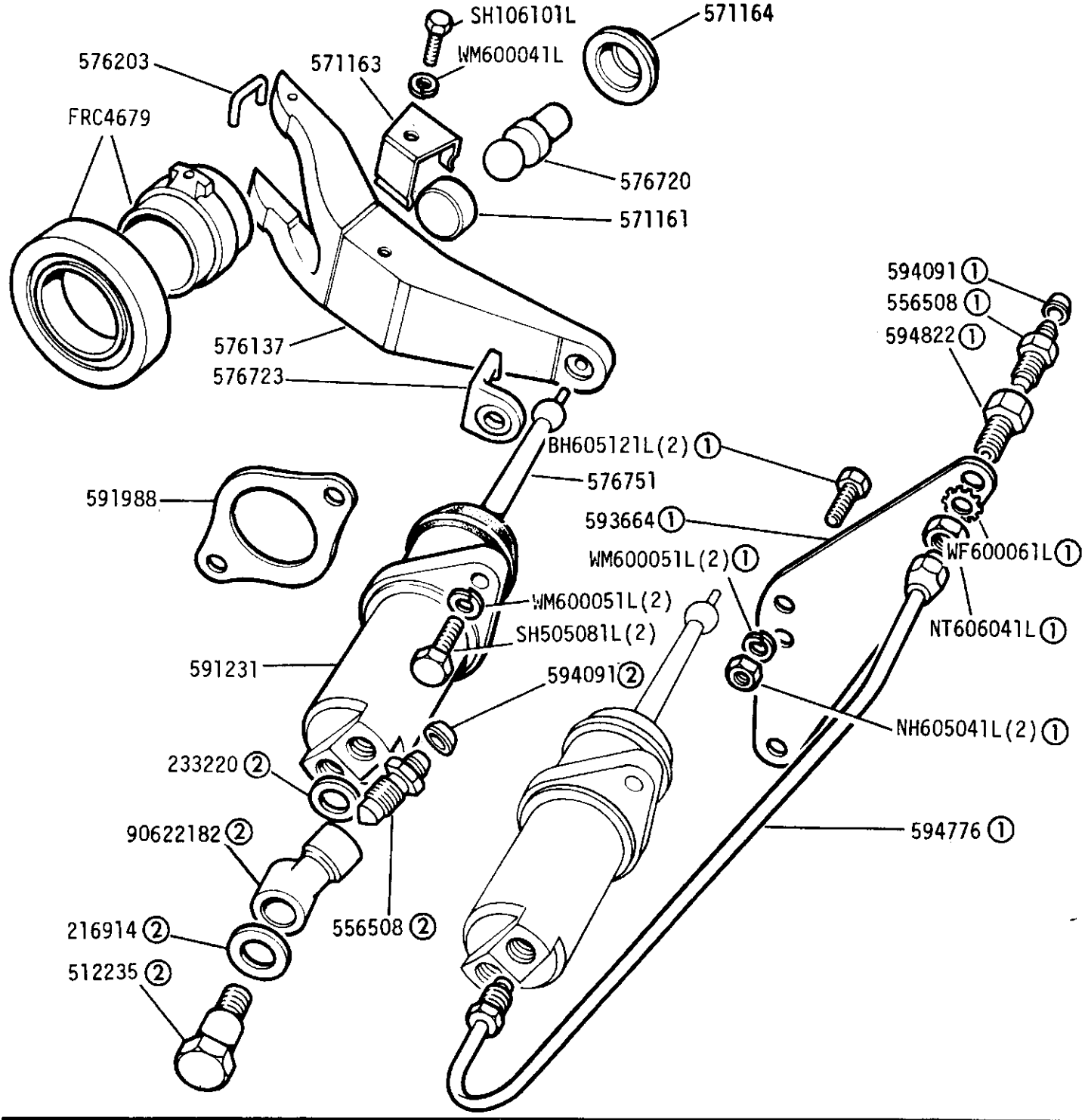

Clutch slave cylinder overhaul kit 8G8600

① Engine suffix 'A'

② From Engine suffix 'B' onwards

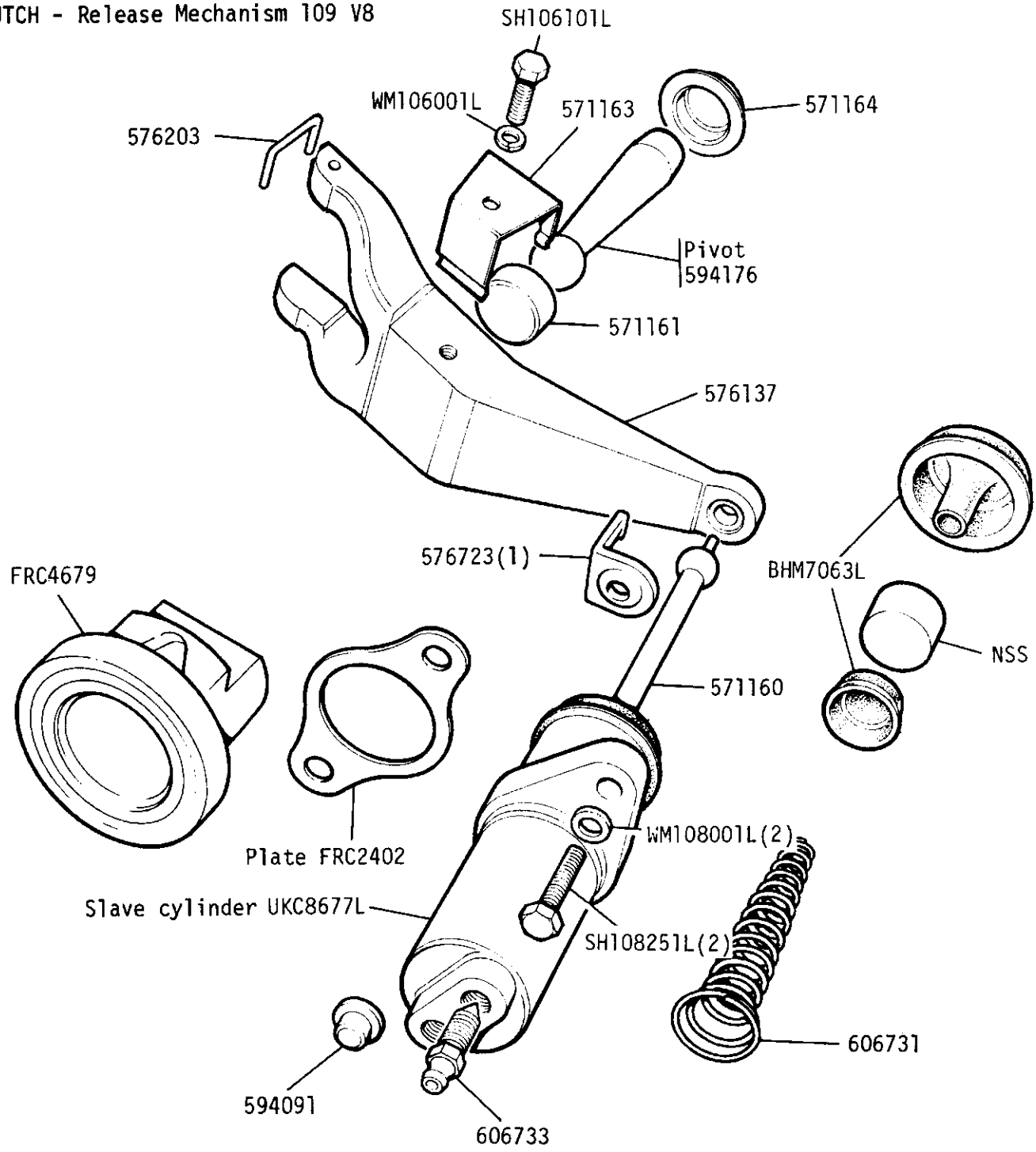

NRC3947 CLUTCH PIPE, HOSE TO SLAVE CYLINDER

GROUP D
GEARBOX ASSEMBLY Except 109 V8

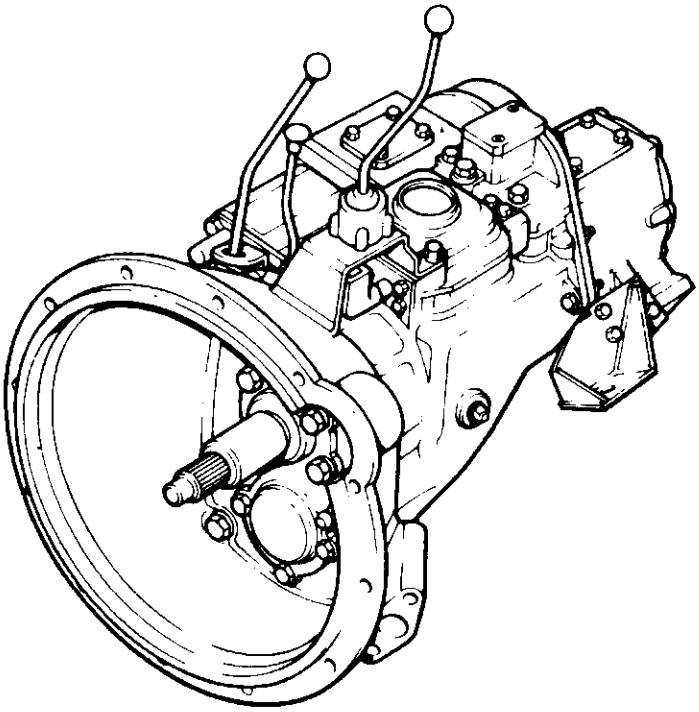

Gearbox Assemblies. New.
2¼ Litre Petrol and Diesel Except 1 Ton RTC2705N
2.6 Litre Petrol Except 1 Ton FRC 2001N
109 2¼ Litre Petrol 1 Ton FRC 2003N. Optional on all other models.
109 2.6 Litre Petrol 1 Ton FRC 2002N. Optional on all other models.

Gearbox Assemblies. Rebuilt.
2¼ Litre Petrol and Diesel Except 1 Ton Gearbox suffix 'A' 576730R
2¼ Litre Petrol and Diesel Except 1 Ton Gearbox suffix 'B' to 'C' FRC 2000R
2.6 Litre Petrol Except 1 Ton Gearbox suffix 'A' 576761R | 'D' onwards RTC2705R
2.6 Litre Petrol Except 1 Ton Gearbox suffix 'B' onwards FRC 2001R

Gearbox assembly less Transfer box for 2¼ petrol and diesel RTC1945

Gearbox Gasket Kit 600603

GROUP D
GEARBOX - Bell Housing Except 109 V8

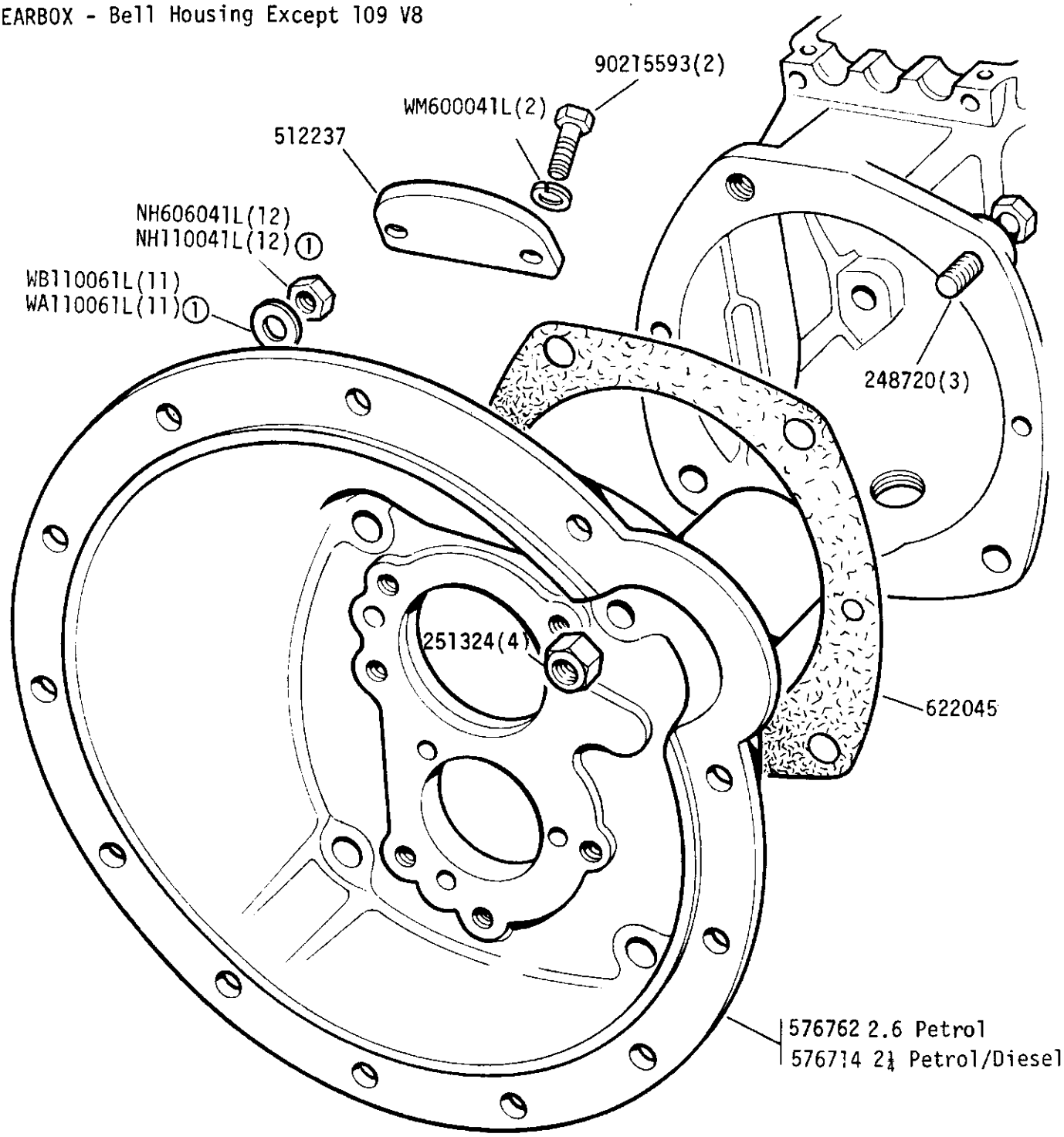

① From engine numbers 36123672B, 36407386B and 36619420B

GROUP D
GEARBOX - Front Cover Except 109 V8

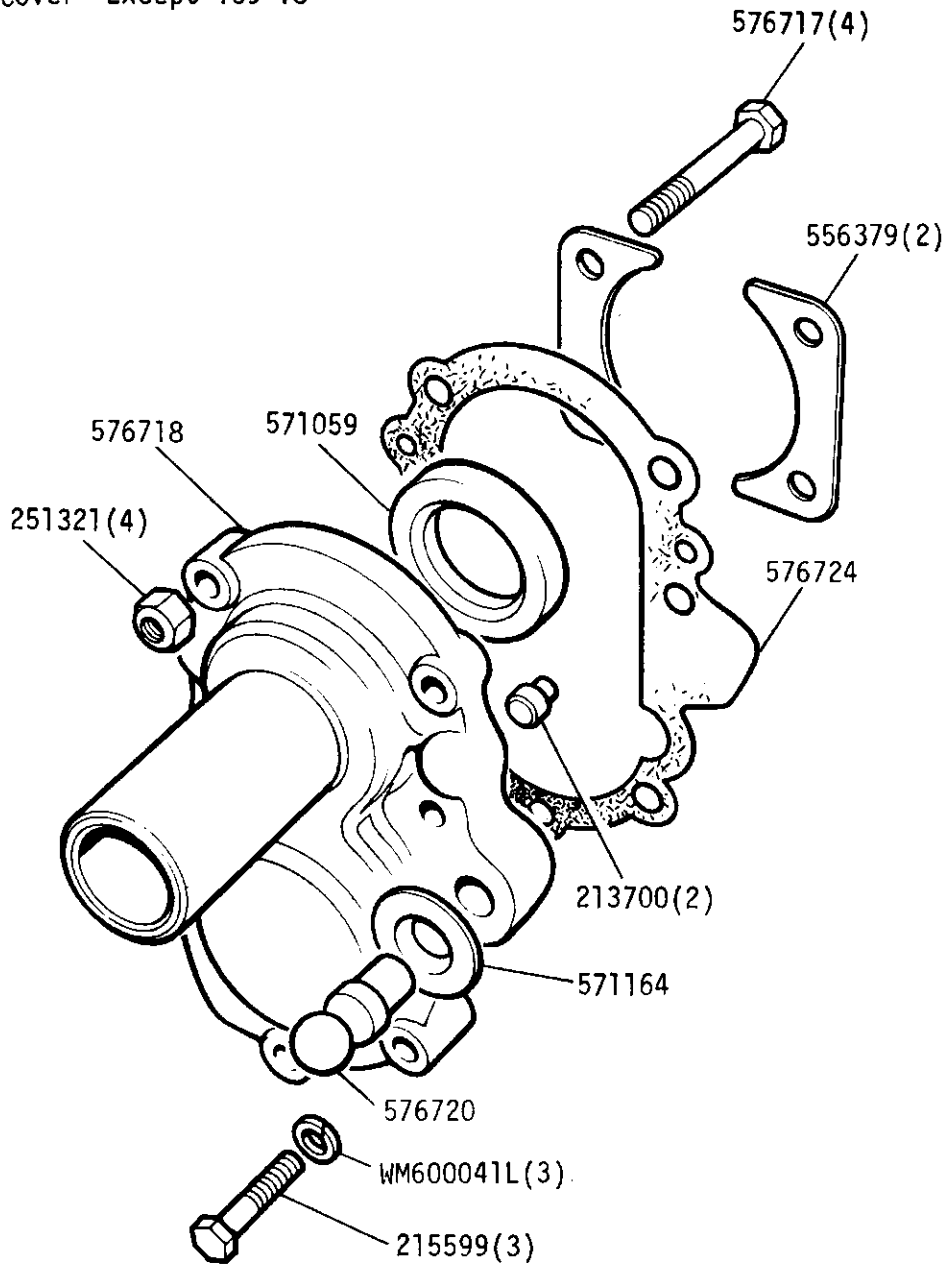

GROUP D
GEARBOX - Main casing - Except 109 V8

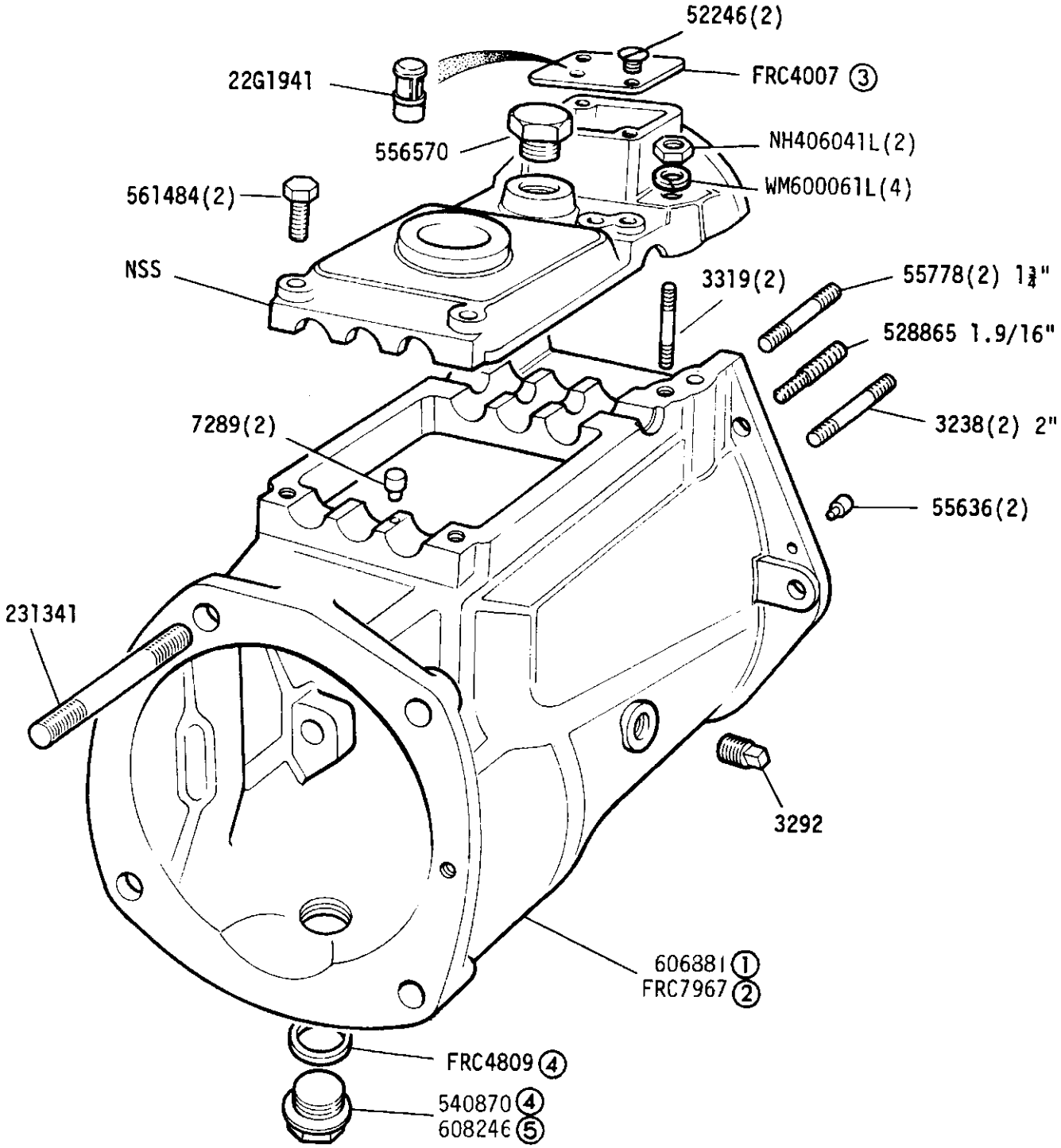

① Gearbox suffix A
② Gearbox suffix B onwards
③ Also use FRC3776 Joint Washer
④ Up to gearbox number 36133482D, 90121577D
⑤ From gearbox number 36133483D, 90121578D

GROUP D
GEARBOX - Primary pinion and mainshaft,front Except 109 V8

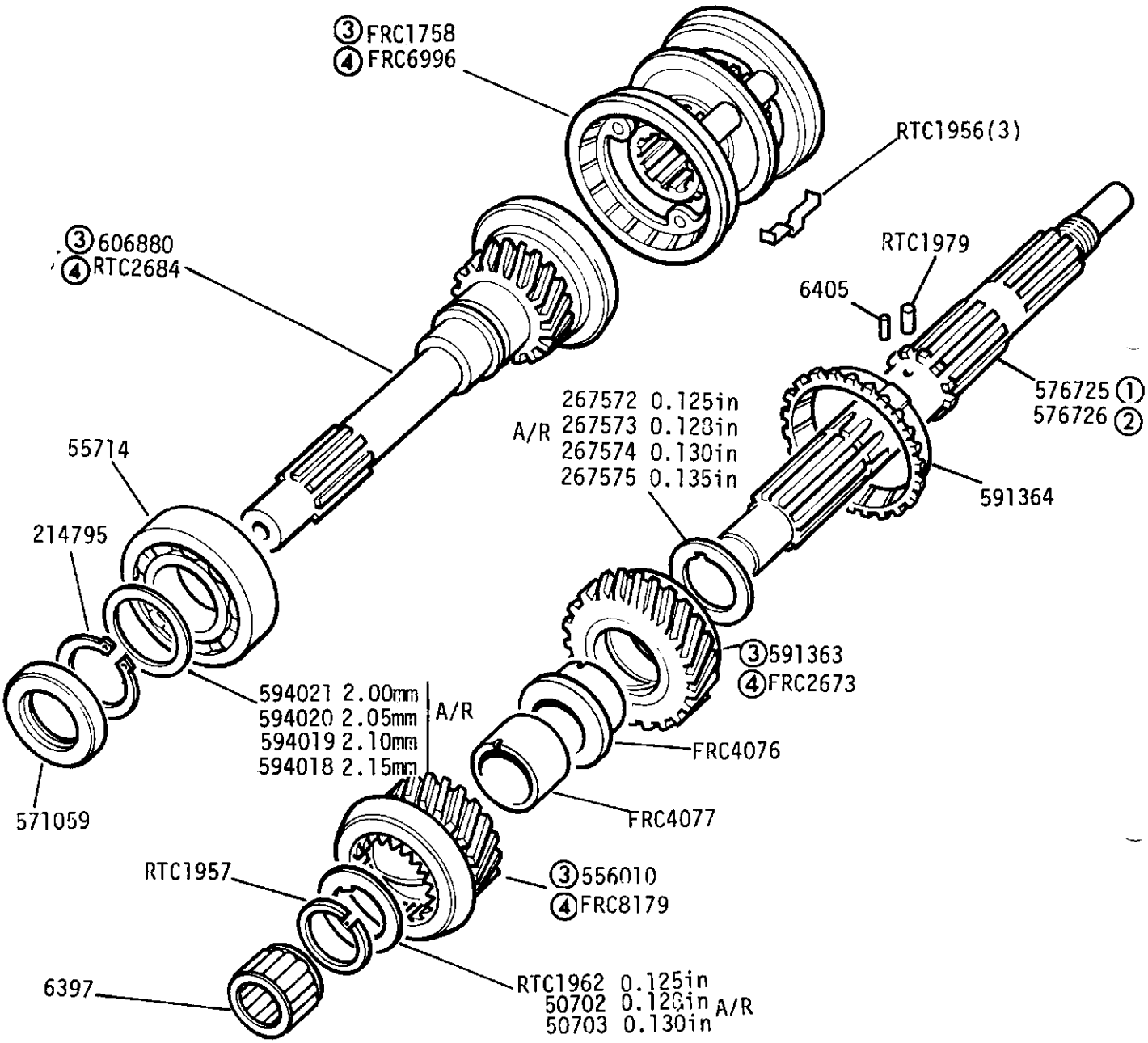

① Except 1 ton
② 109 1 ton Optional on all other models
③ Up to gearbox Suffix 'C' inclusive
④ From gearbox Suffix 'D' onwards

GROUP D

GEARBOX - Mainshaft, Rear Except 109 V8

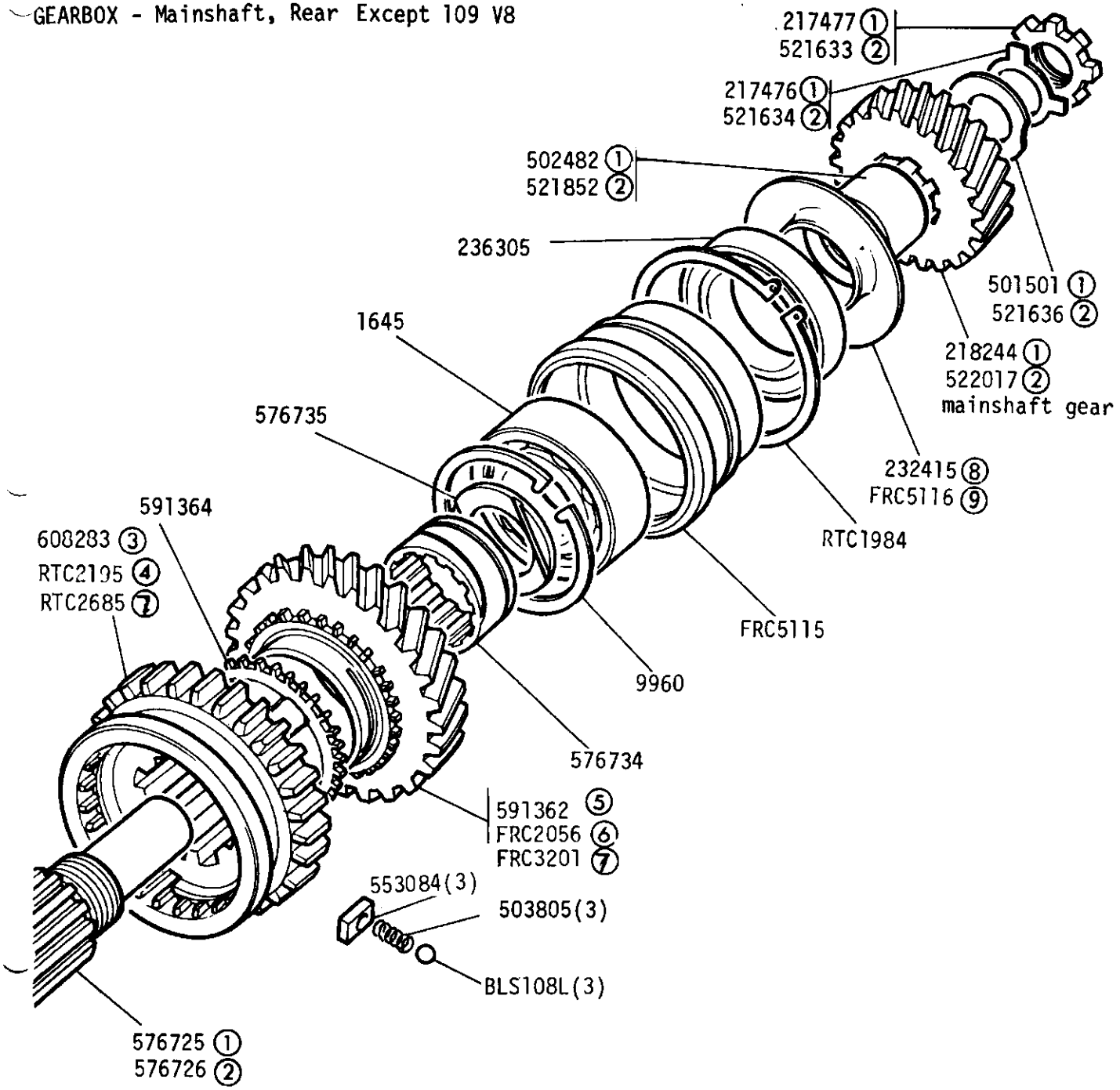

① Except 1 Ton
② 109 1 Ton, Optional on all other models
③ Gearbox suffix 'A'
④ Gearbox suffix B and C inclusive
⑤ Gearbox Suffix "A" and "B" inclusive
⑥ Gearbox Suffix 'C' only
⑦ From Gearbox Suffix "D" onwards
⑧ Use with Transfer Case 539787
⑨ Use with Transfer Case FRC5567

GROUP D

GEARBOX - Layshaft Gears and Reverse - Gearbox Suffix 'A' Except 109 V8

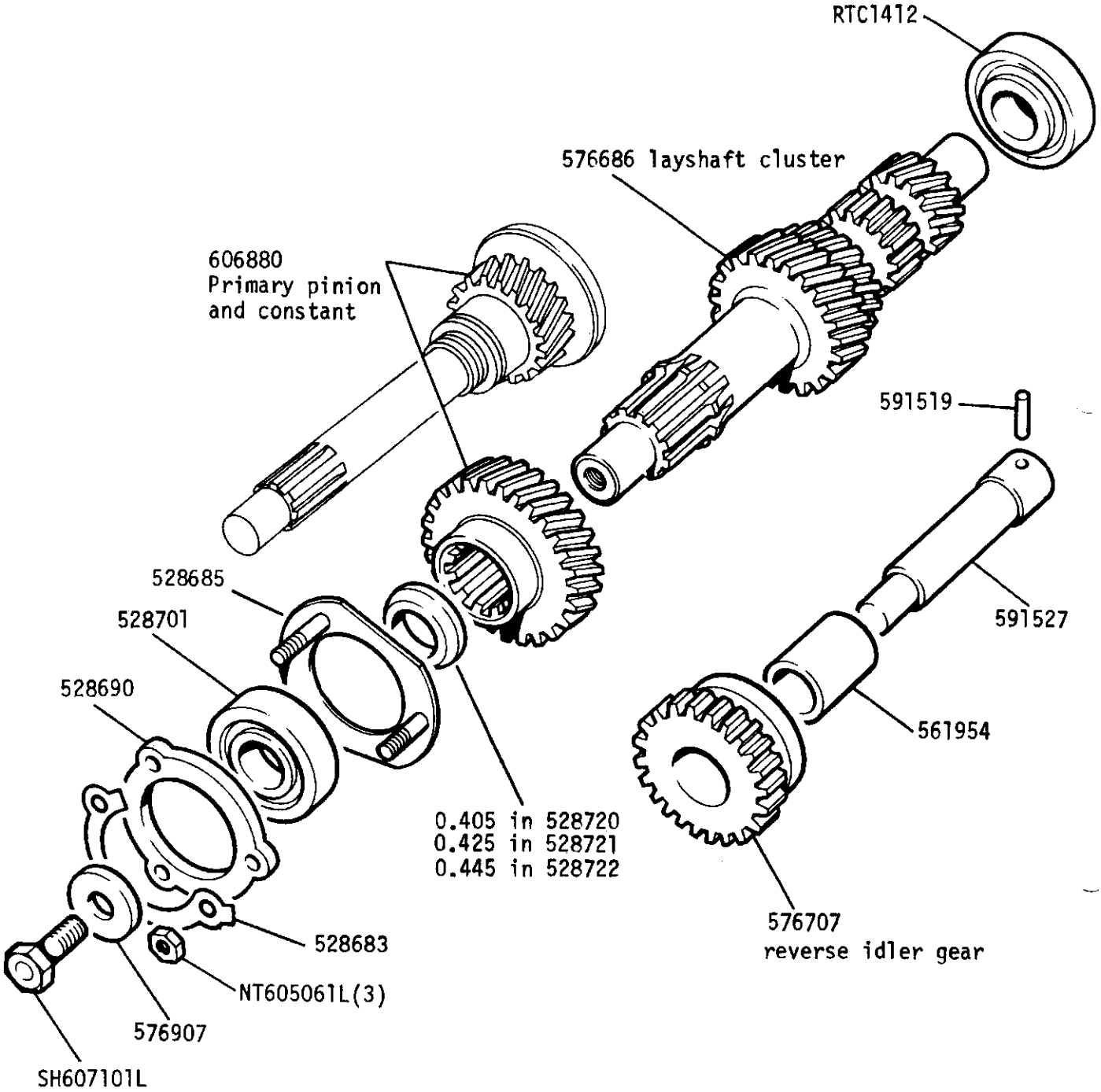

GROUP D

GEARBOX - Layshaft Gears and Reverse from Gearbox Suffix 'B' onwards

Except 109 V8

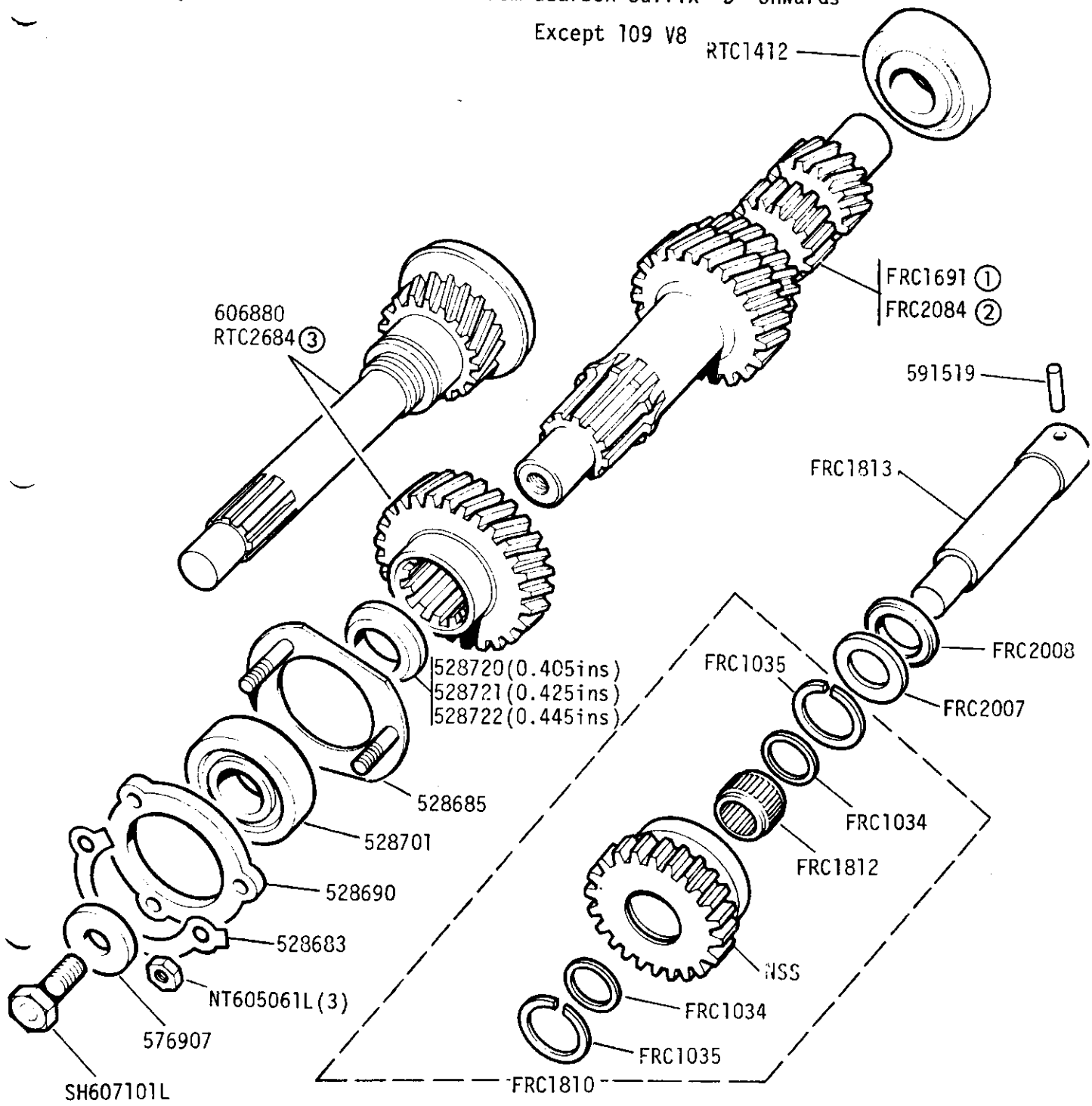

① Gearbox Suffix 'B'
② From Gearbox Suffix 'C' onwards
③ From gearbox suffix 'D' onwards.

GEARBOX - Reverse gear modification kit Except 109 V8

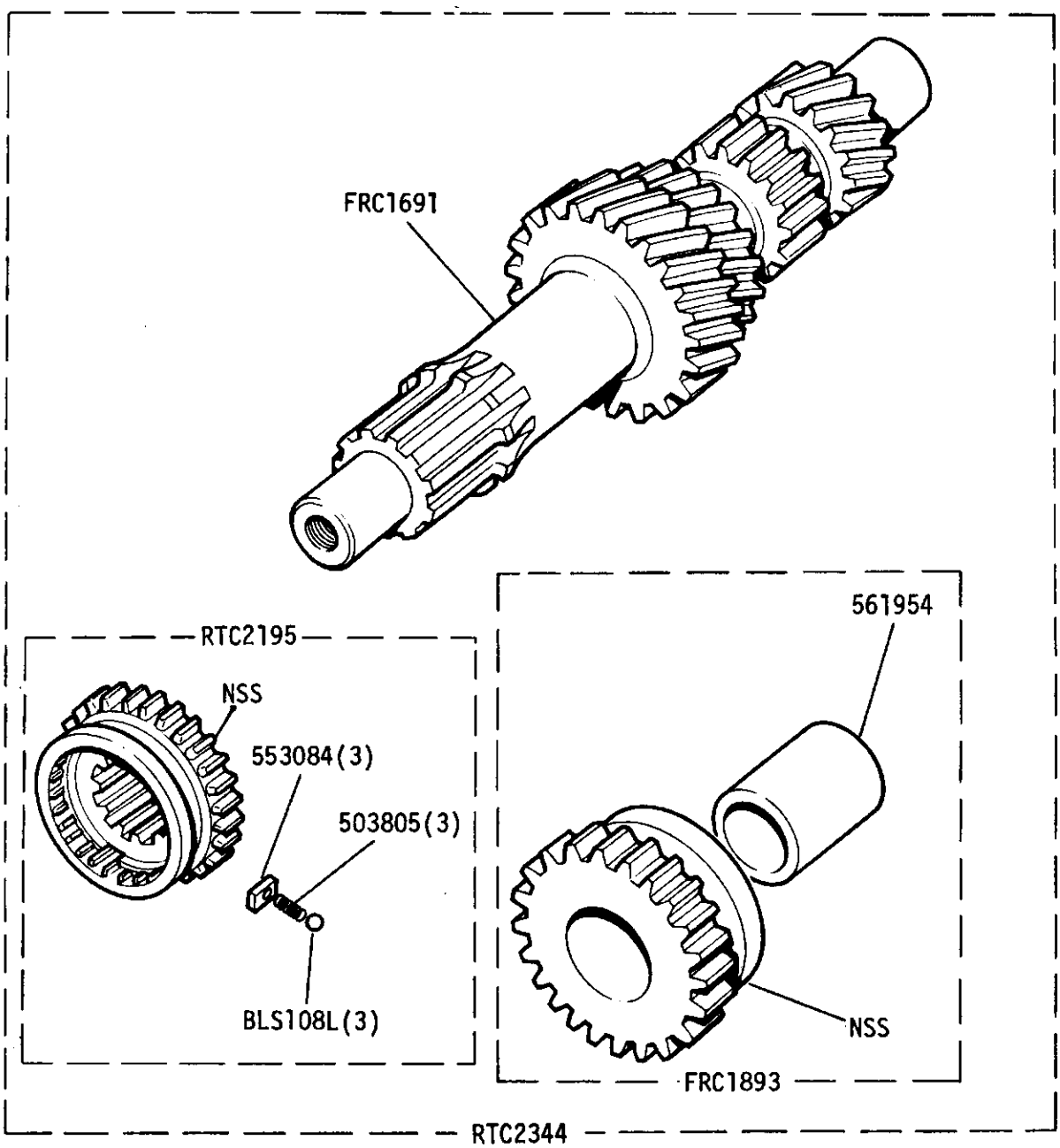

Reverse gear modification kit RTC2344 for use in gear boxes numbered up to suffix 'A'

GROUP D
GEARBOX - Intermediate and High Gear Wheel - Except 1 Ton Models and 109 V8

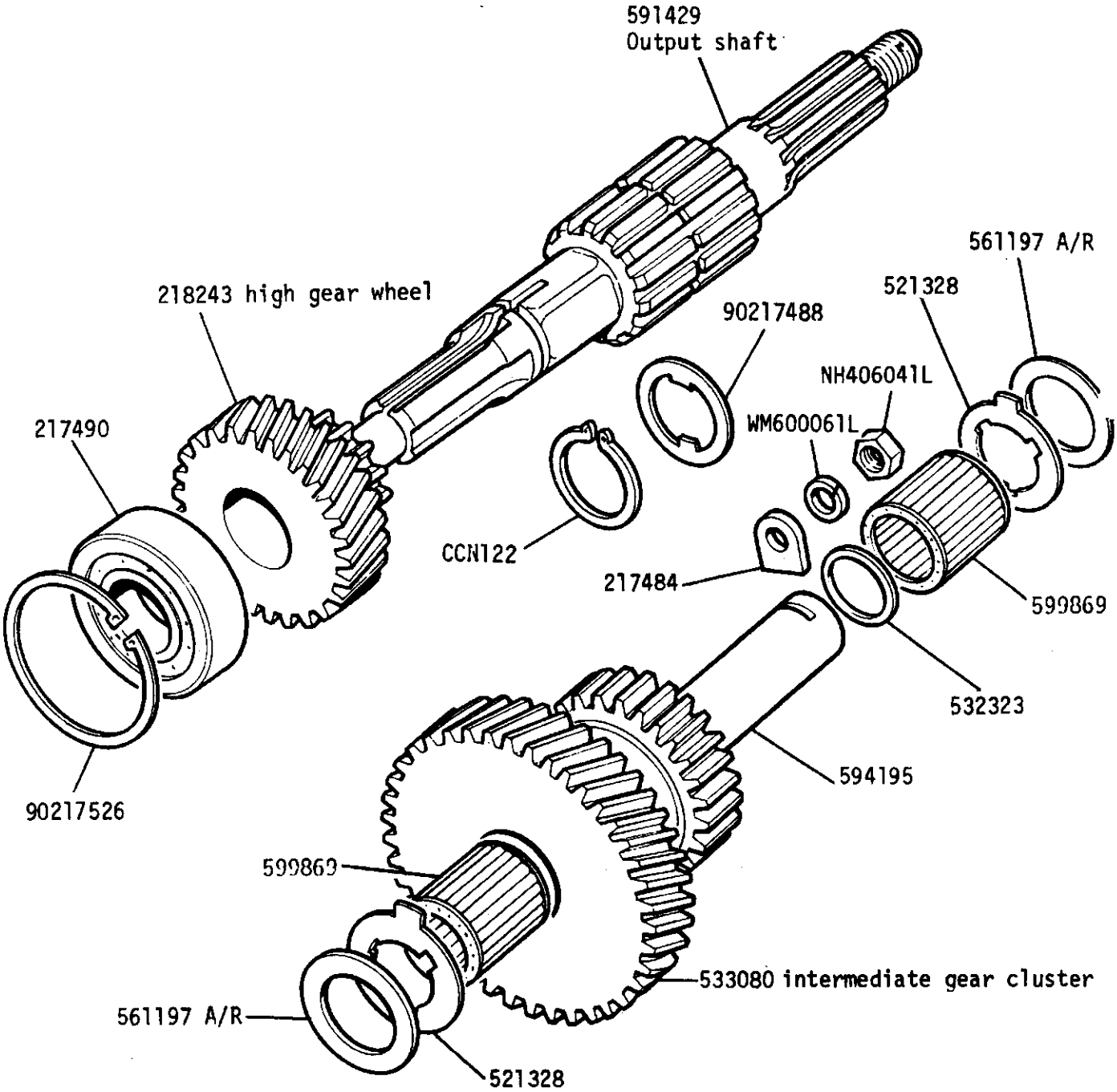

GROUP D

ARBOX, Intermediate, high and low gear wheels 1 Ton models

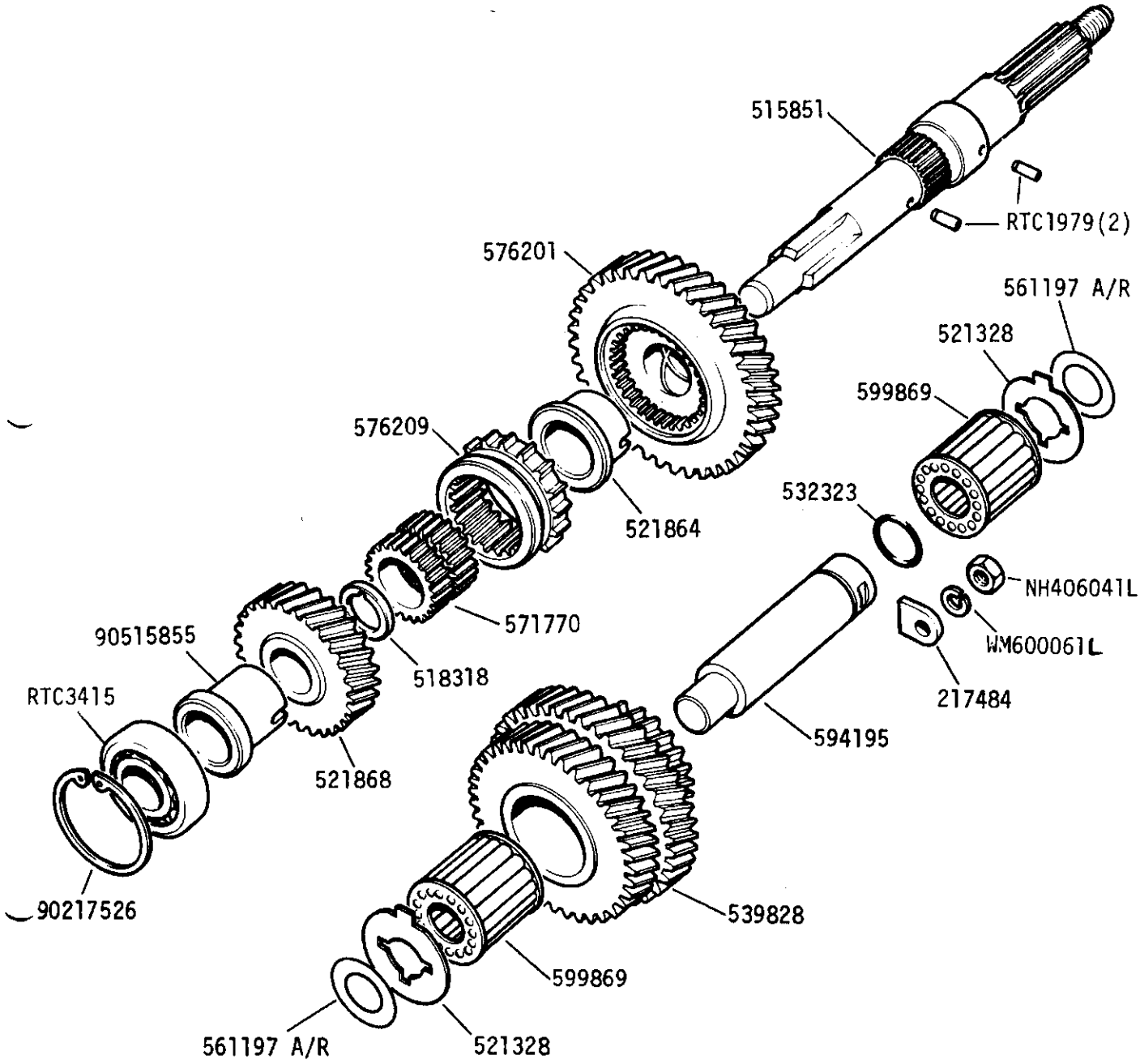

GROUP D

GEARBOX - Low Gear Wheel and Speedometer Drive - Except 1 Ton Models and 109 V8

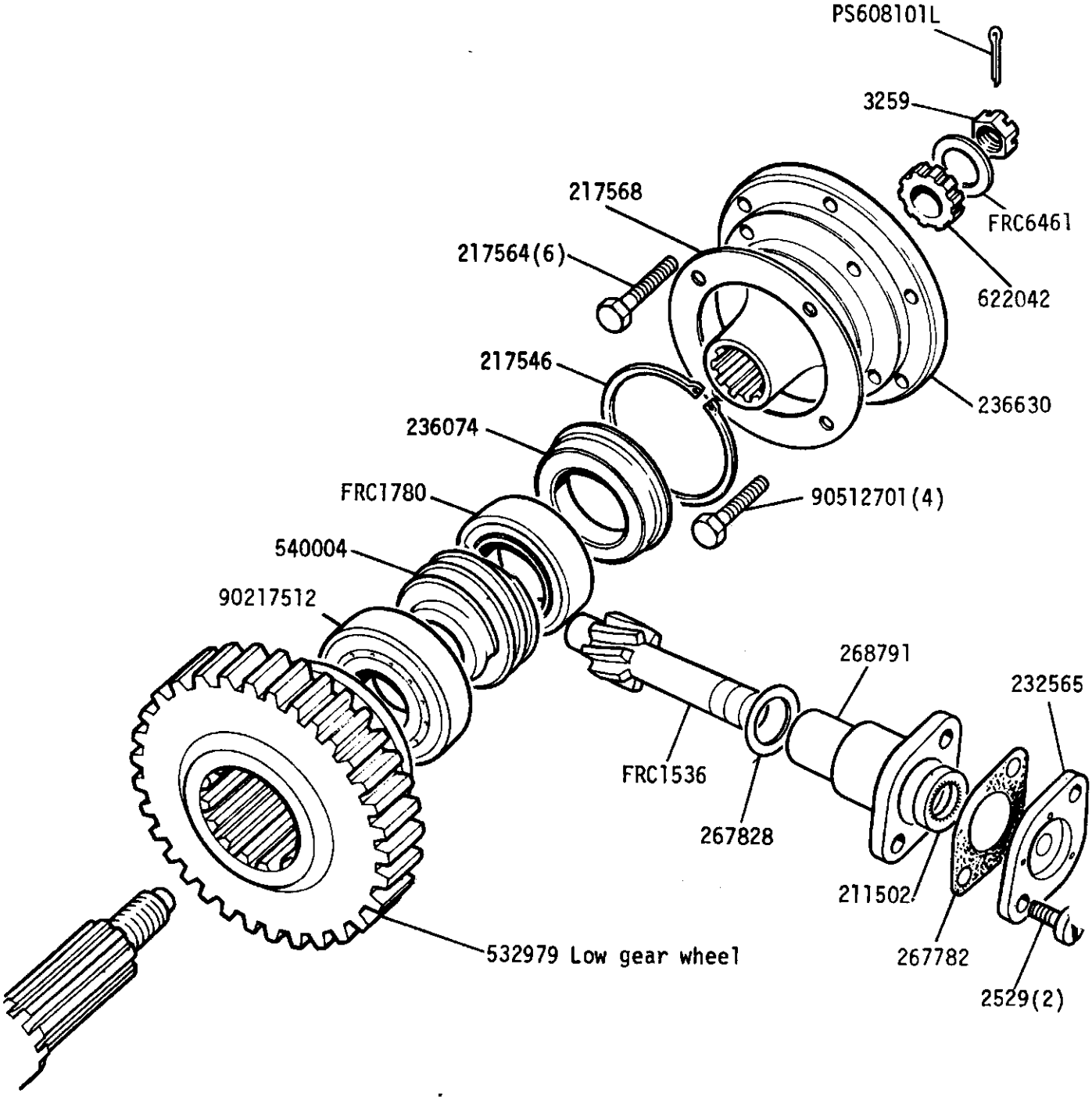

GROUP D

GEARBOX - Speedometer drive 1 Ton models

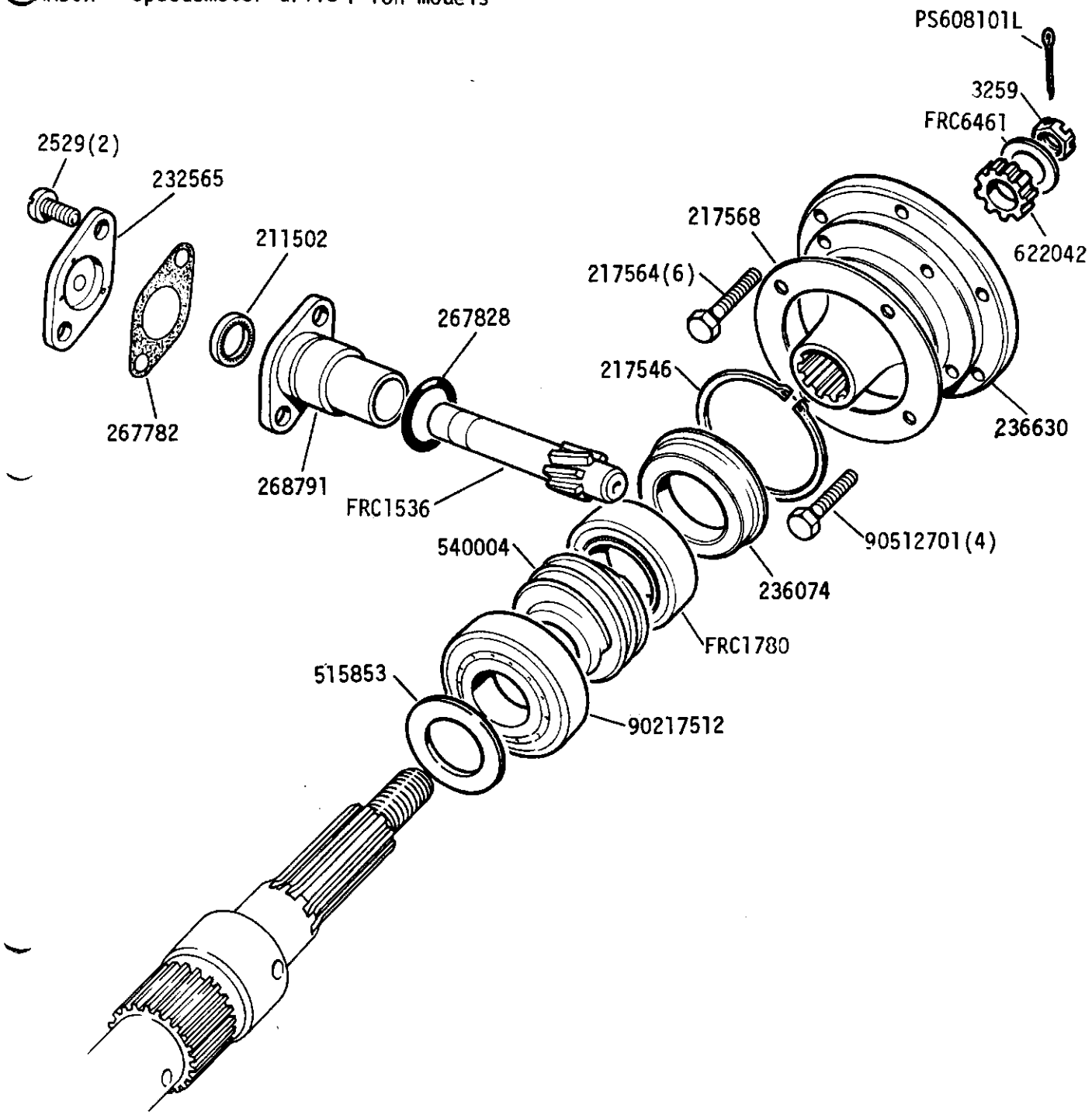

GROUP D
GEARBOX - Transfer Casing Except 109 V8

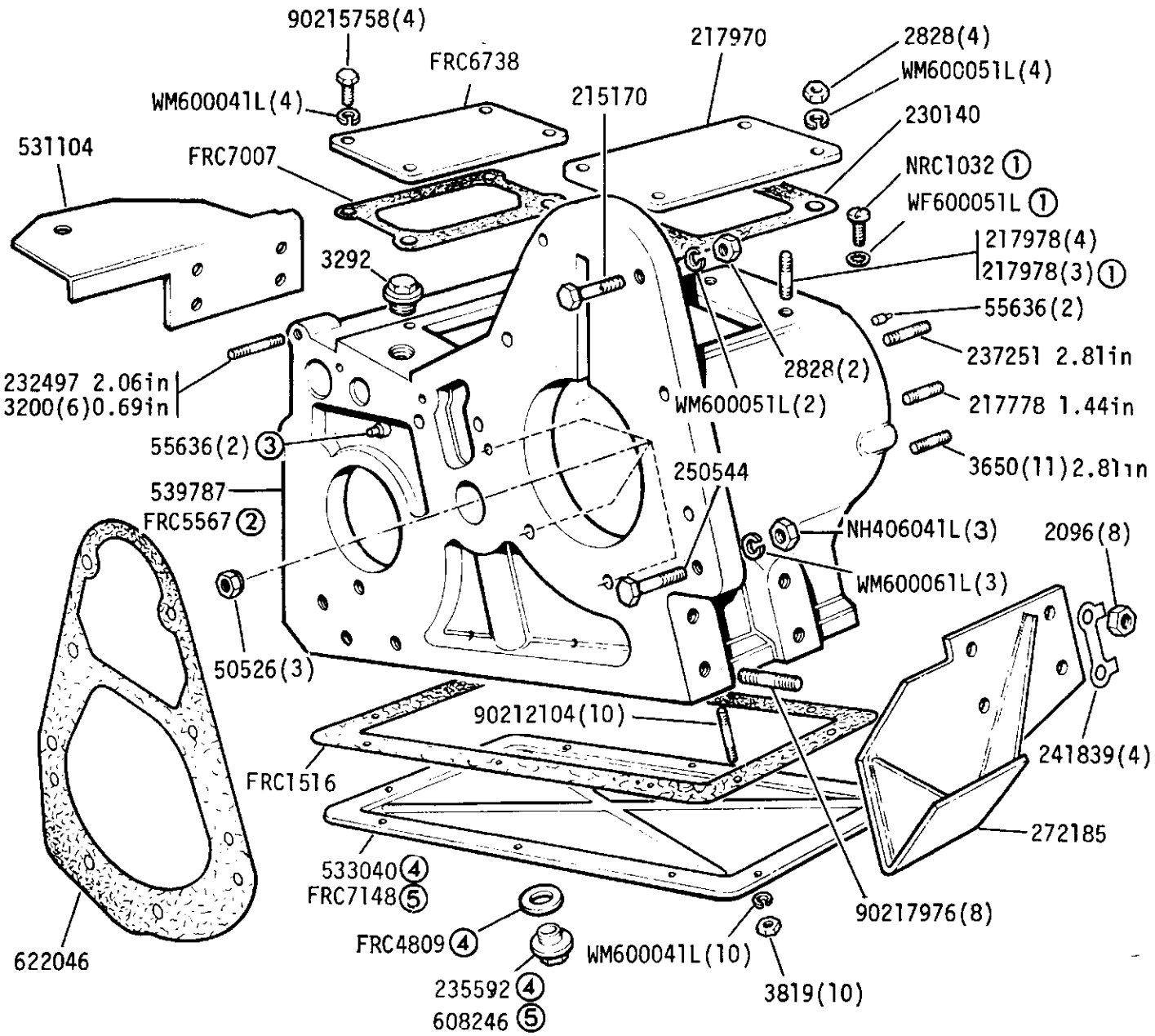

① Required when Centre and Rear Power Take Off is fitted
② From gearbox number 36117572D
③ Use one only with Transfer case FRC5567
④ Up to gearbox numbers 36133482D,90121577D
⑤ From gearbox numbers 36133483D,90121578D

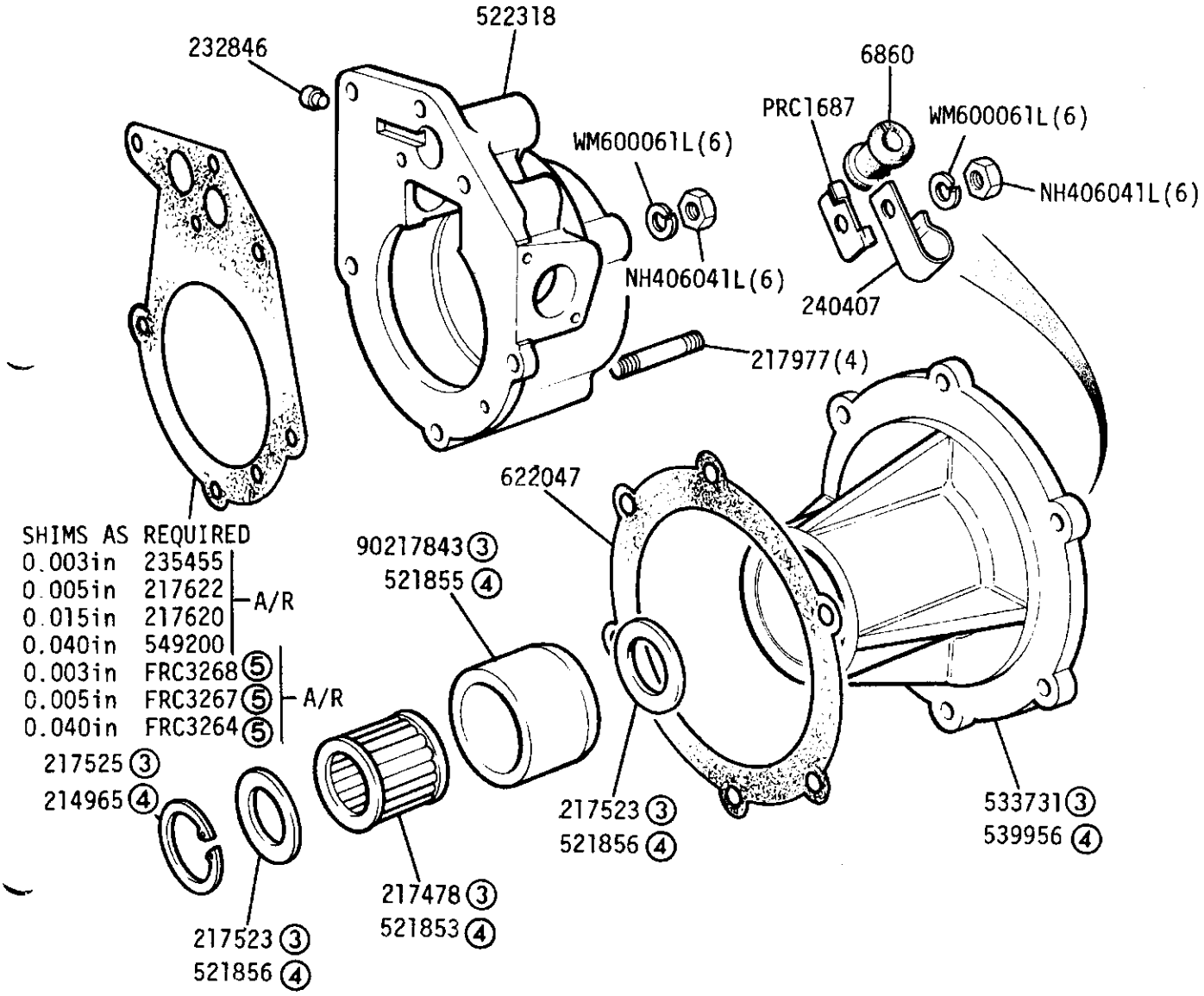

① Rear Mainshaft Bearing Housing Assembly 230696 ③
② Rear Mainshaft Bearing Housing Assembly 521857 ④
③ Except 1 Ton
④ 109 1 Ton, Optional on all Other Models
⑤ Gearbox prefix 991 only

GEARBOX - Front Output Shaft Housing Except 109 V8

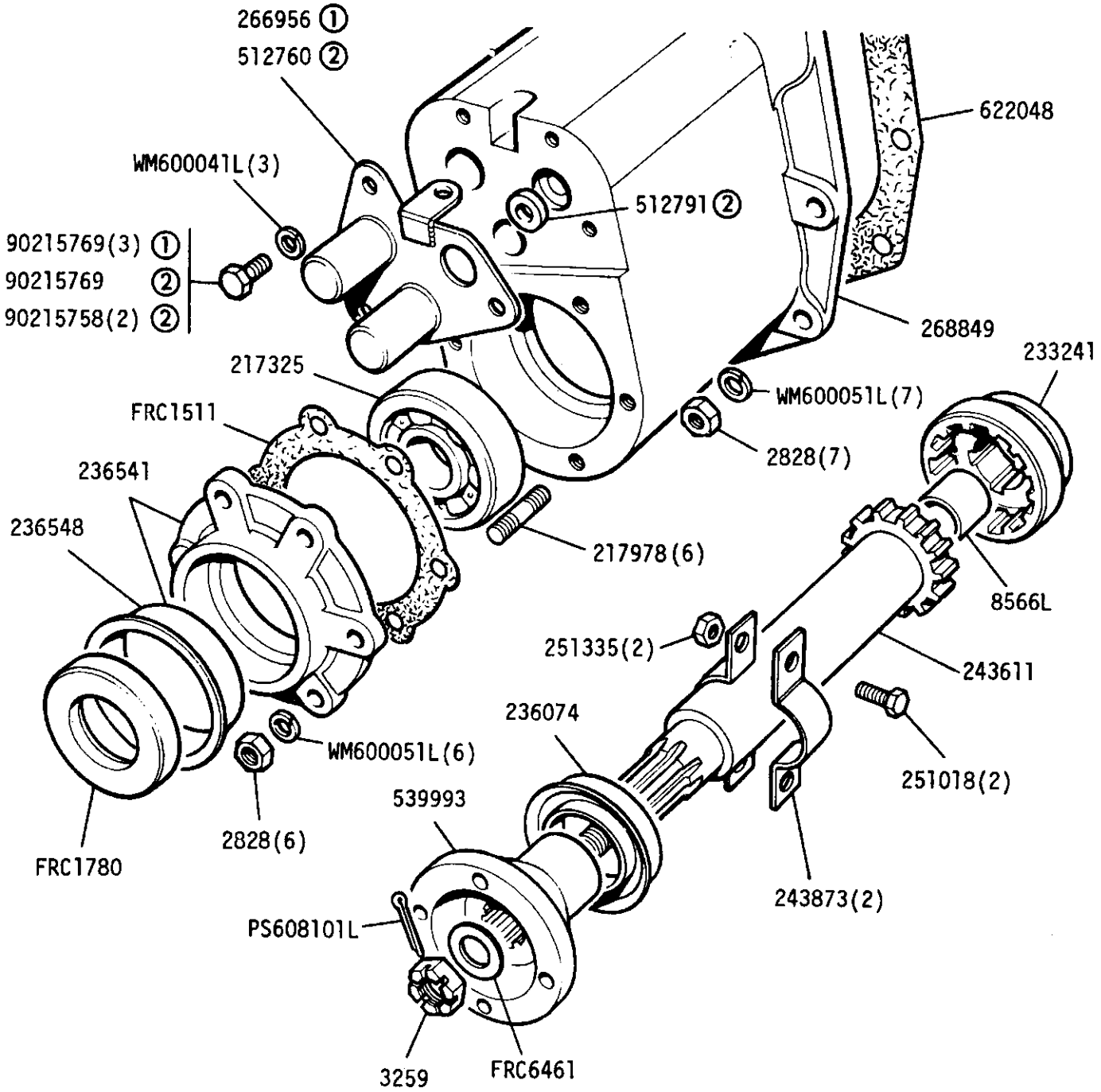

① Except 1 Ton

② 109 1 Ton. Optional on all other models

GROUP D

GEARBOX - Main Gear Lever Except 109 V8

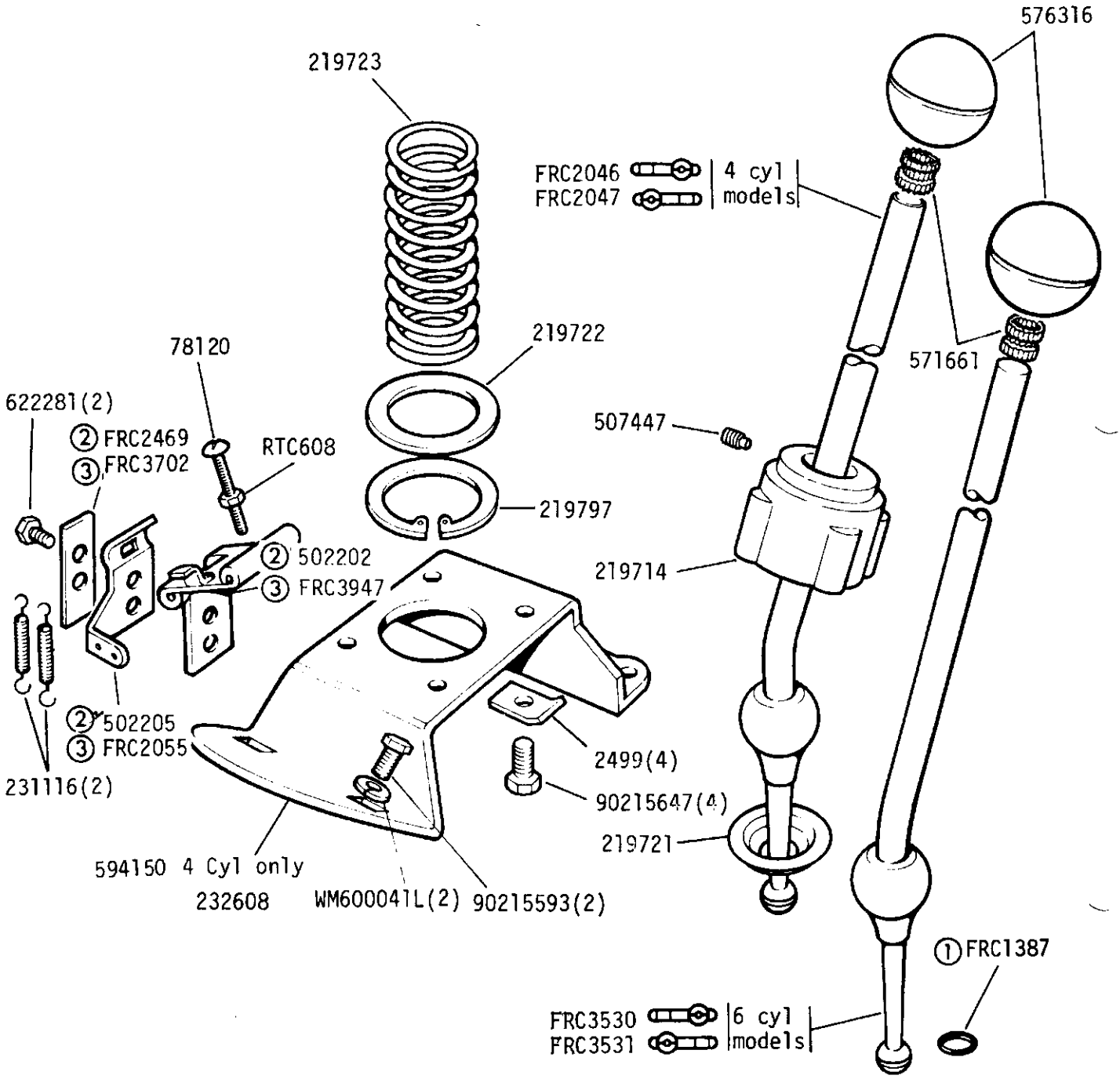

① Early models

② Up to gearbox numbers 24601113C, 90442230C, 94131535C

③ From gearbox numbers 24601114C, 90442281C, 94131536C

GROUP D

GEARBOX - Selectors and Levers Except 109 V8

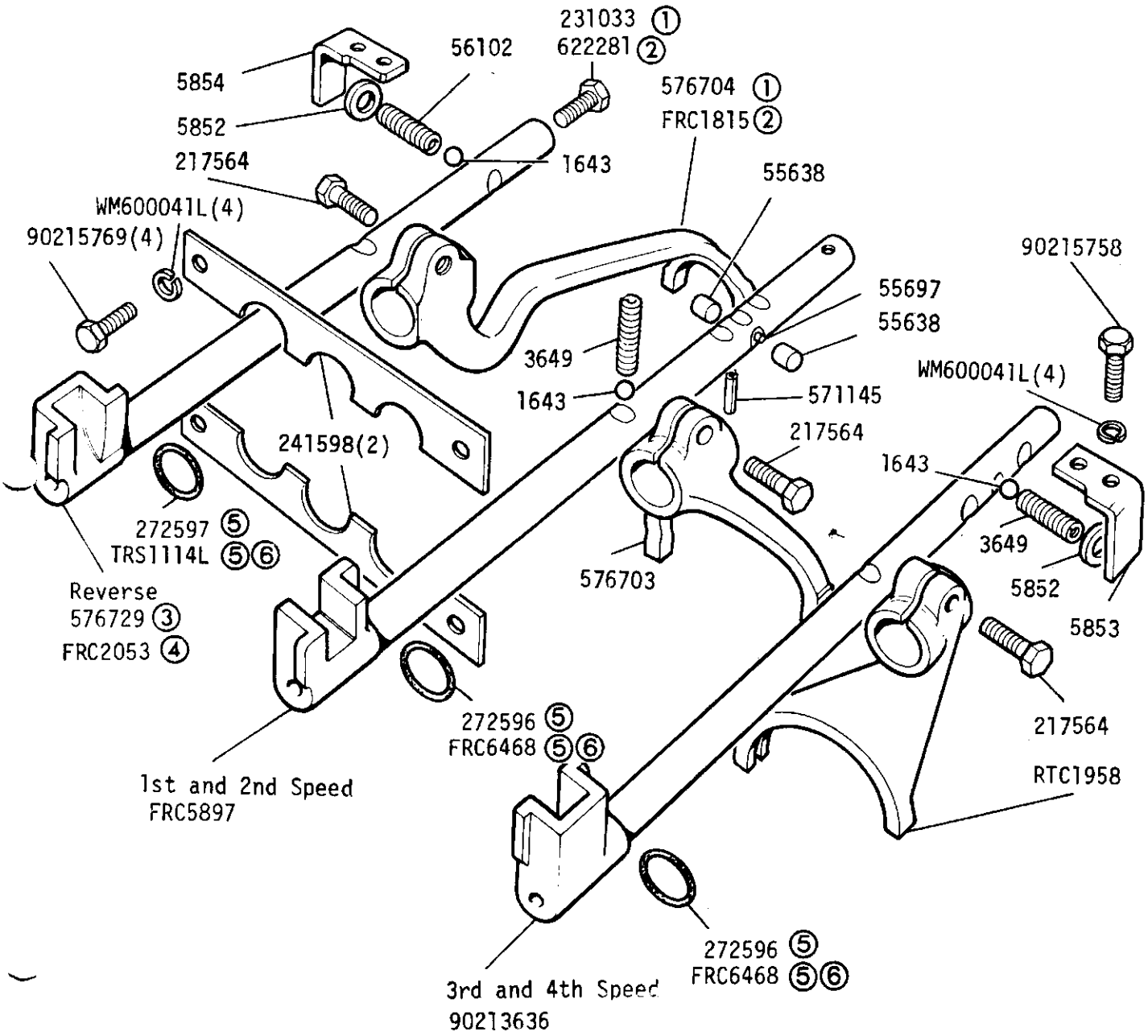

① Gearbox Suffix A

② From Gearbox Suffix B onwards

③ Up to September 1979

④ From October 1979 onwards

⑤ Alternatives but must be used as a complete set

⑥ Also use washer FRC6938

GROUP D

GEARBOX - Selector rod, four wheel drive Except 109 V8

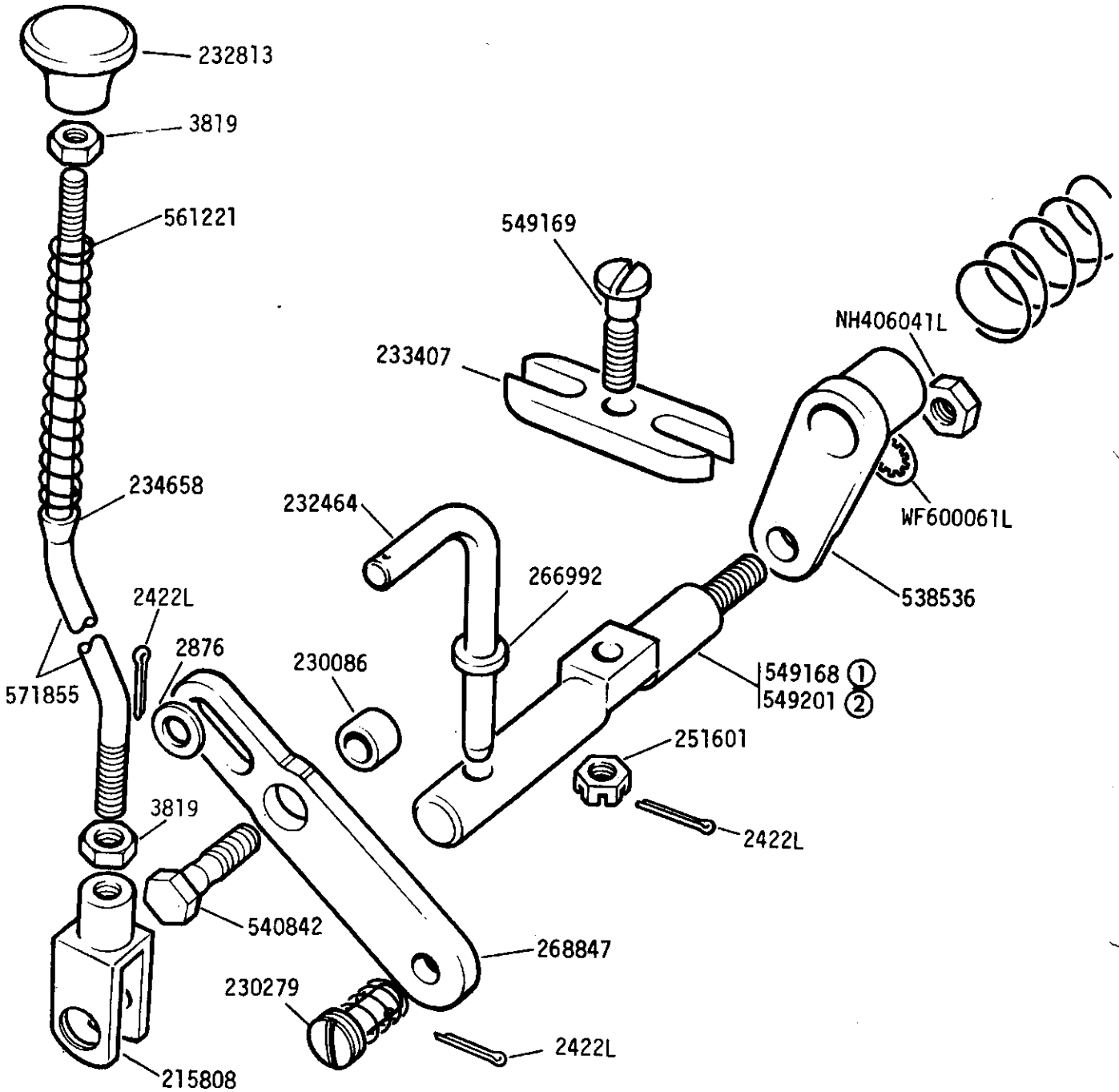

①Except 1 Ton

②109 1 Ton. Optional on all other models

GROUP D

GEARBOX - Selector shaft, four wheel drive Except 109 V8

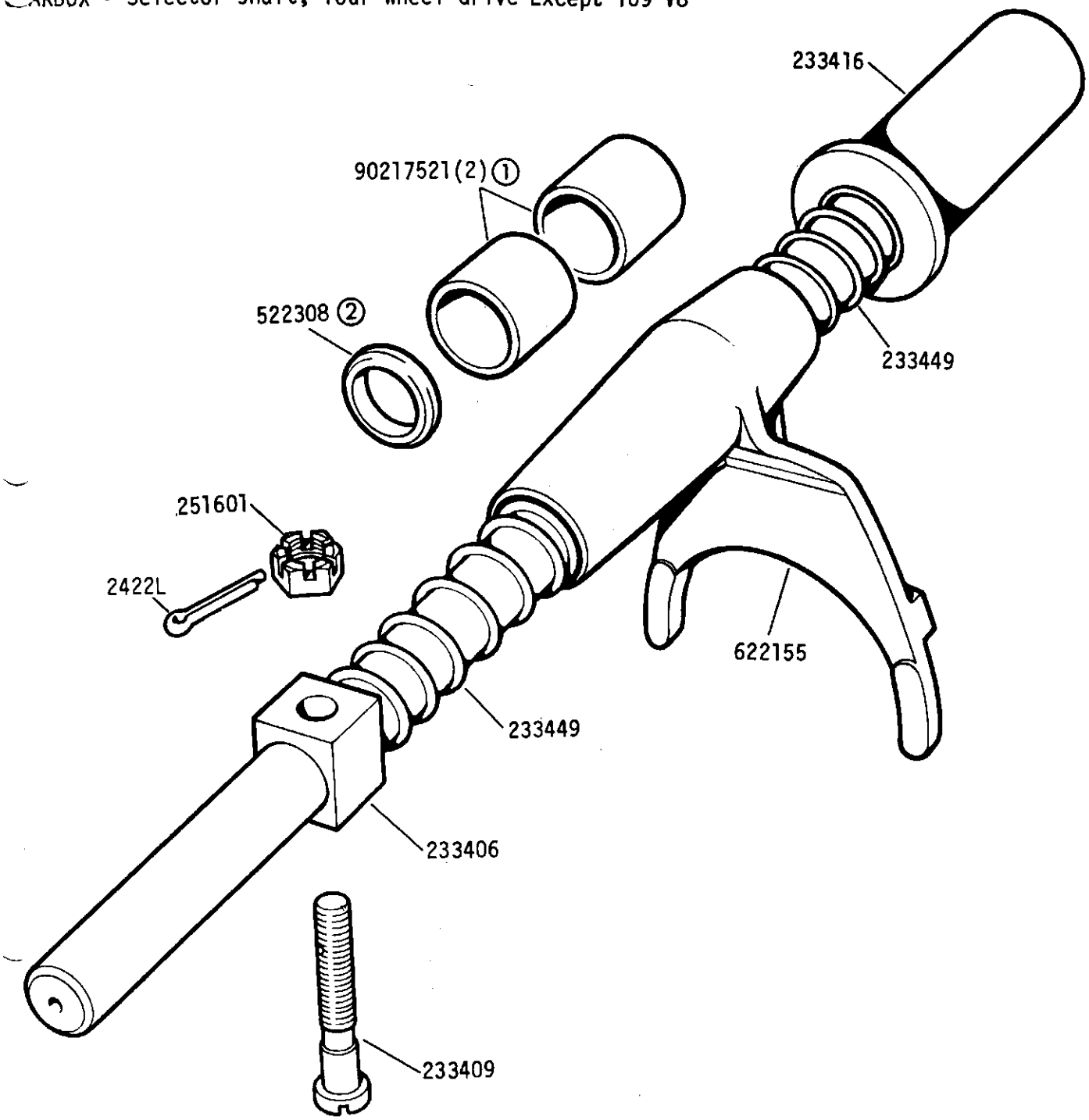

① For use with early type selector fork with replaceable bushes

② 109 1 Ton only

GROUP D
GEARBOX - Transfer gear change lever Except 109 V8

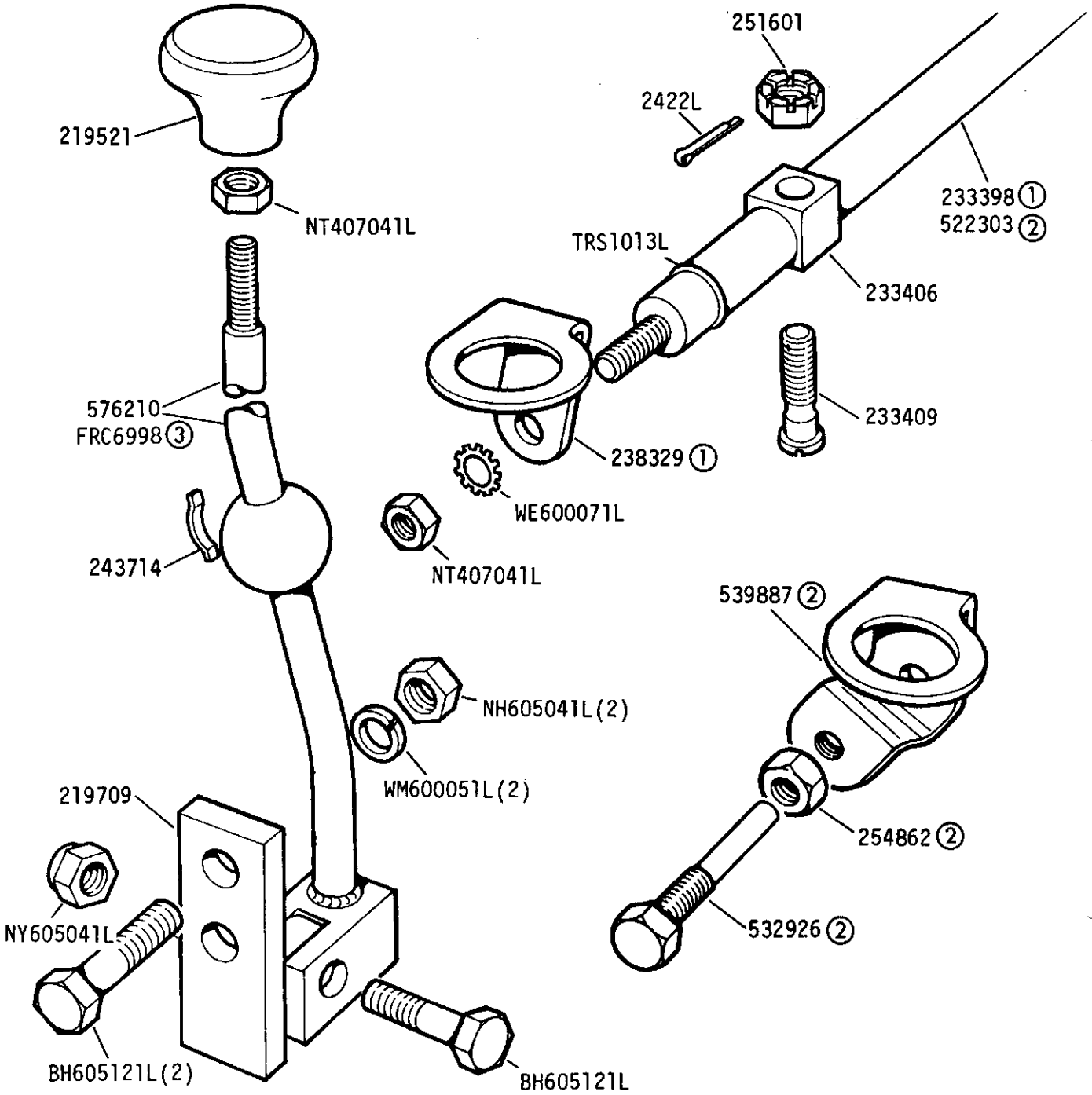

① Except 1 Ton
② 109" 1 Ton. Optional on all other models
③ From gearbox 90499976D, 24601171D onwards.

GROUP D

GEARBOX - Selector fork, transfer gear lever Except 109 V8

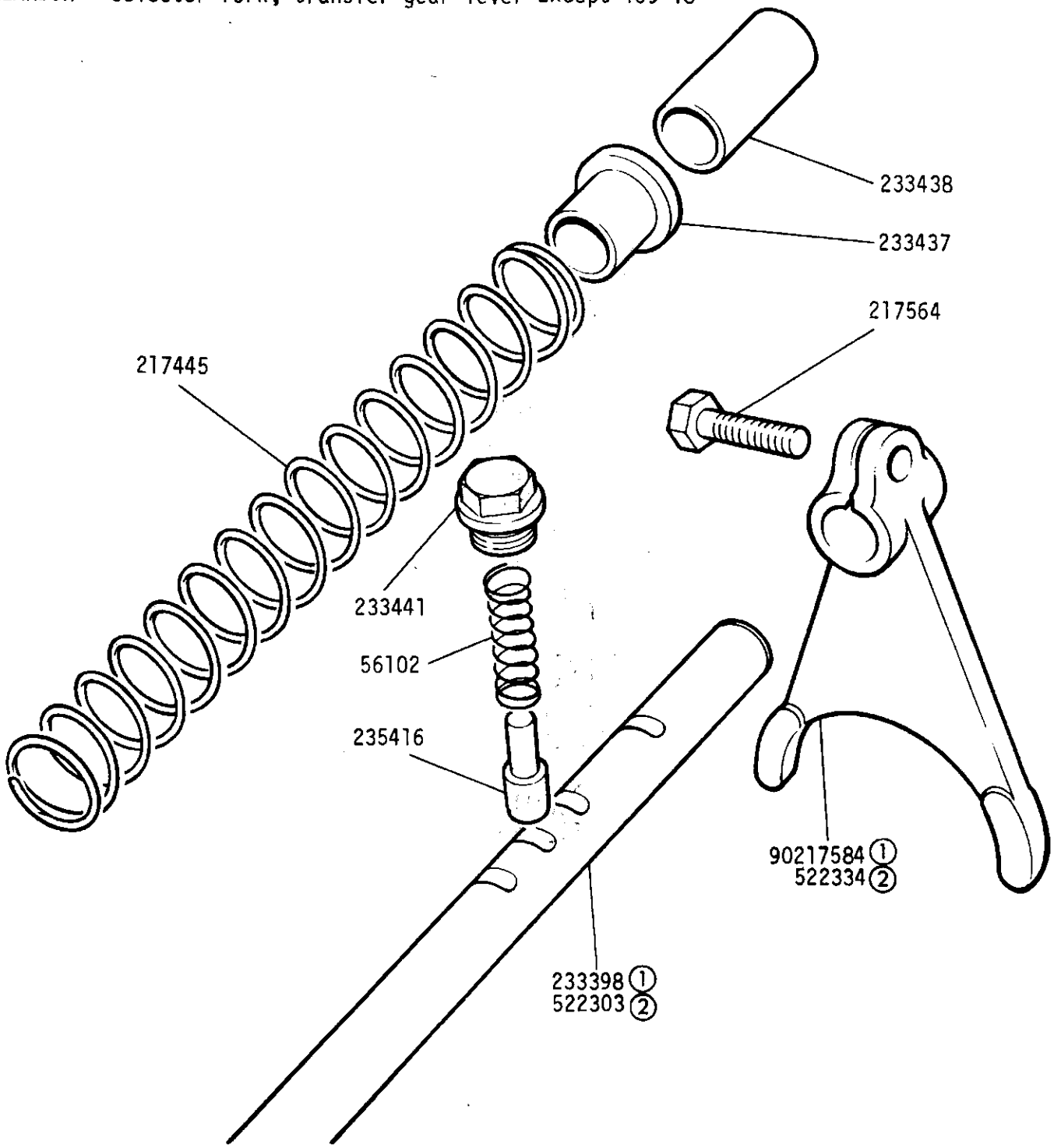

① Except 1 Ton
② 109 1 Ton, Optional on all other models

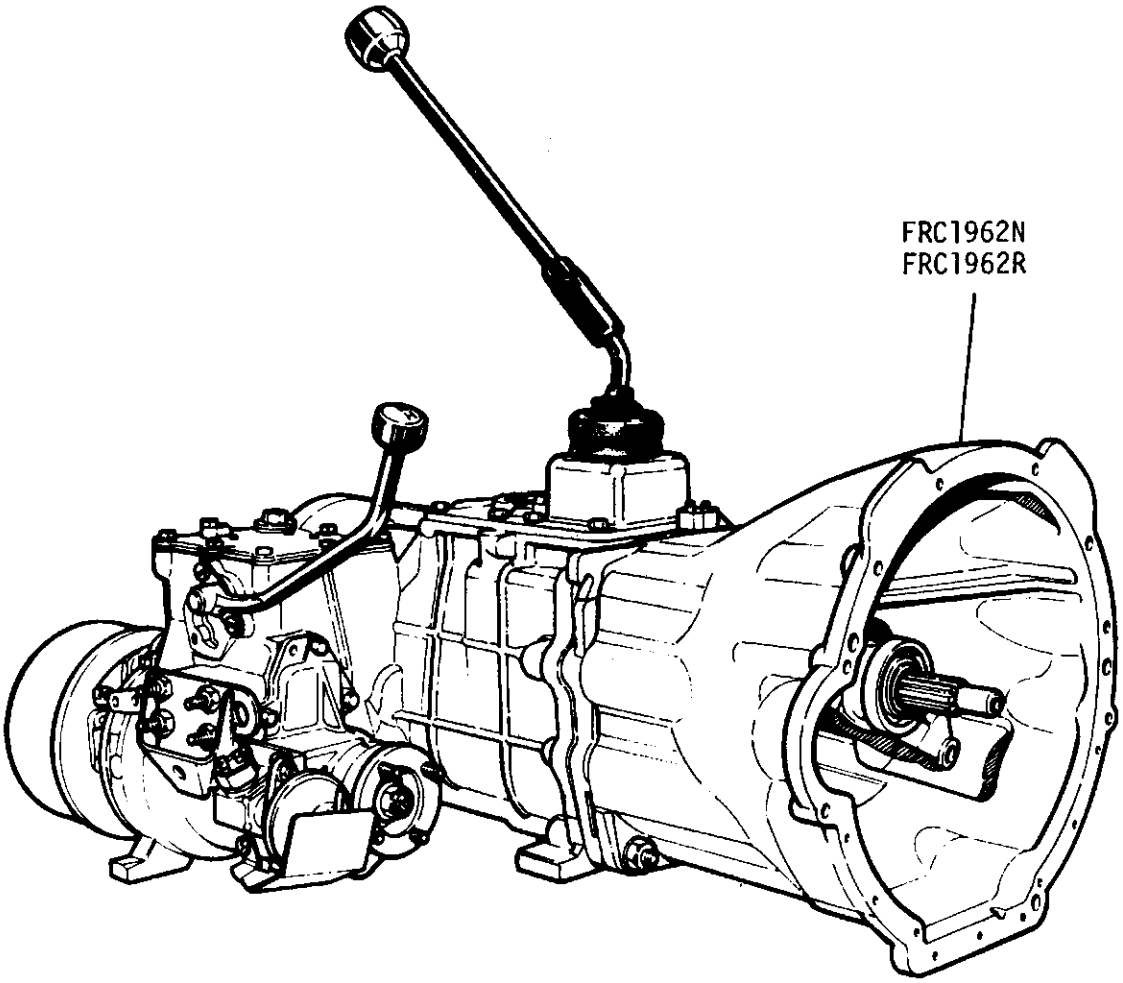
FRC1962N
FRC1962R

GEARBOX - Bell Housing 109 V8

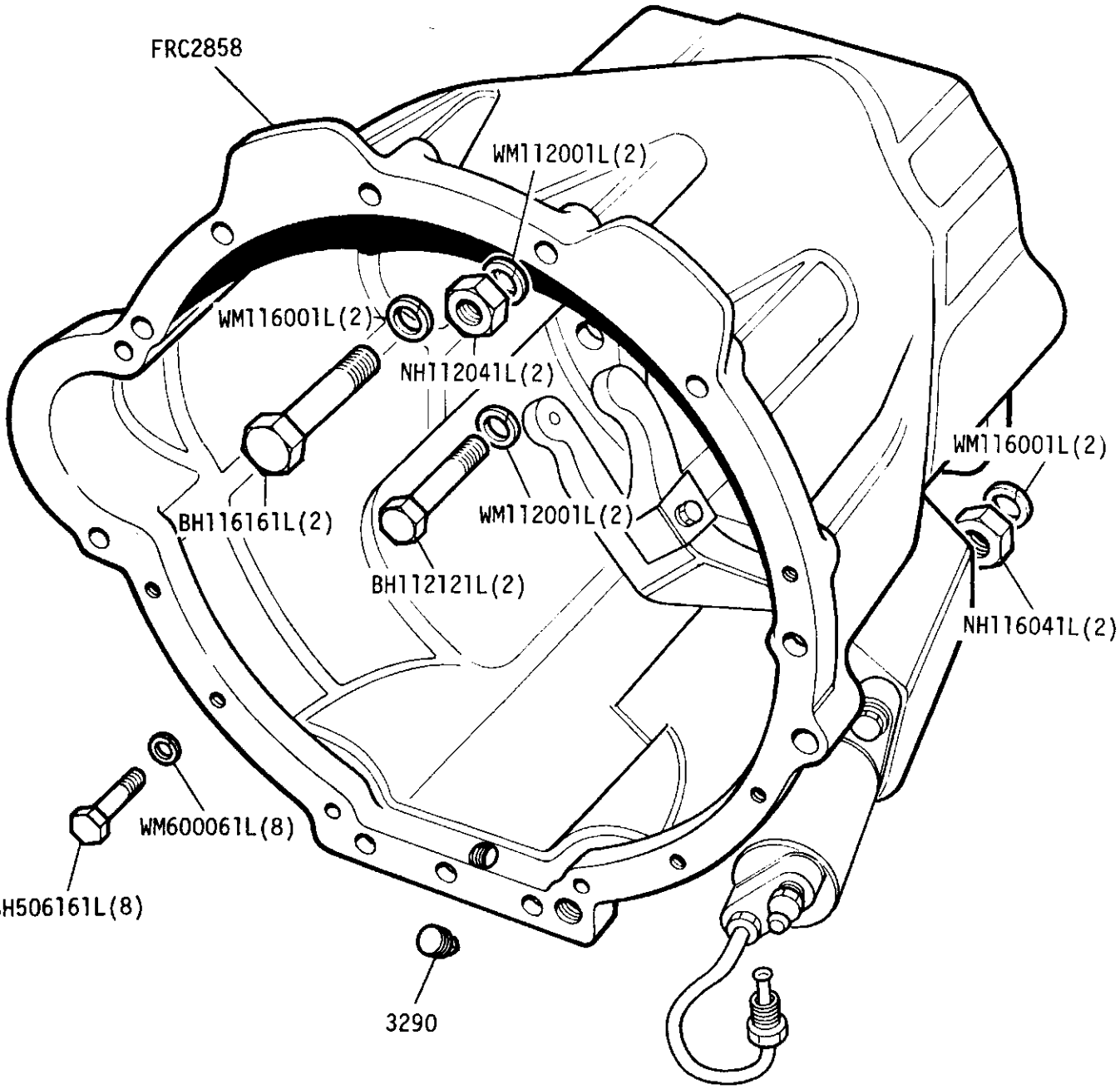

GROUP D
GEARBOX - Bottom Cover for Bell Housing 109 V8

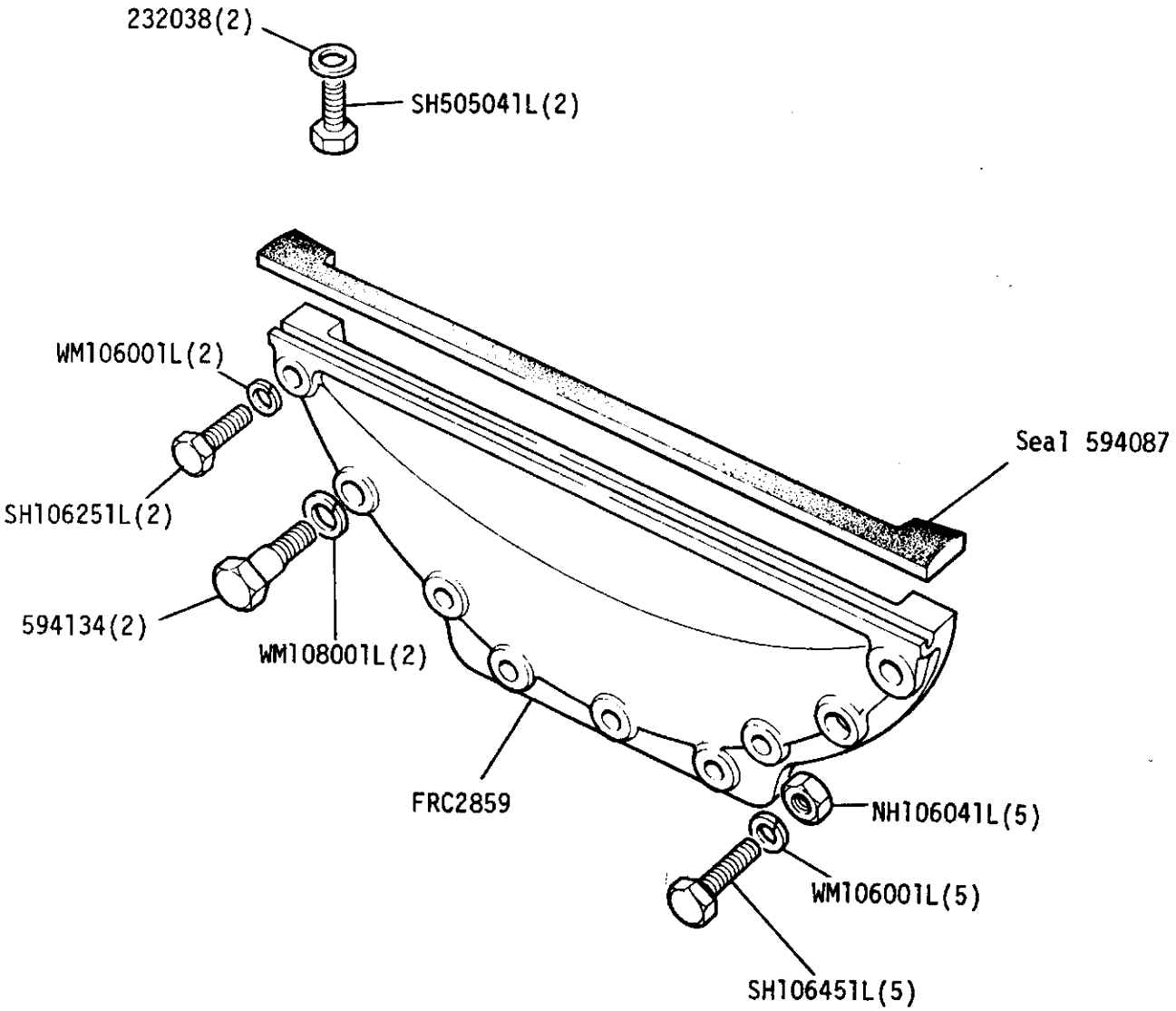

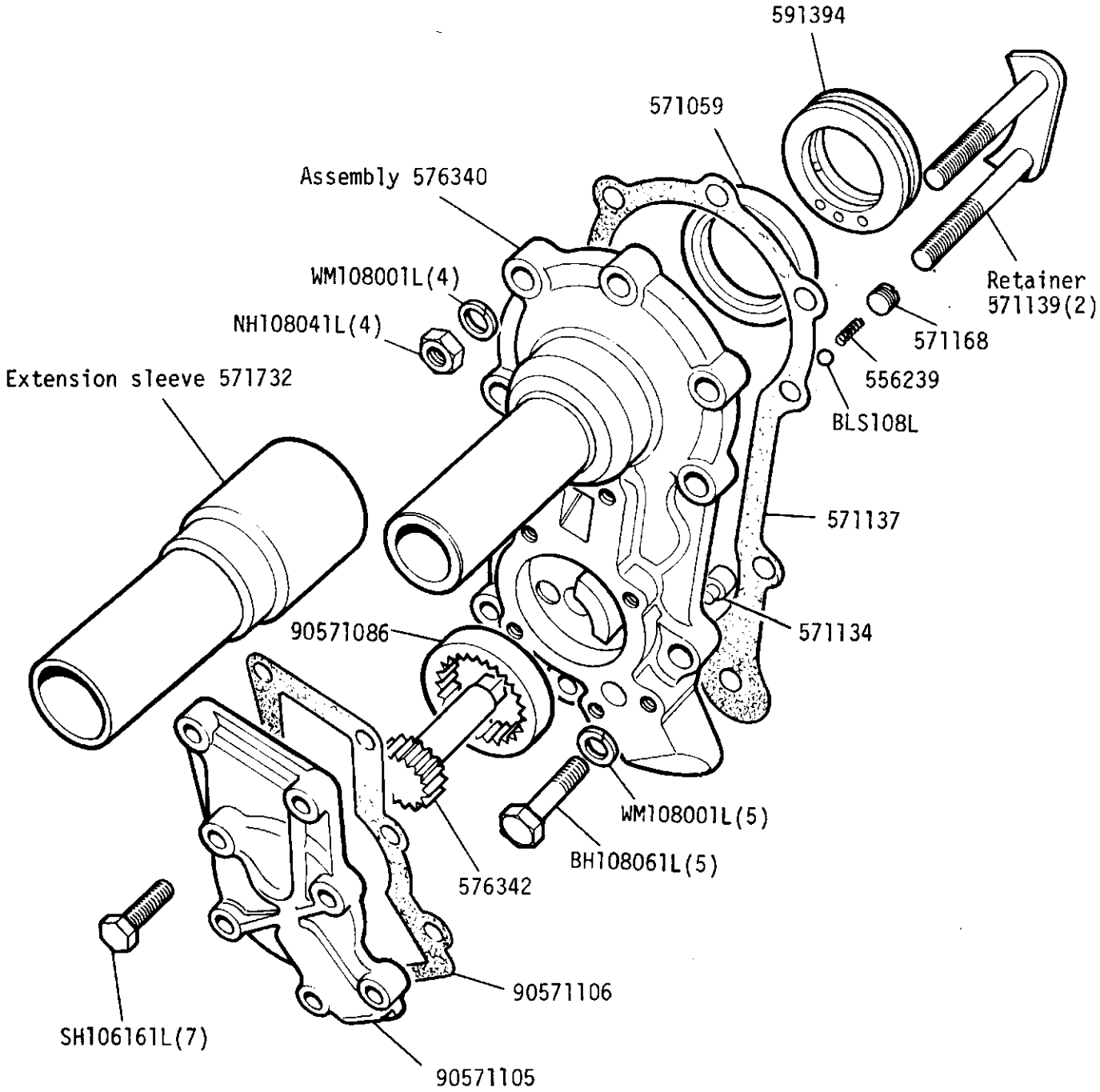

All items on this page are part of oil pump assembly, except extension sleeve and bearing retainer.

GROUP D
GEARBOX - Main and Transfer Casing (front portion) 109 V8

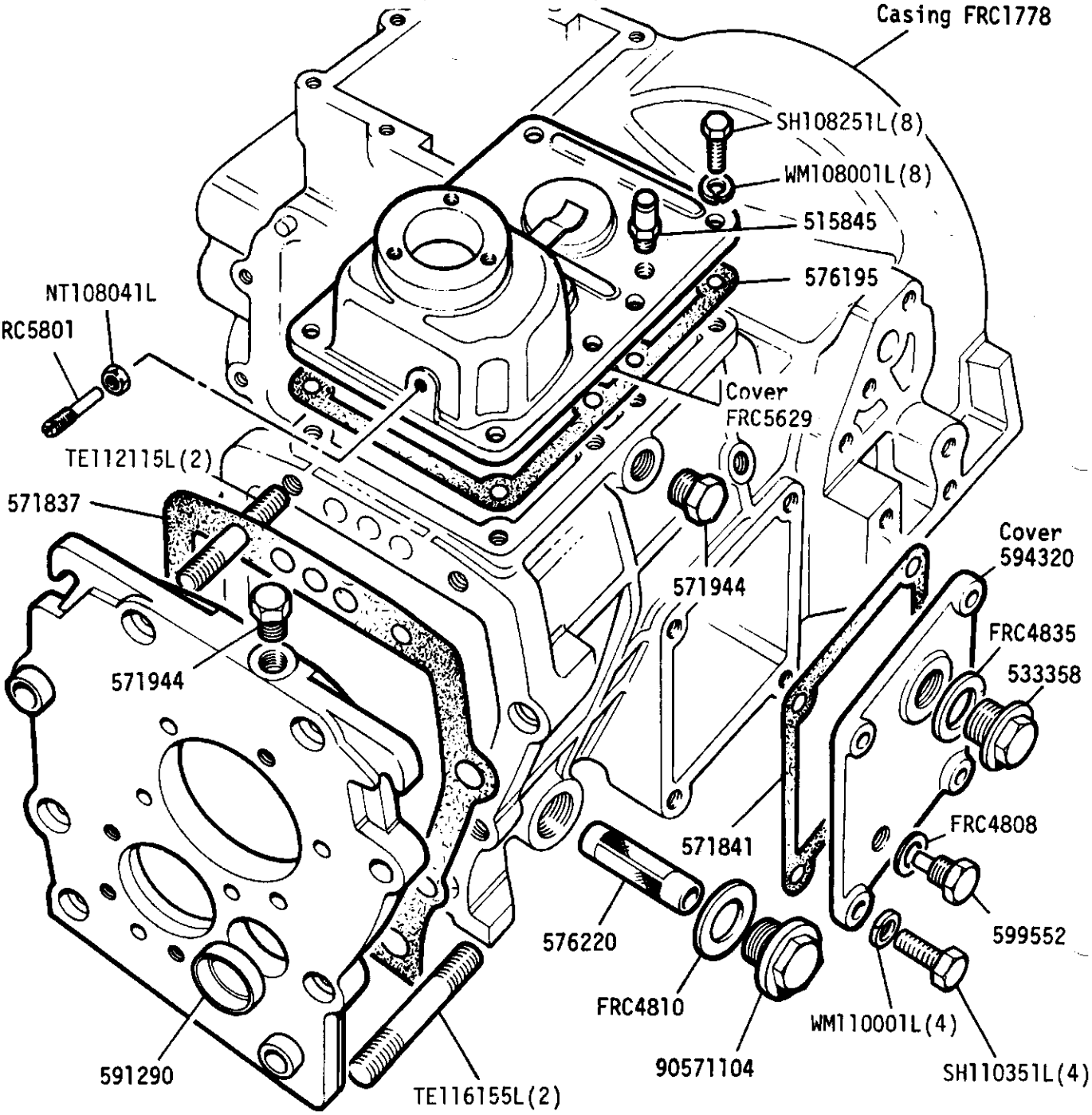

Cover plate 608417 includes filler plug, magnetic plug and fixings

GEARBOX - Main and Transfer Casing (rear portion) 109 V8

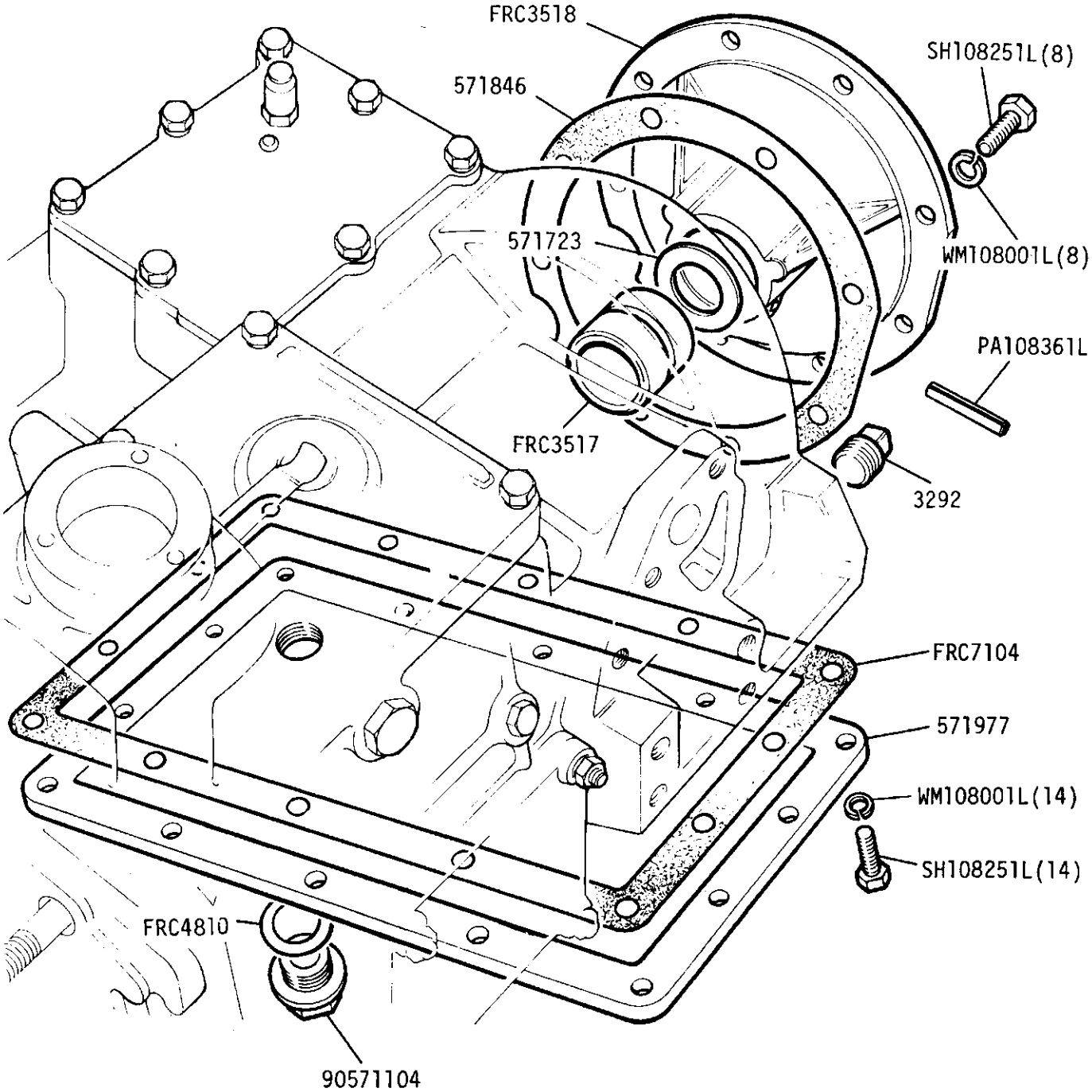

GROUP D
GEARBOX - Main and Transfer Casing – Transfer portion 109 V8

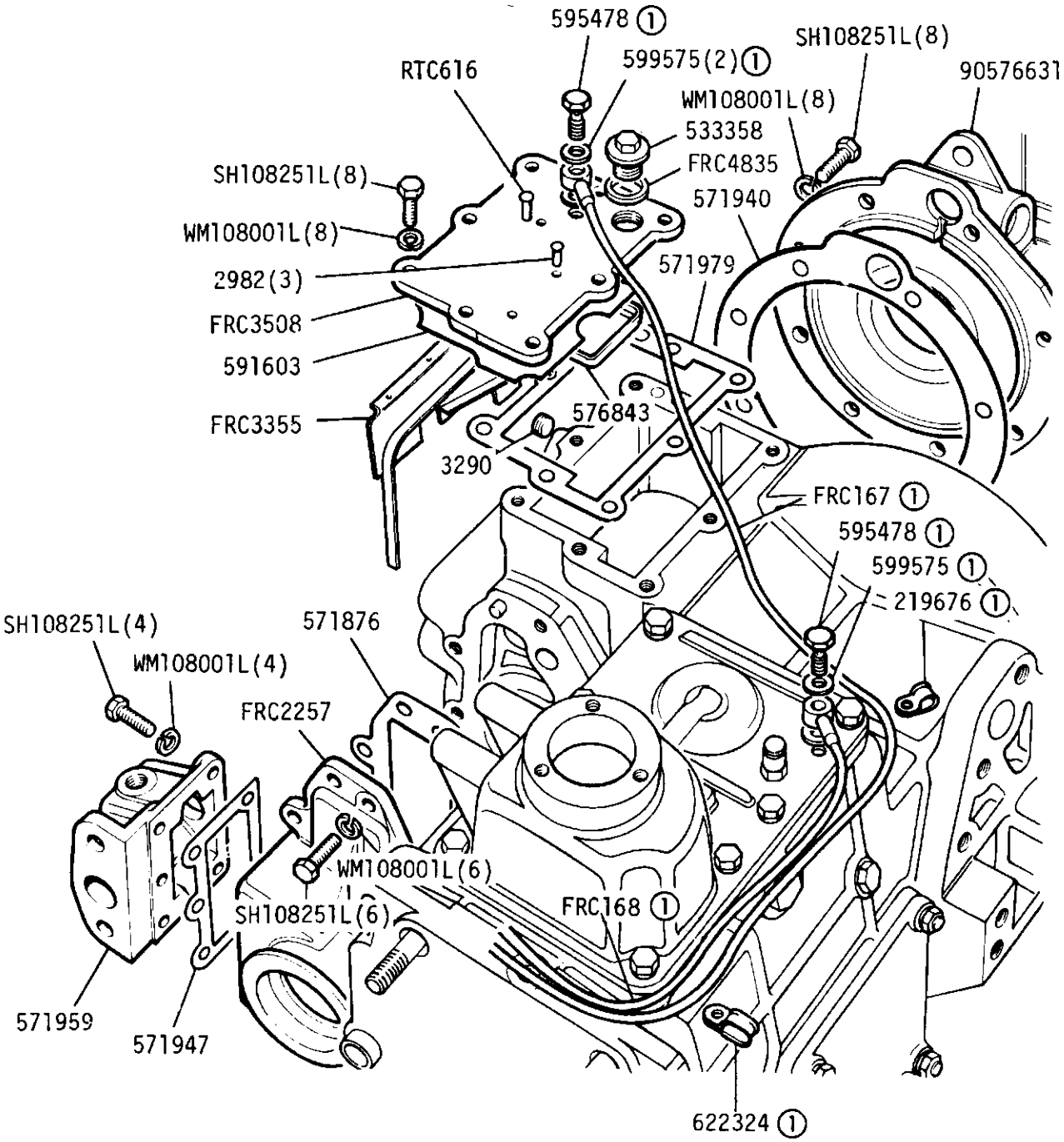

① Not part of gearbox assembly

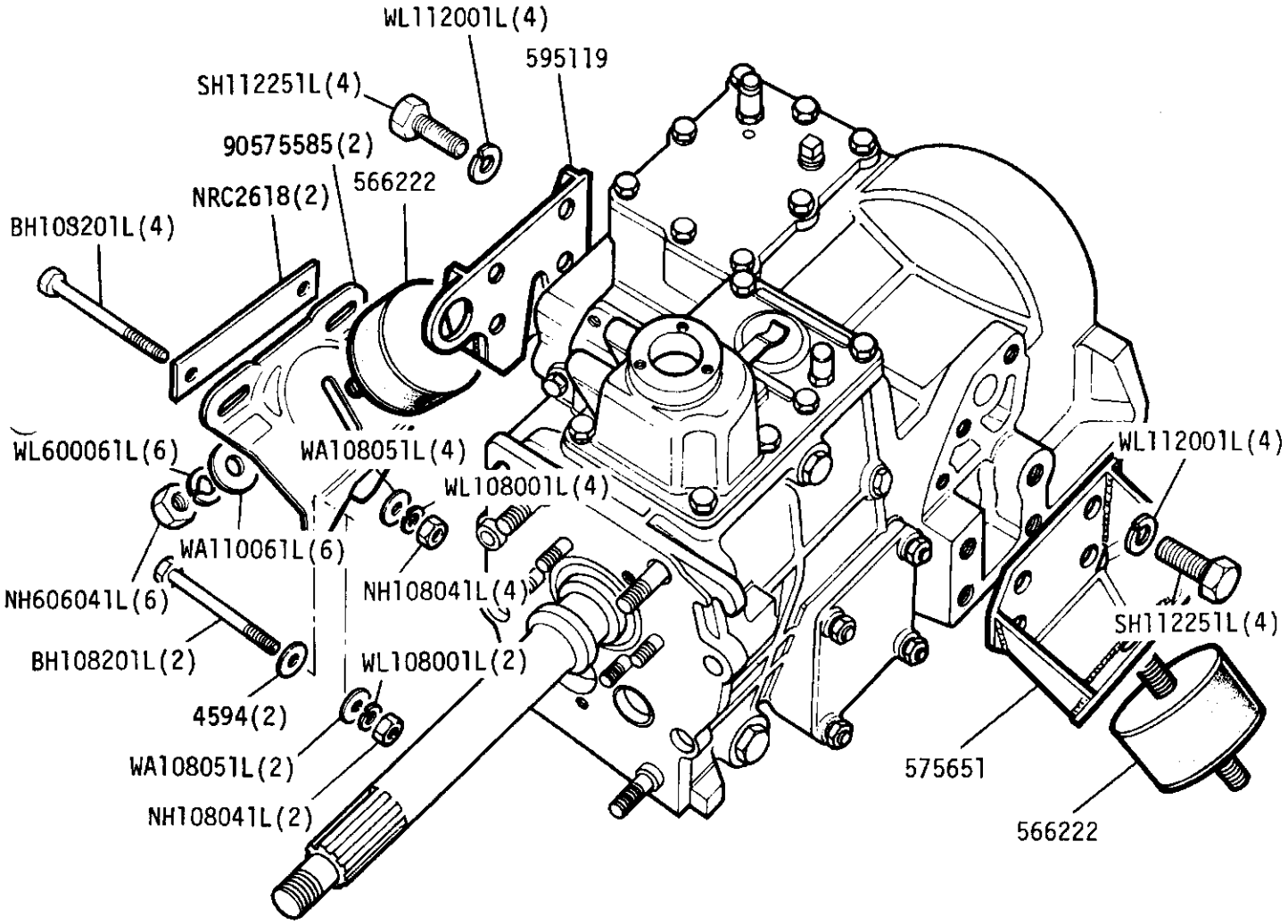

Suspension rubbers and fixings are not part of gearbox assembly

GROUP D
GEARBOX - Primary Pinion, 2nd and 3rd Mainshaft Gears 109 V8

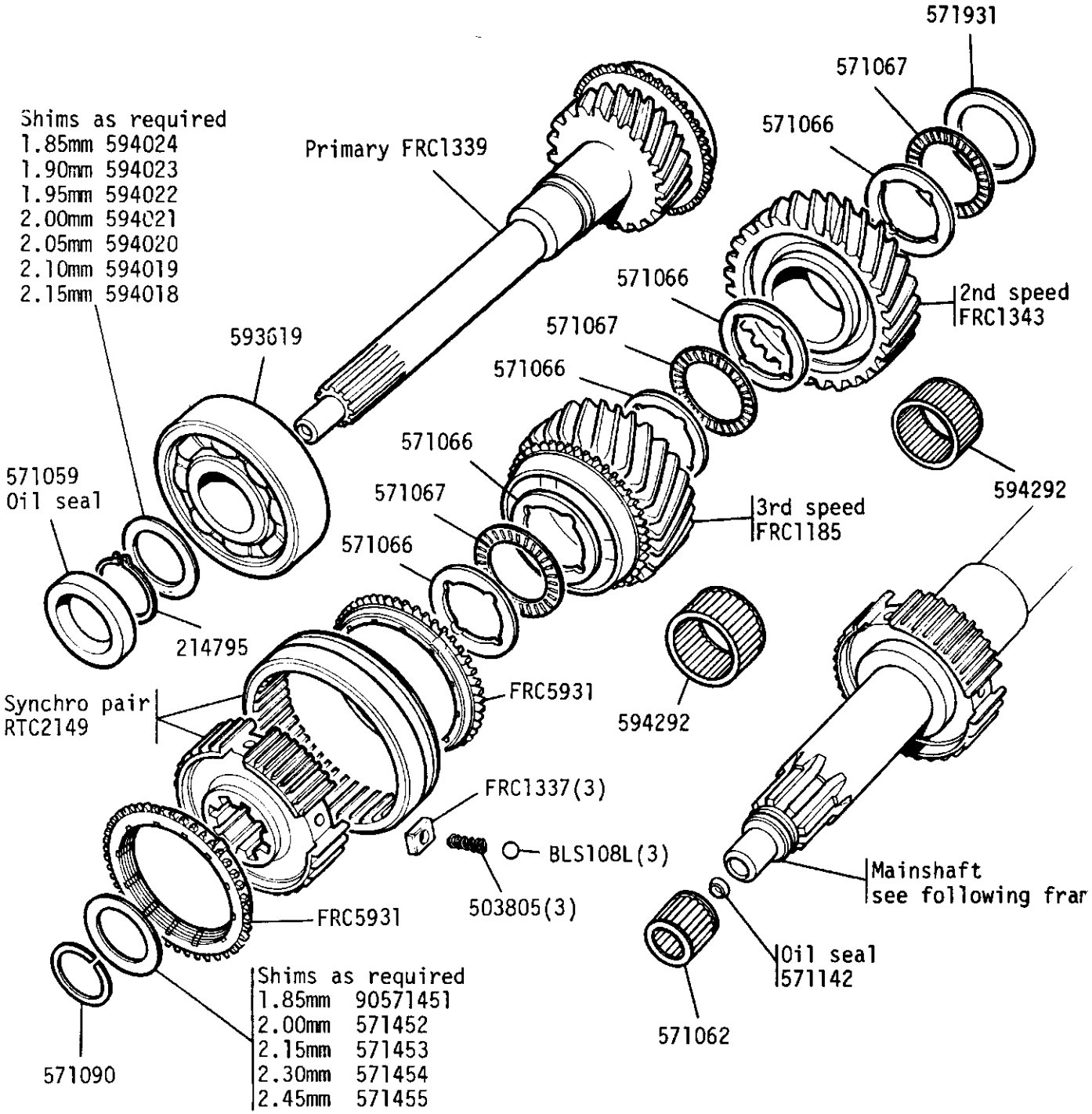

GROUP D
GEARBOX - 1st Speed Mainshaft Gear and Transfer Gear 109 V8

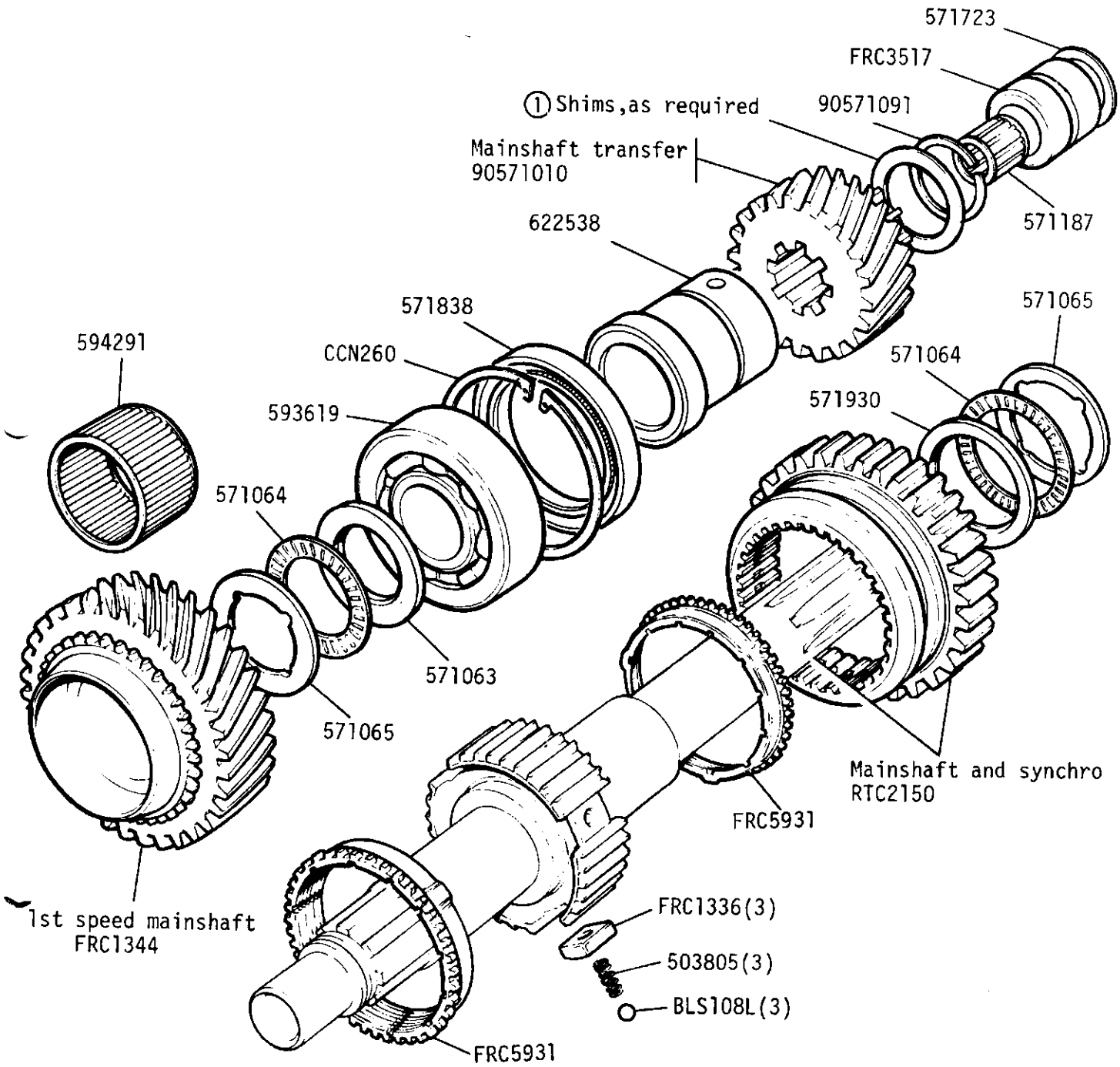

①	1.65mm	593814	1.85mm	593818
	1.70mm	593815	1.90mm	593819
	1.75mm	593816	1.95mm	593820
	1.80mm	593817	2.00mm	593821

GROUP D
GEARBOX - Layshaft Gears and Reverse 109 V8

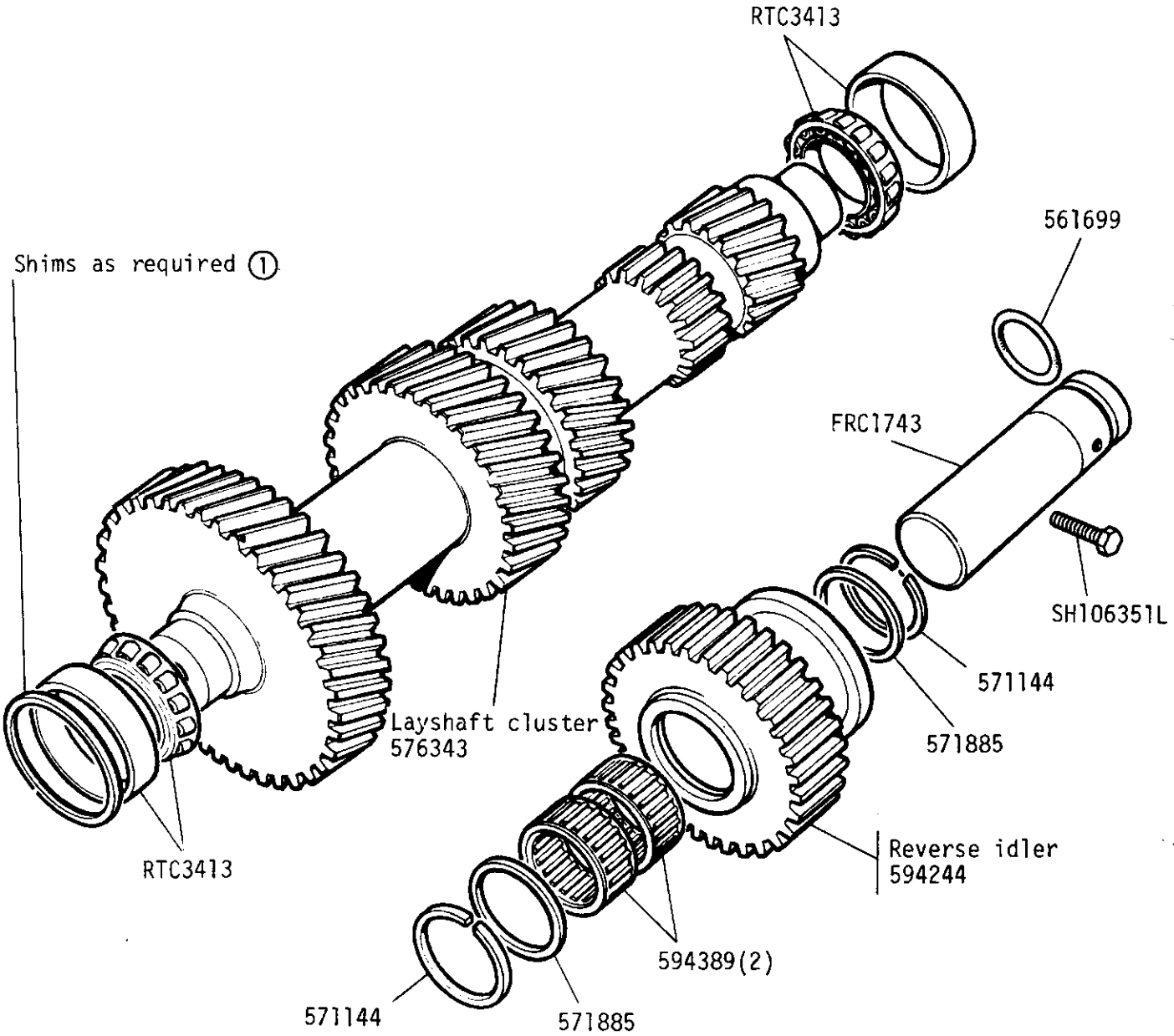

①	1.55mm	576351	1.80mm	576356	2.05mm	576361	2.30mm	576366
	1.575mm	FRC3642	1.825mm	FRC3467	2.075mm	FRC3652	2.325mm	FRC3657
	1.60mm	576352	1.85mm	576357	2.10mm	576362	2.35mm	576367
	1.625mm	FRC3643	1.875mm	FRC3648	2.125mm	FRC3653	2.375mm	FRC3658
	1.65mm	576353	1.90mm	576358	2.15mm	576363	2.40mm	576368
	1.675mm	FRC3644	1.925mm	FRC3649	2.175mm	FRC3654	2.425mm	FRC3659
	1.70mm	576354	1.95mm	576359	2.20mm	576364	2.45mm	576369
	1.725mm	FRC3645	1.975mm	FRC3650	2.225mm	FRC3655	2.475mm	FRC3660
	1.75mm	576355	2.00mm	576360	2.25mm	576365	2.50mm	576370
	1.775mm	FRC3646	2.025mm	FRC3651	2.275mm	FRC3656		

GROUP D
GEARBOX - Intermediate Gears 109 V8

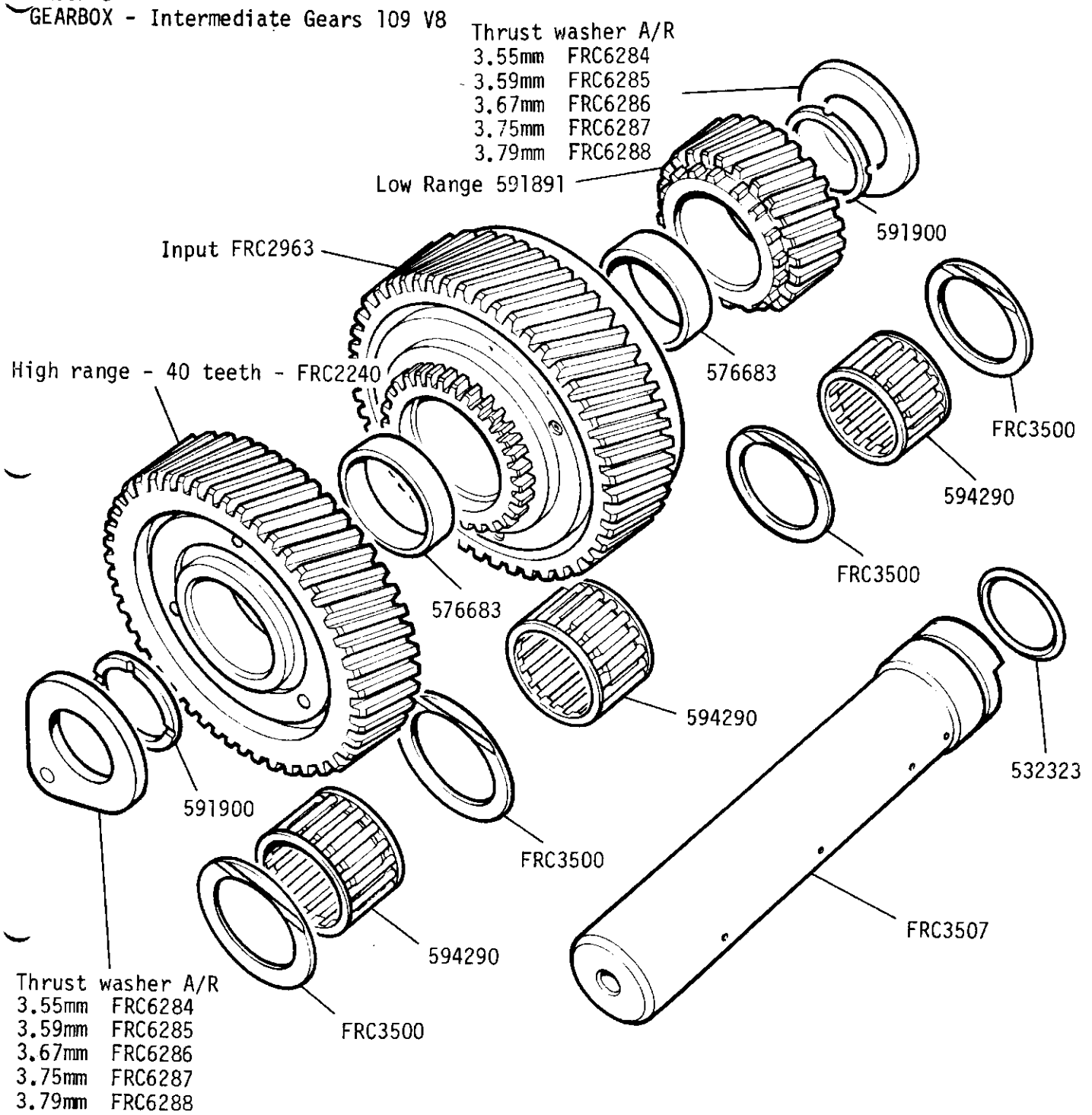

GROUP D
GEARBOX - Front Output Shaft and Vacuum Actuator 109 V8

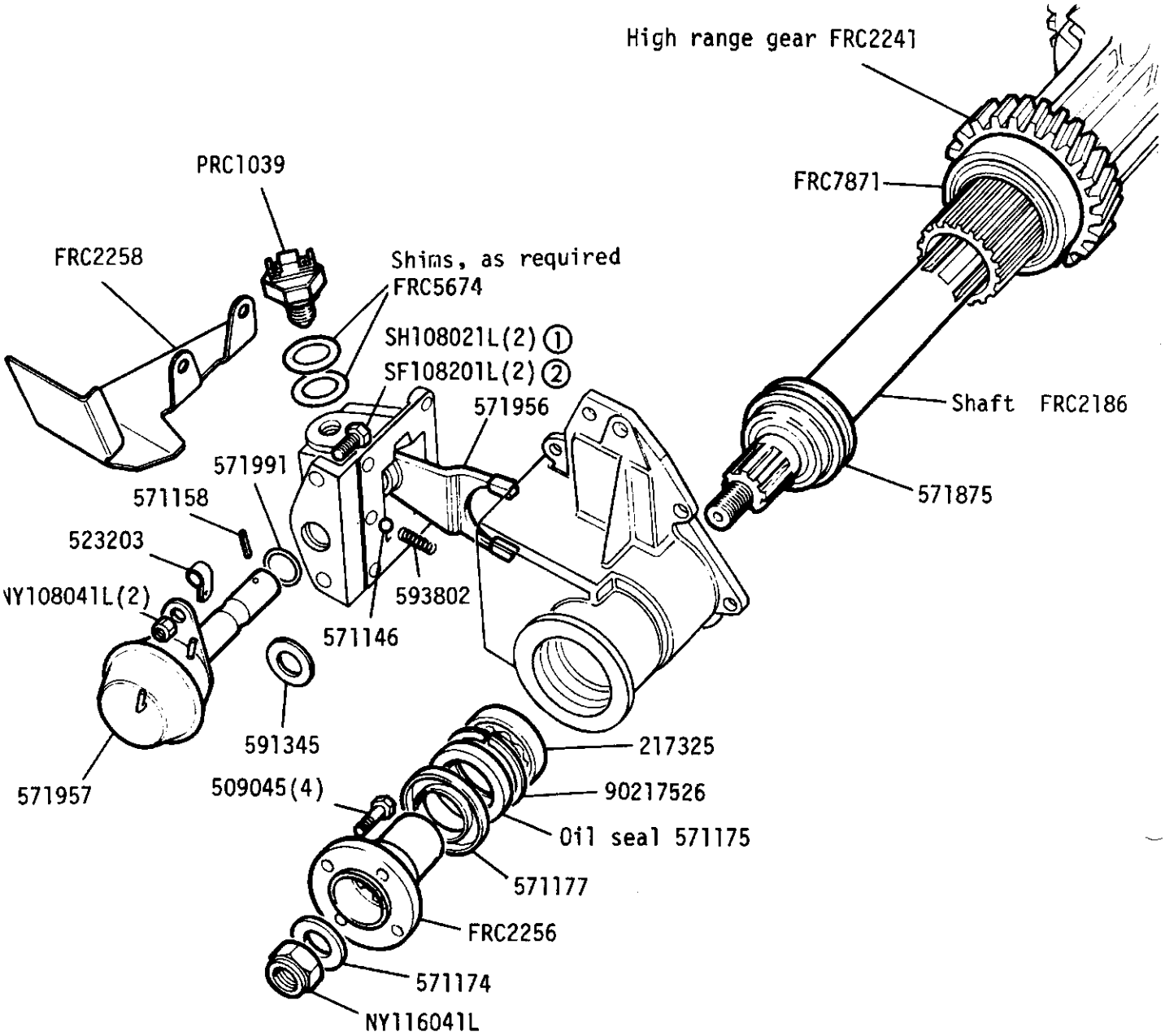

① Hexagon head type ② Countersunk head type)	Check before ordering

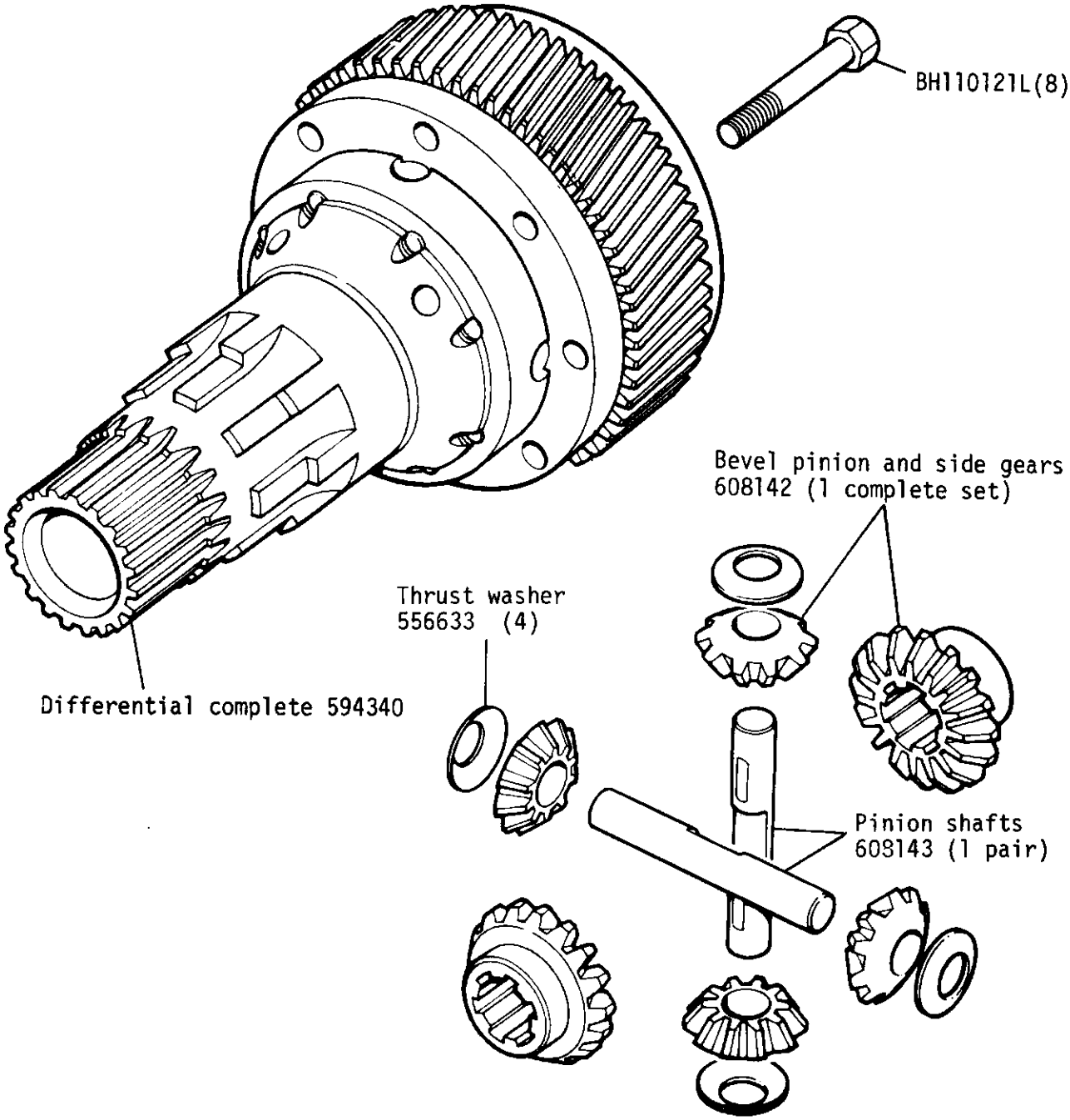

Differential includes Low range gear and fixings as balanced set

GROUP D
GEARBOX - DIFFERENTIAL 109 V8 FROM GEARBOX No 88113134A

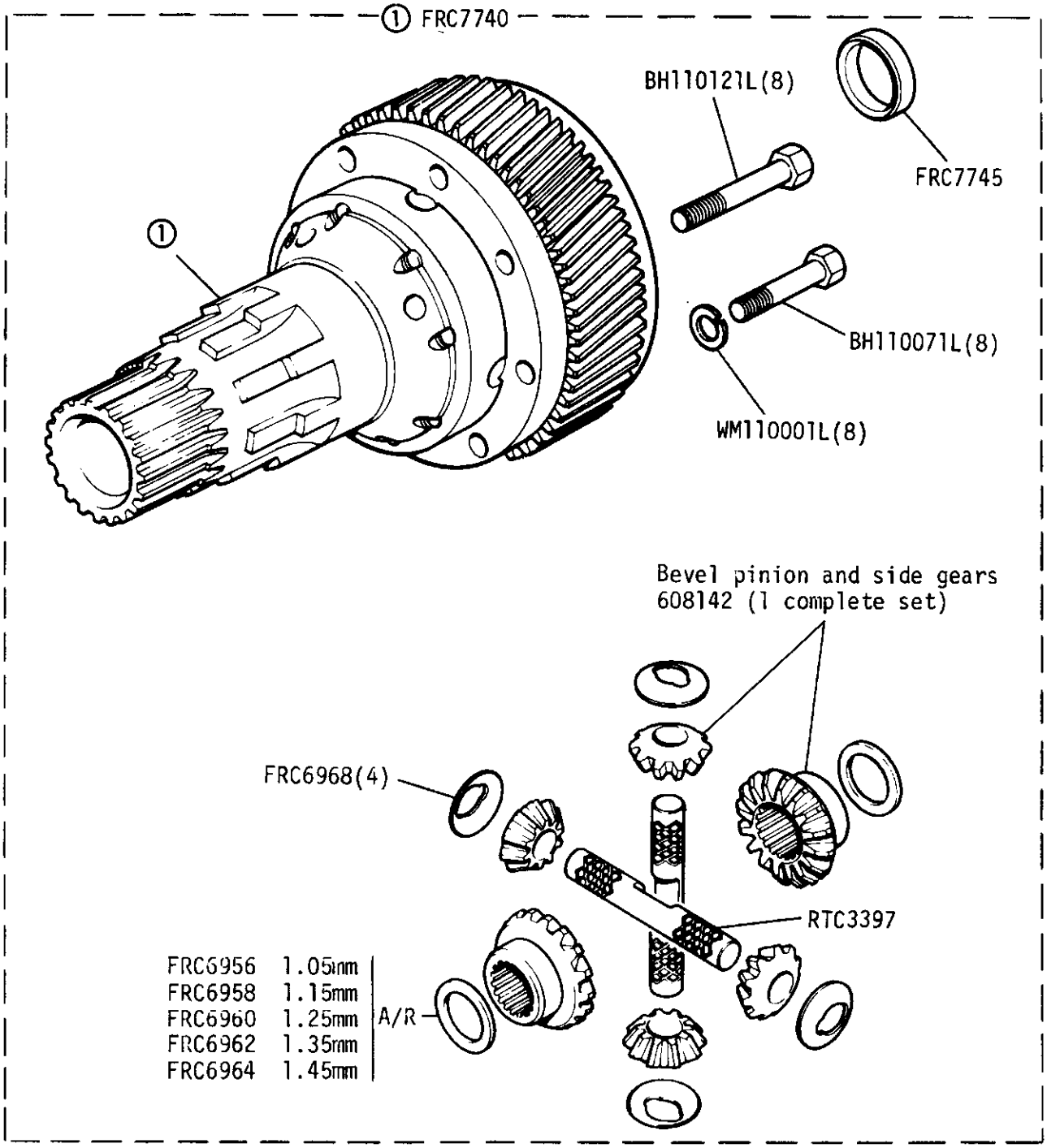

GROUP D

GEARBOX - Rear Output Shaft, Gears and Speedo Worm Drive 109 V8

1.65mm	593694
1.70mm	593695
1.75mm	593696
1.80mm	593697
1.85mm	593698
1.90mm	593699
1.95mm	593700
2.00mm	593701
2.05mm	593702
2.10mm	593703
2.15mm	593704
2.20mm	593705
2.25mm	593706
2.30mm	593707
2.35mm	593708
2.40mm	593709
.45mm	593710
2.50mm	593711
2.55mm	593712
2.60mm	593713
2.65mm	593714
2.70mm	593715
2.75mm	593716
2.80mm	593717

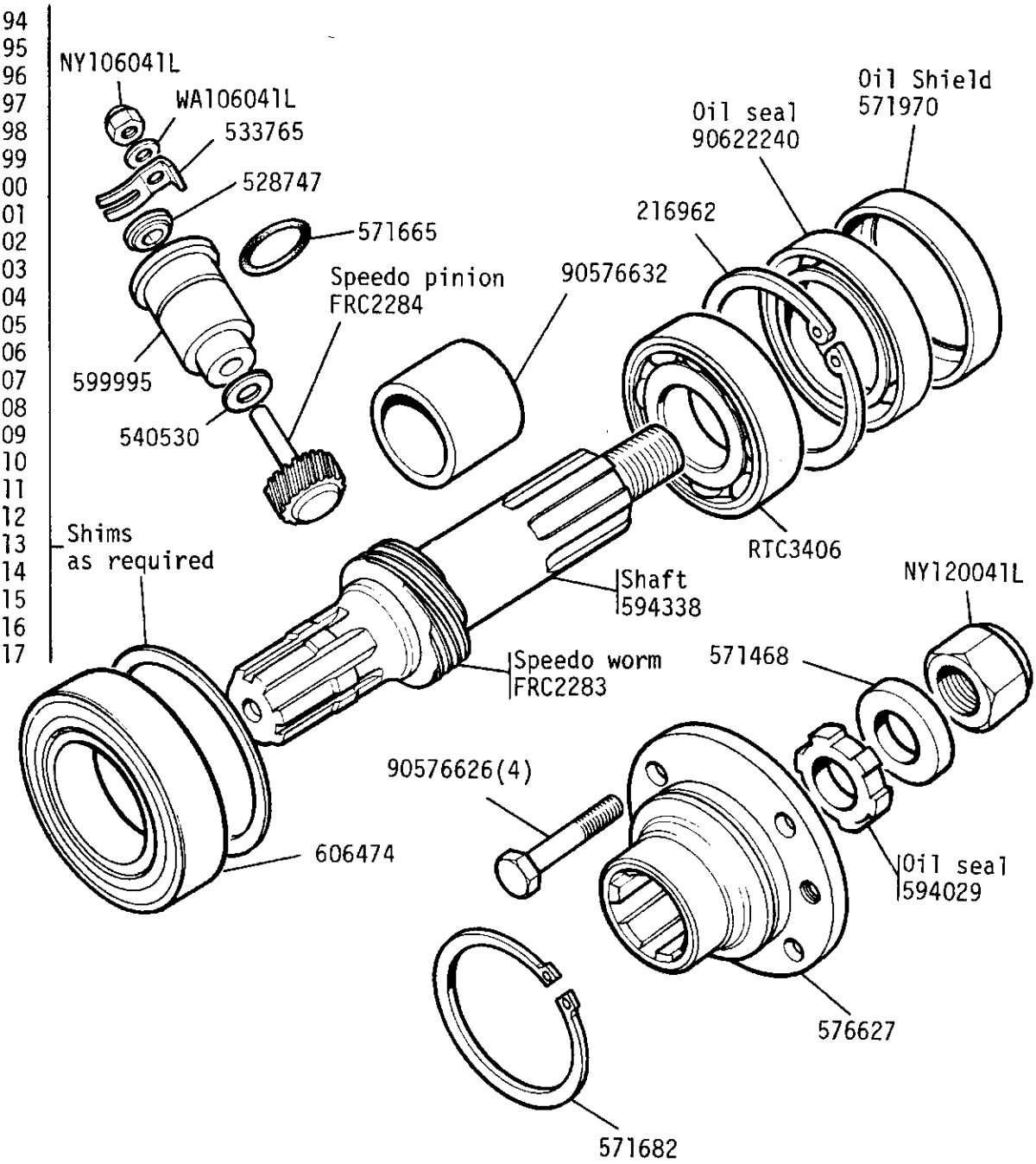

GROUP D

GEARBOX - Selector Shafts and Levers, Transfer Gearbox 109 V8

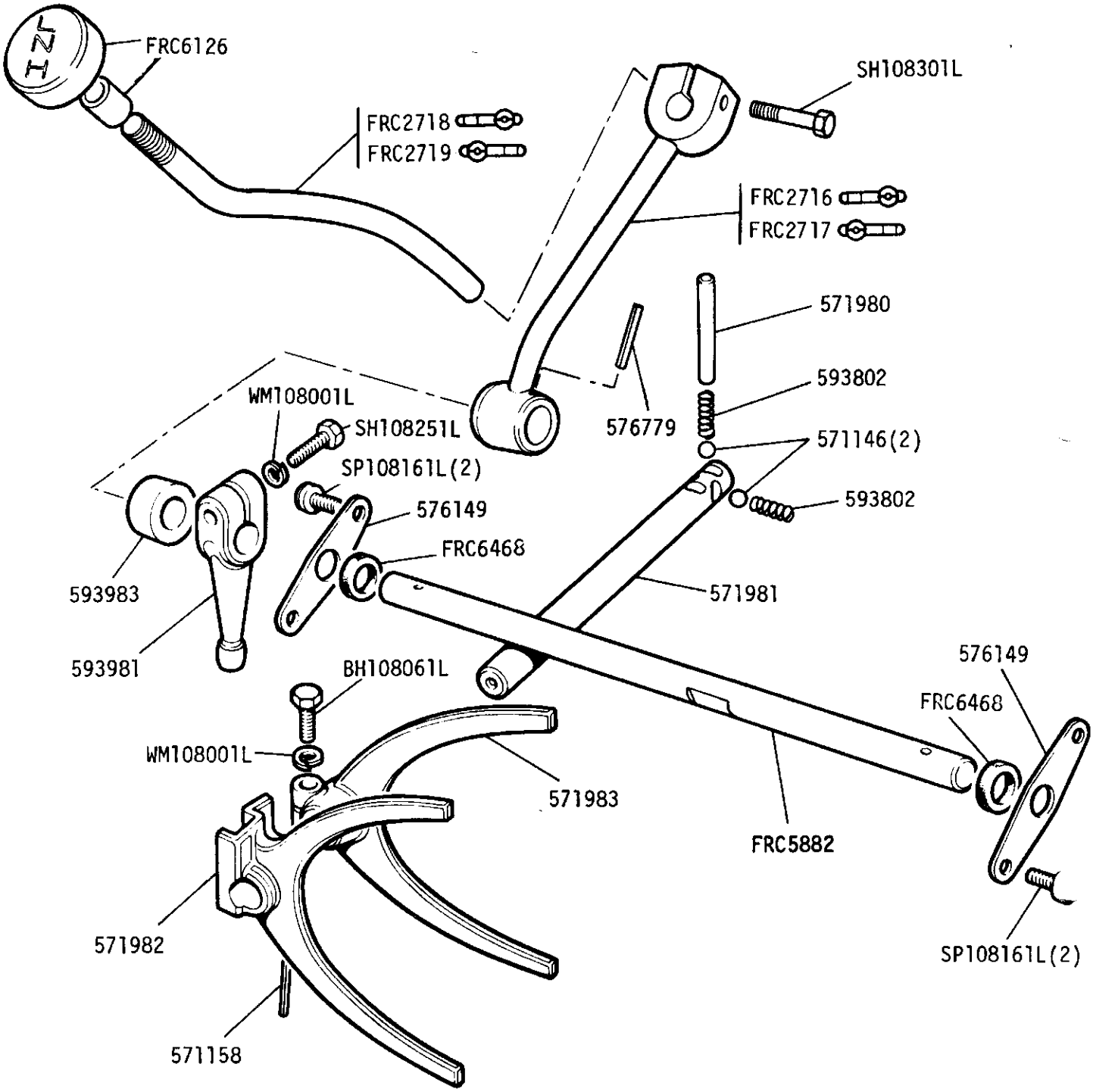

Transfer gear lever, knob and fixings are not part of gearbox assembly

GEARBOX - Selector Shafts and Levers, Main Gearbox 109 V8

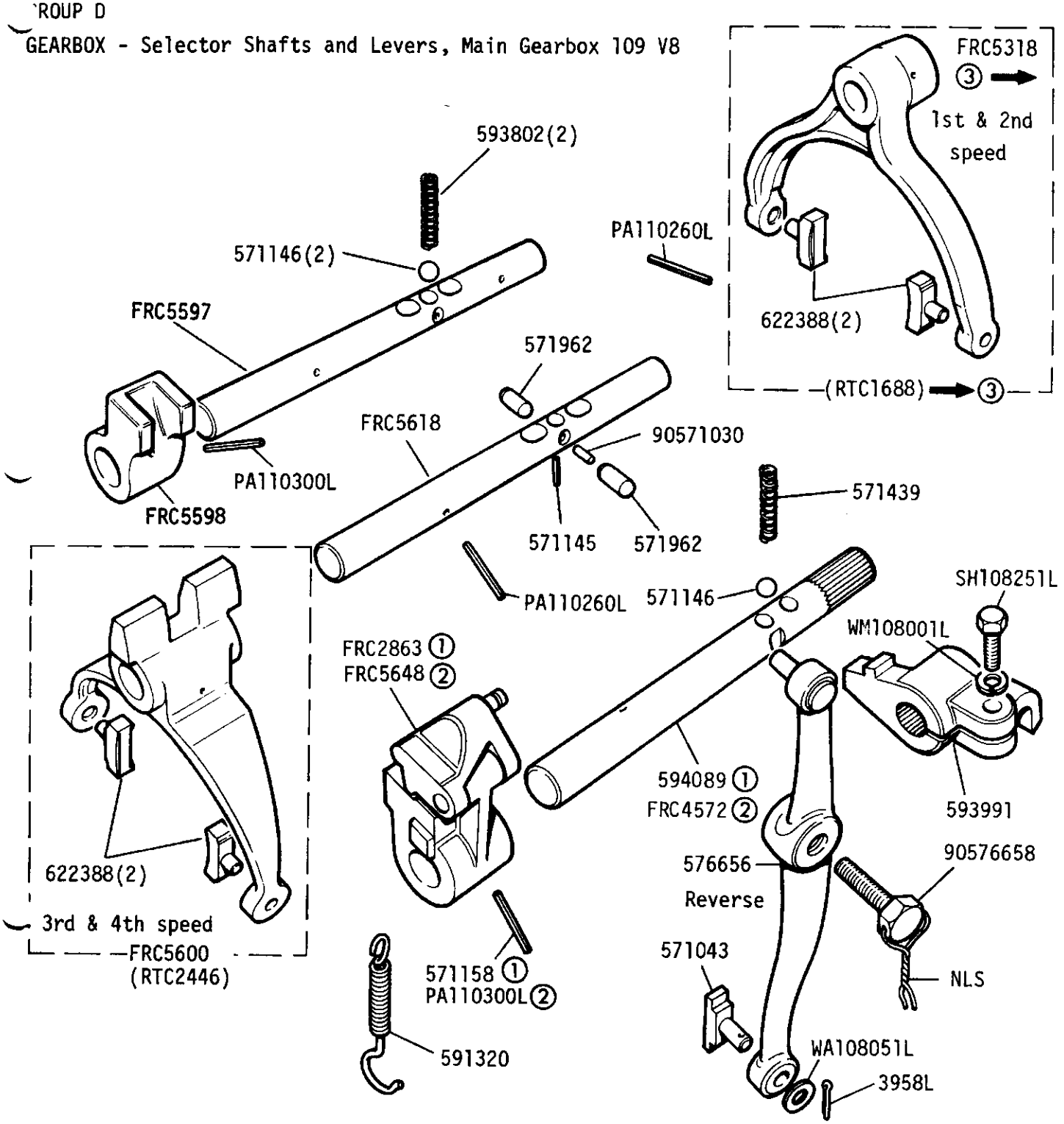

① Up to Gearbox Number 88104554A

② From Gearbox Number 88104555A onwards

③ FROM GEARBOX NUMBER 88108316

GROUP D
GEARBOX - Vacuum Control Valve 109 V8

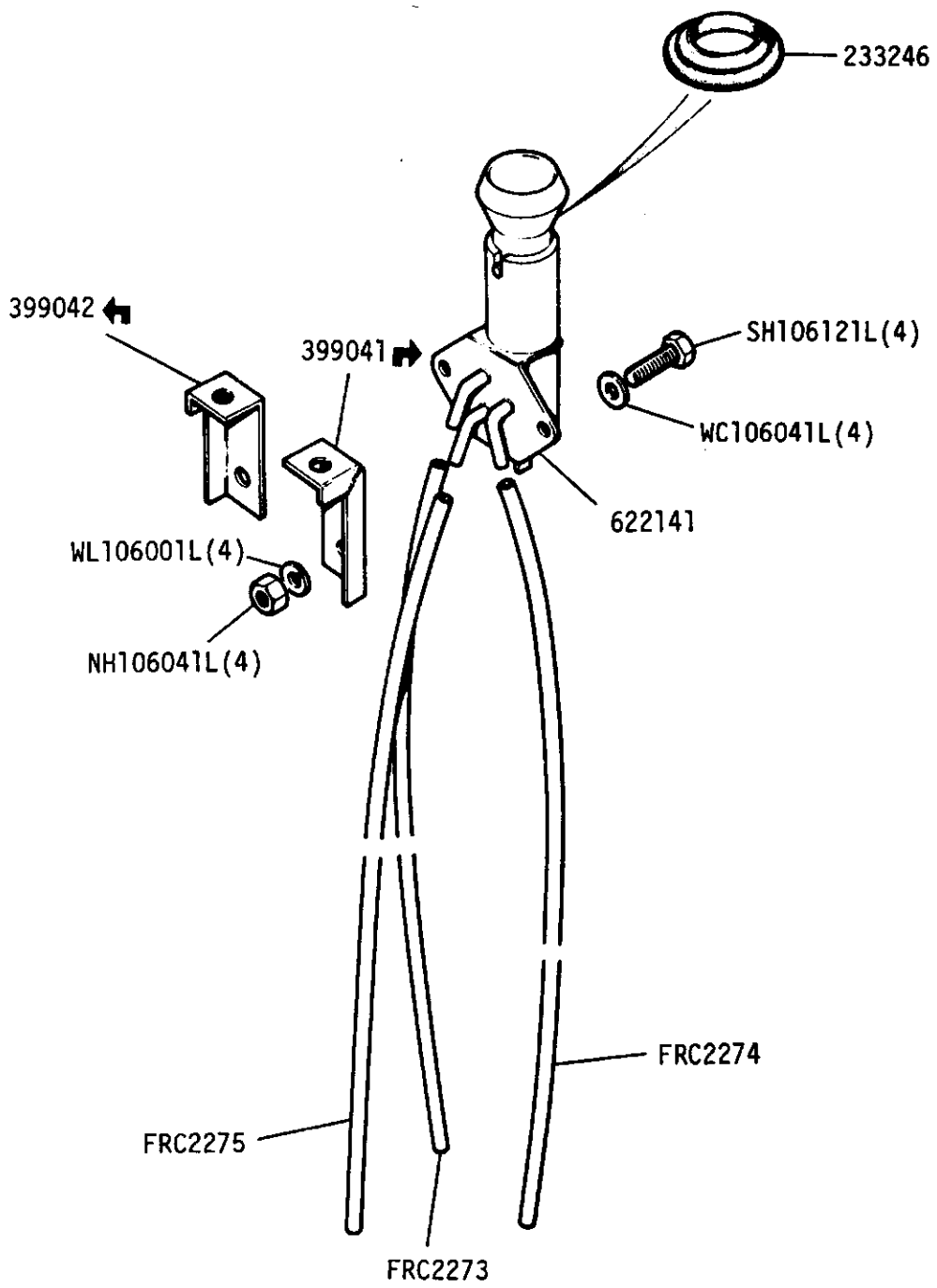

All items on this frame are not part of gearbox assembly

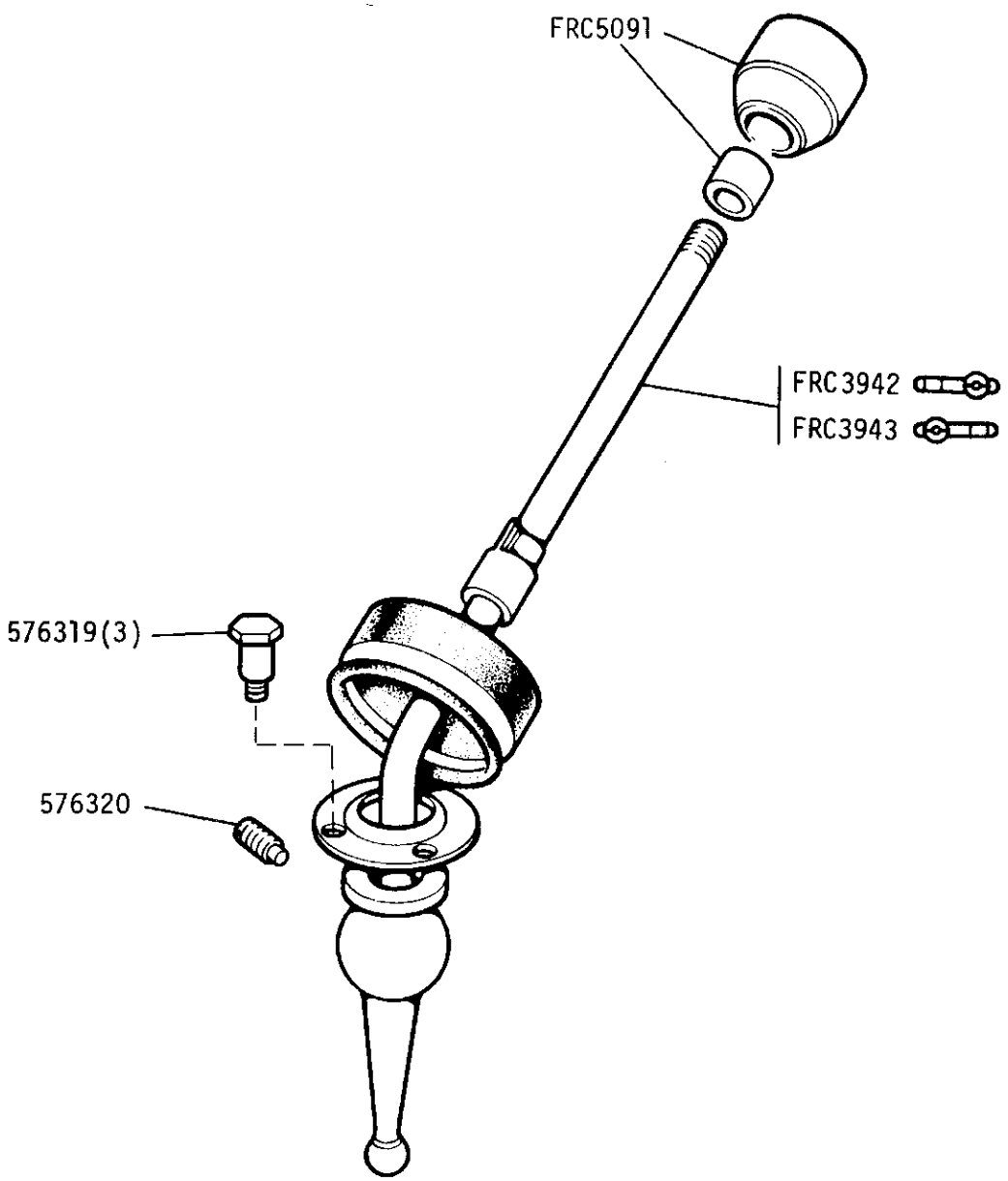

All items on this frame are not part of gearbox assembly

GROUP D
GEARBOX GASKET KIT 109 V8

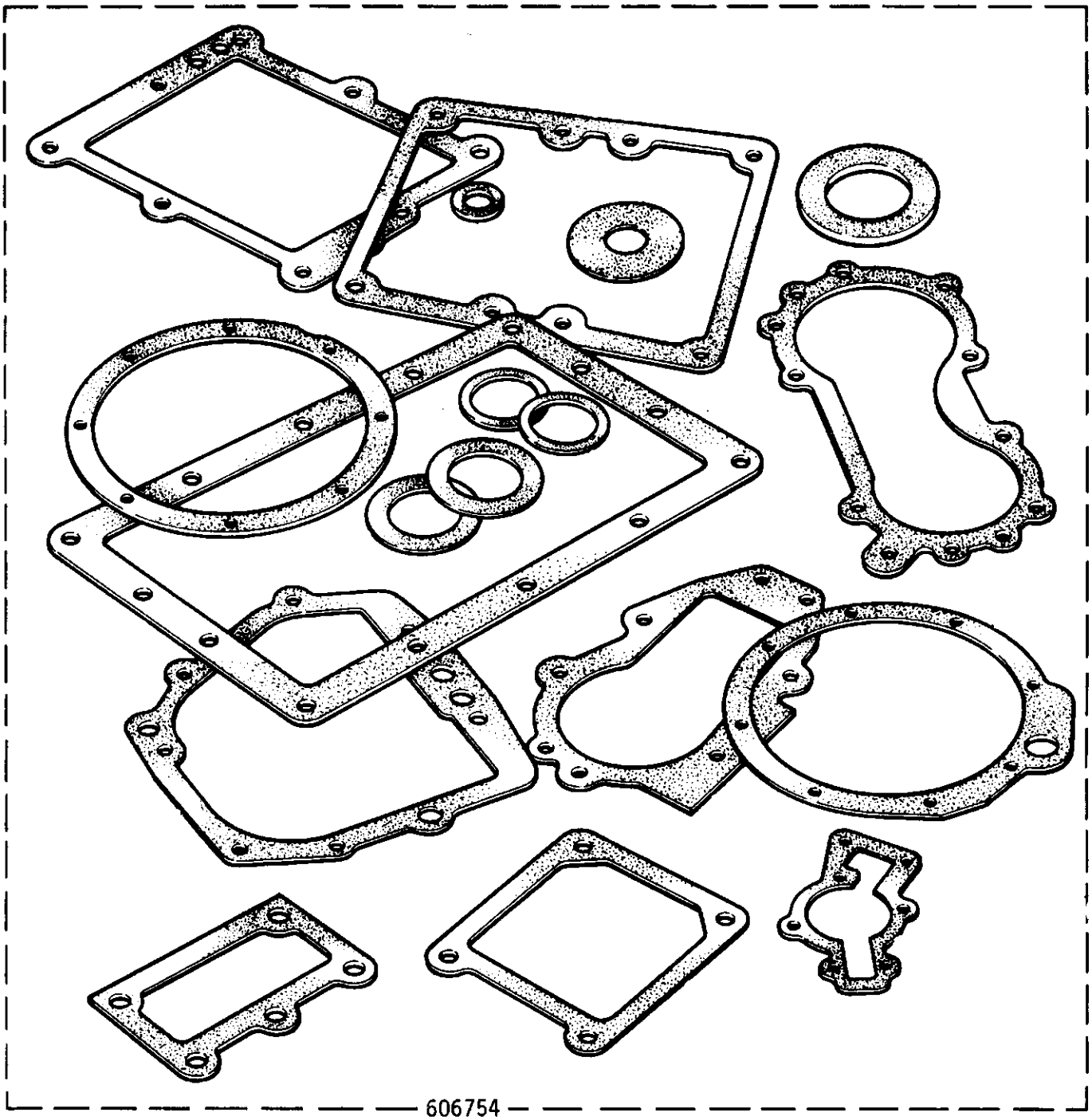

606754

GROUP E

AXLES - Front Axle and Propellor Shaft
Except 109in 1 Ton

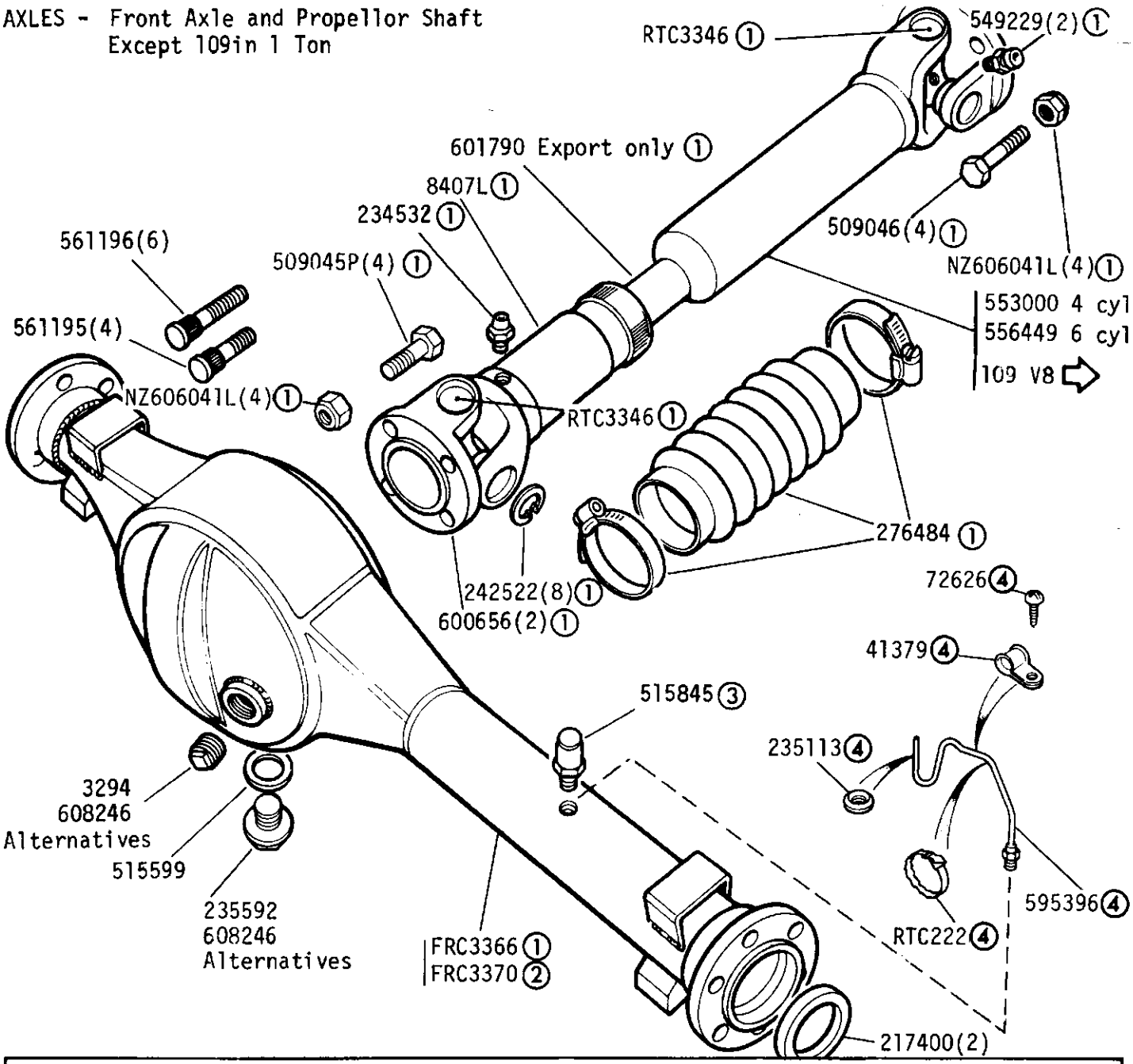

Front axle assembly FRC4396	88	① Except 109 V8
Front axle assembly FRC4397	88	② 109 V8
Front axle assembly FRC4396	109 4 Cyl	③ Fitted upto Vehicle 14269
Front axle assembly FRC4397	109 4 Cyl	④ Fitted from Vehicle 14270 onwards
Front axle assembly FRC3396	109 6 Cyl	
Front axle assembly FRC3387	109 6 Cyl	
Front axle assembly FRC4406	109 V8	
Front axle assembly FRC4407	109 V8	

Front axle assemblies include differential, brakes, universal joints, front hubs and steering track rod

GROUP E
AXLE - Front Casing 109 in 1 Ton - Salisbury Axle
Up to August 1974

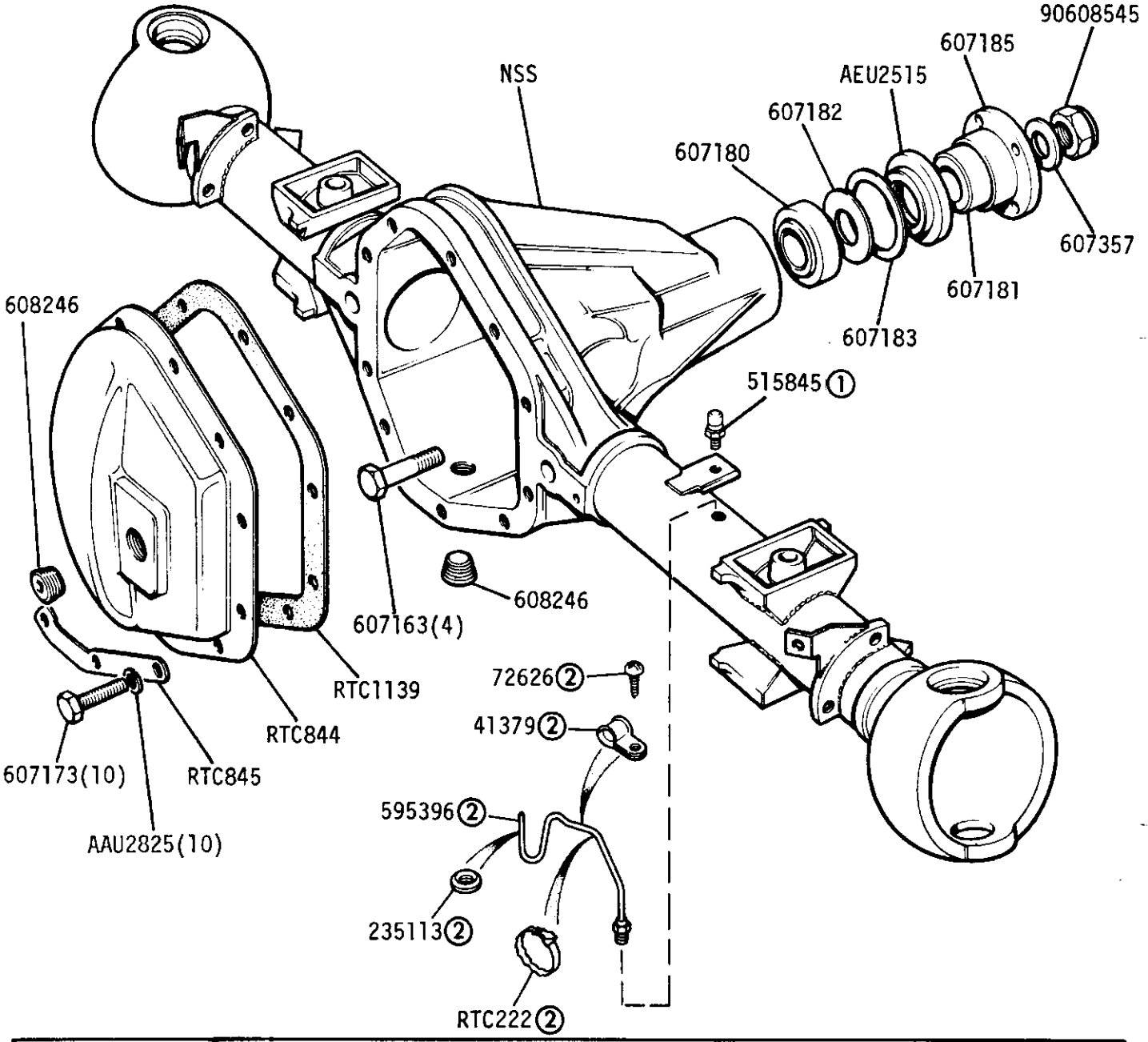

Front axle assembly FRC3398
Front axle assembly FRC3399
Front axle assembly less hubs, brake units and axle shafts 594312
⇨ adjacent frame for Rover Axle and Front Propeller Shaft

① Fitted upto Vehicle 14269
② Fitted from Vehicle 14270 onwards

GROUP E

AXLES - Front Axle and Propellor Shaft 109in 1 Ton - Rover Axle
From September 1974 onwards

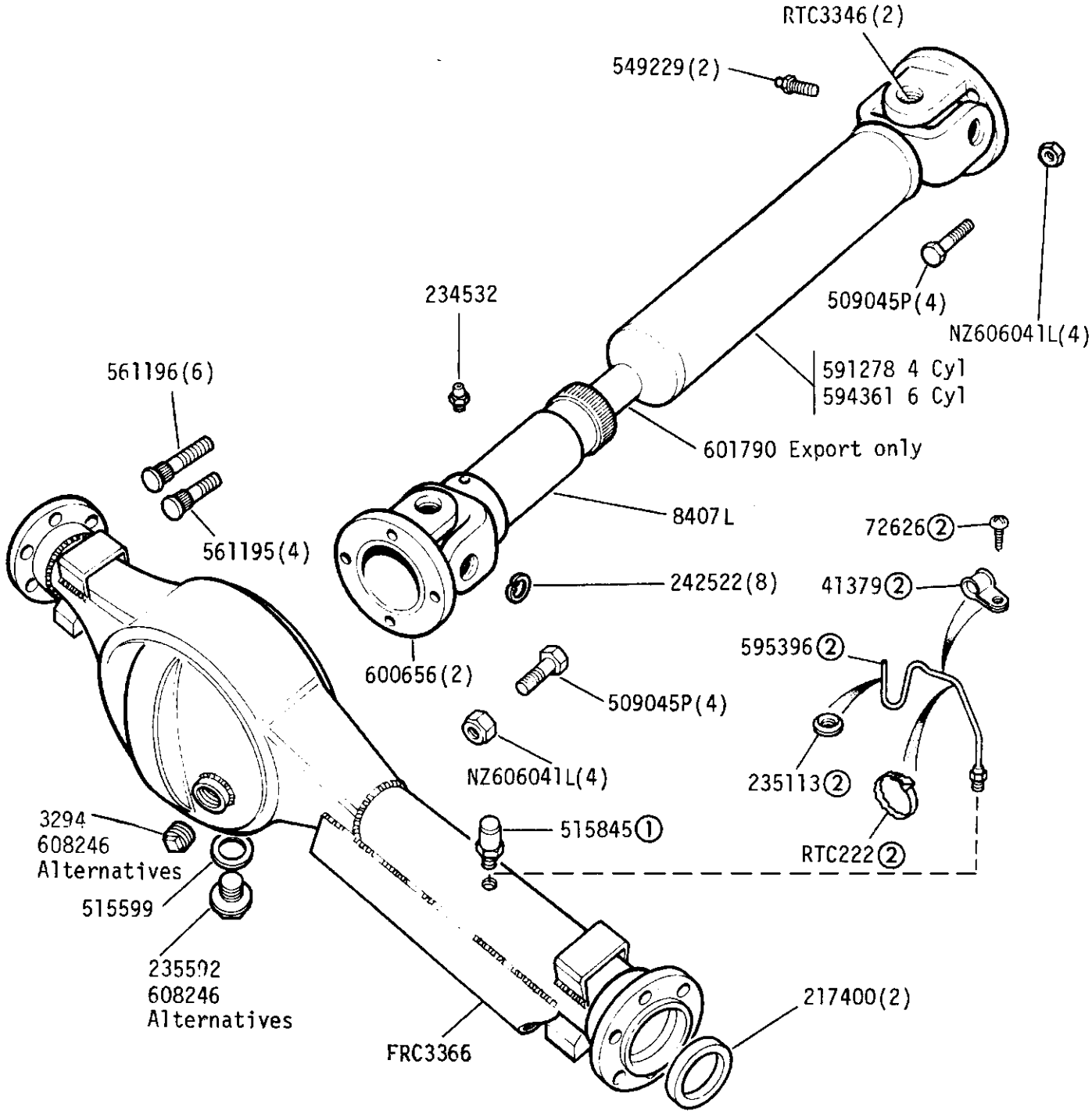

Front axle assembly FRC3398
Front axle assembly FRC3399

Front axle assemblies include differential, brakes, universal joints, front hubs, and steering track rod

⇦ adjacent frame for Salisbury Axle

① Fitted upto Vehicle 14269
② Fitted from Vehicle 14270 onwards

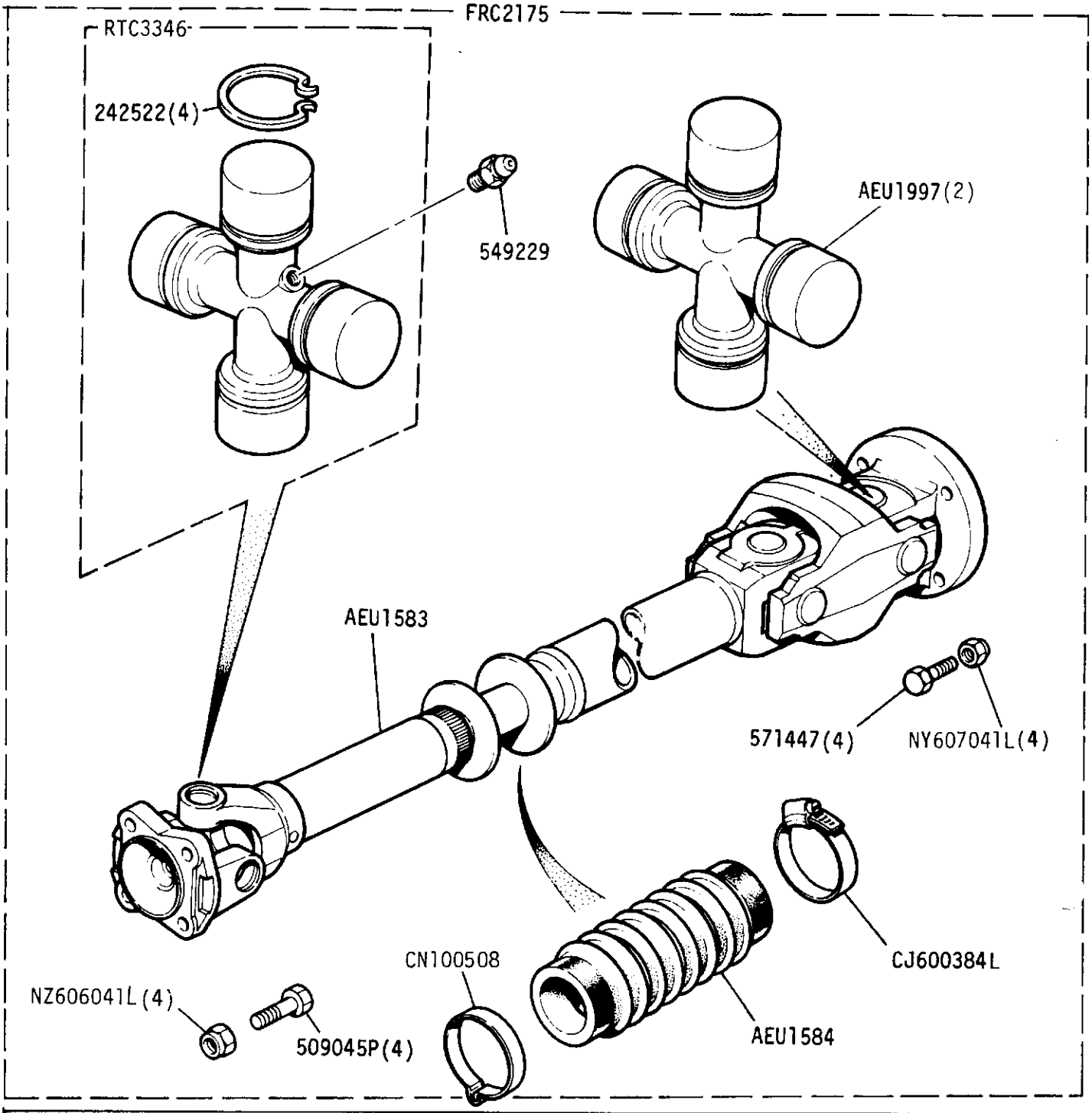

Centreing device kit for double joint AEU1998

GROUP E

AXLES - Swivel Pin Bearing Housing and Half Shaft - Except 109V8

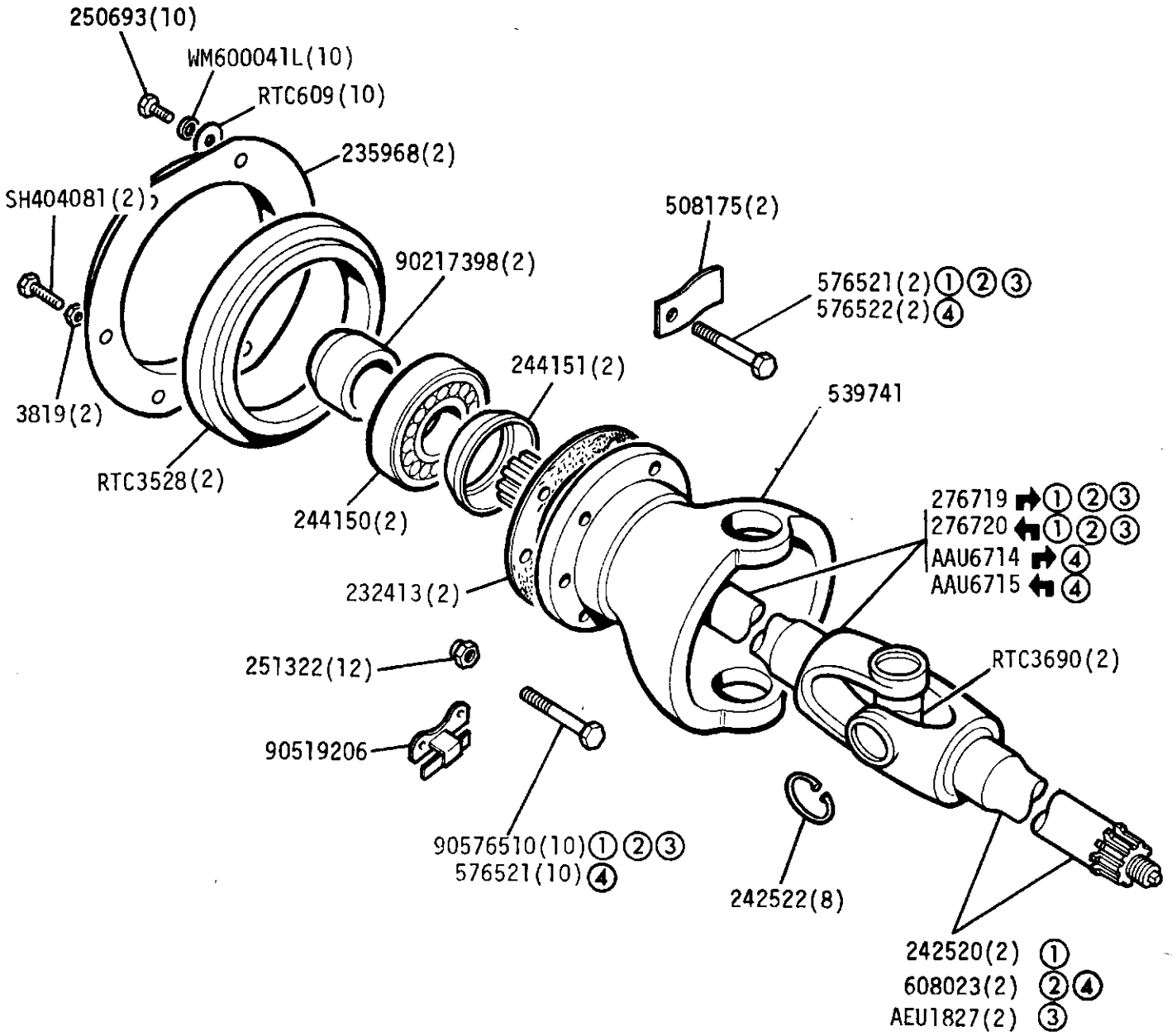

①	88in up to June 1980	Halfshaft complete	269265
		Halfshaft complete	269266
②	88in from July to September 1980	Halfshaft complete	576777
	109in except 1 Ton to September 1980	Halfshaft complete	576778
③	88in and 109in except 1 Ton	Halfshaft complete	FRC3906
	From October 1980 onwards	Halfshaft complete	FRC3907
④	109in 1 Ton	Halfshaft complete	594322
		Halfshaft complete	594323

AXLES - Swivel pin bearing housing and halfshaft - 109V8

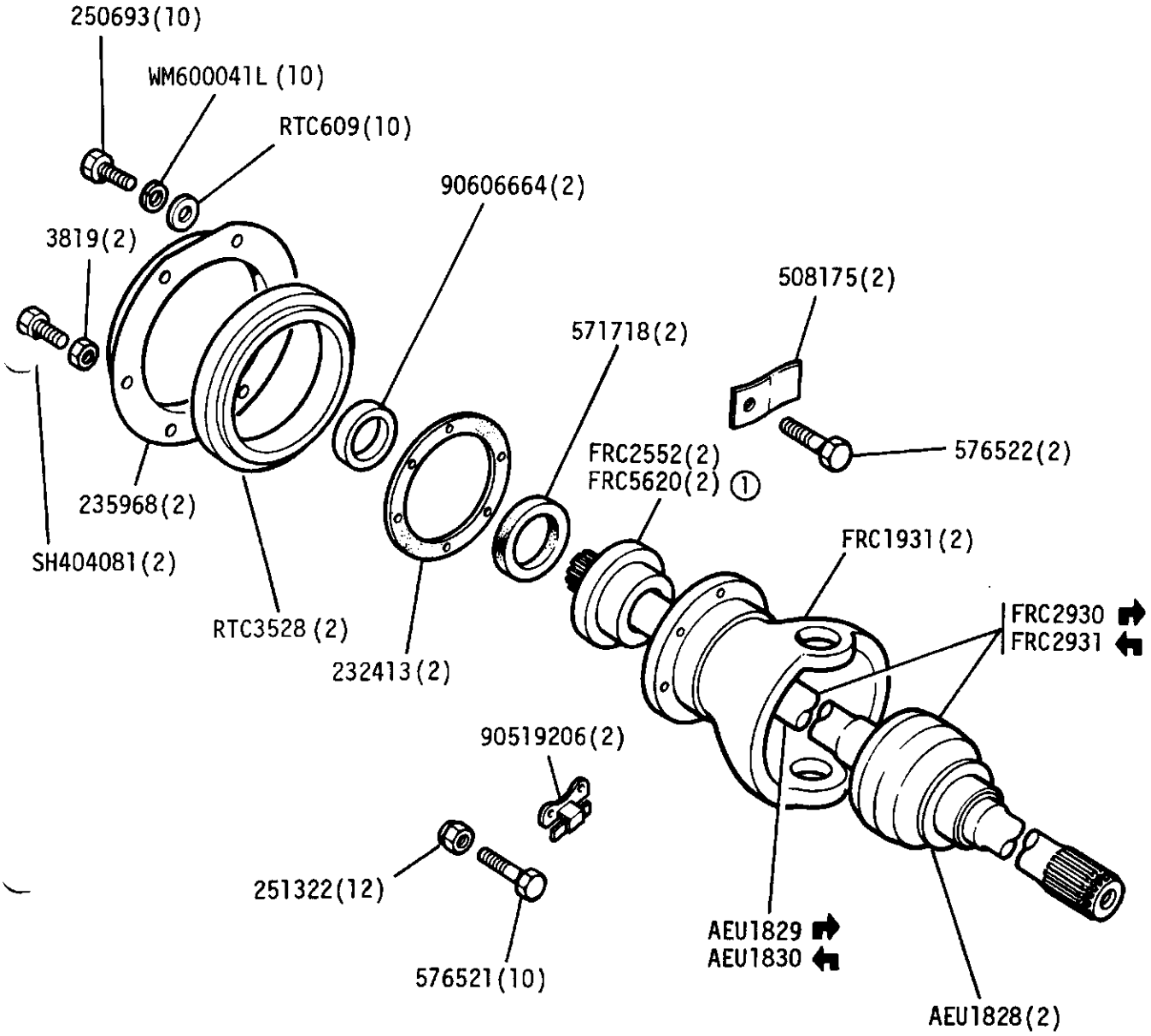

① 109 V8 Armoured car

GROUP E
AXLES - Swivel Pin Housing

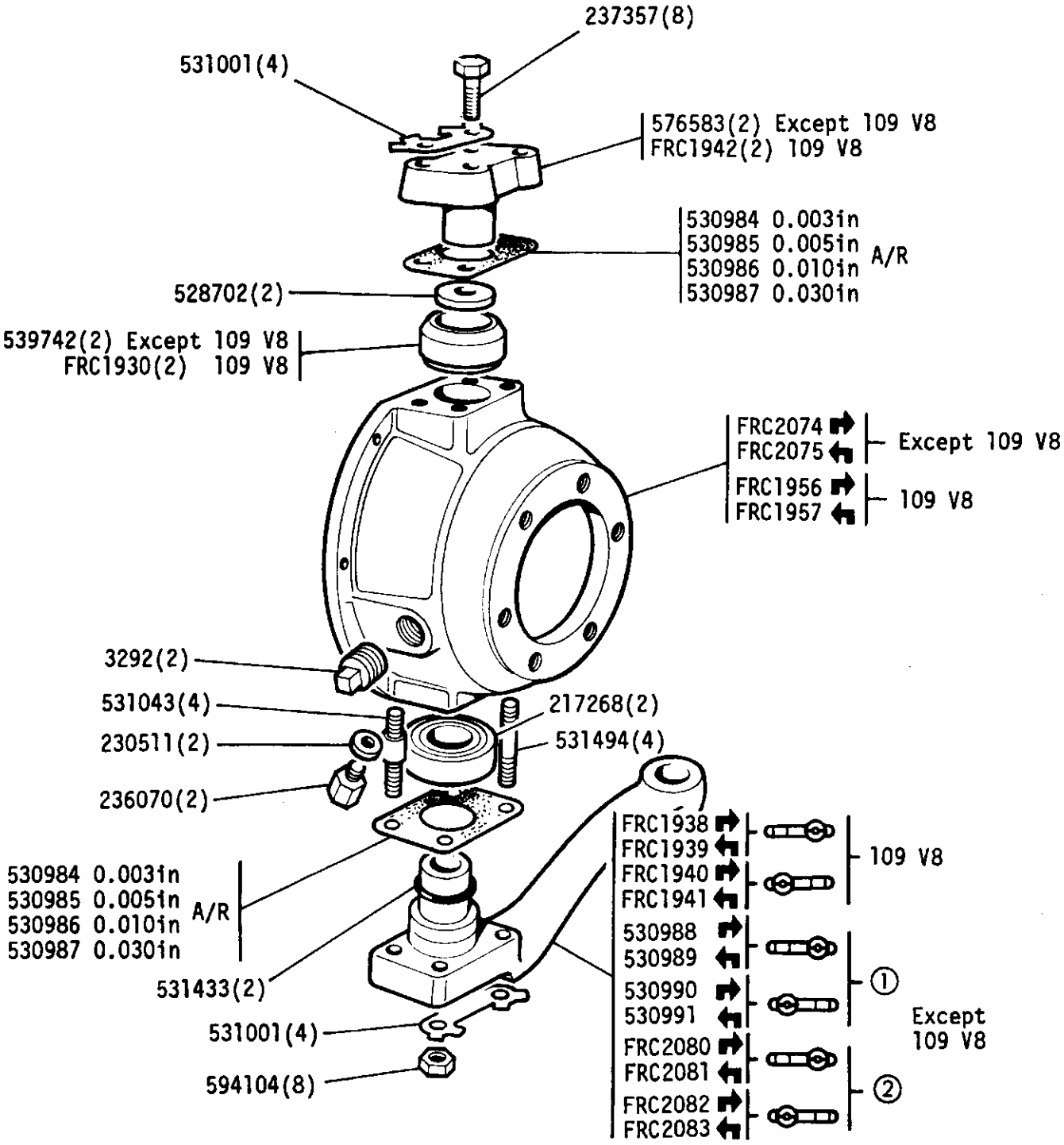

① Early Models
② Late Models
All items on this frame are also applicable to 109 1 Ton models

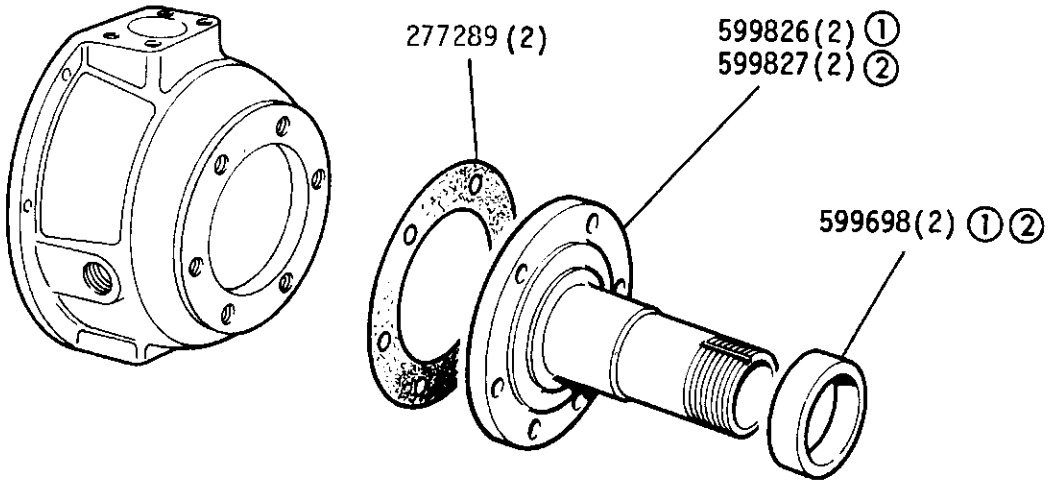

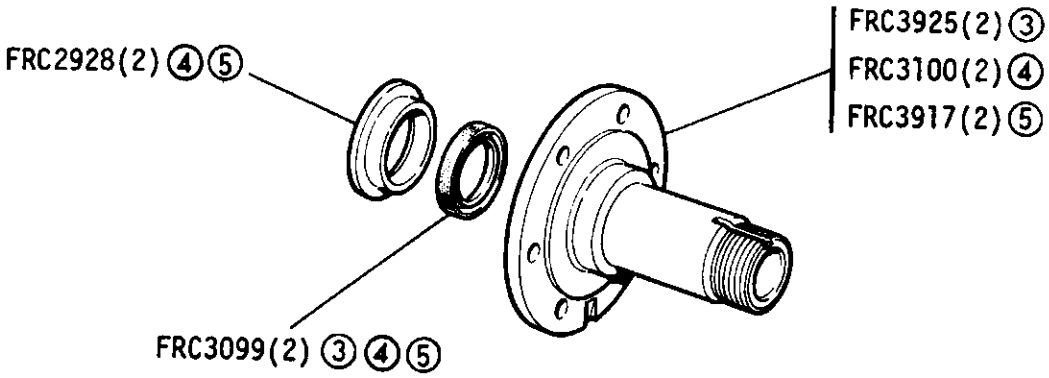

① 88 up to June 1980

② 109 up to Sept 1980
also 88 from July to Sept 1980

③ 88 and 109 from Oct 1980

④ 109 V8 up to Sept 1980

⑤ 109 V8 from Oct 1980

GROUP E
AXLES - Differential Housing 88in - Front and Rear
109in - Front, except 109in 1 Ton

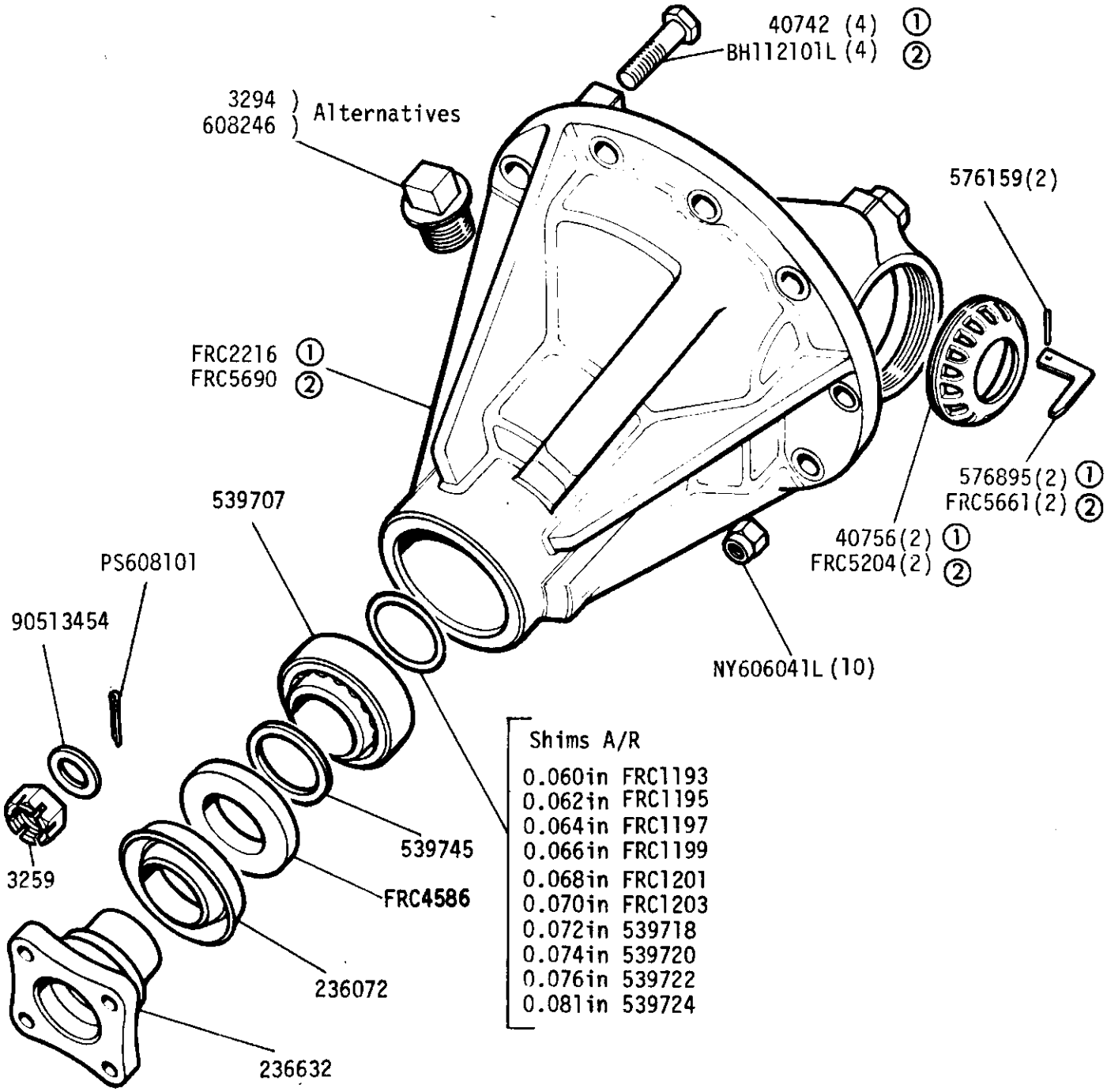

①	88 and 109	Front Axles	- Suffix 'C' to 'G'
	88	Rear Axle	- Suffix 'C' to 'F'
	109 V8	Front Axle	- Up to Suffix 'C'
②	88 and 109	Front Axles	- Suffix 'H' onwards
	88	Rear Axle	- Suffix 'G' onwards
	109 V8	Front Axle	- Suffix 'D' onwards

Differential Assembly
88in FRC7778 2 off
109in FRC7778 1 off
109in V8 FRC5688 1 off

GROUP E
AXLES - Front and Rear - Differential Crown Wheel and Pinion Except 109in 1 Ton

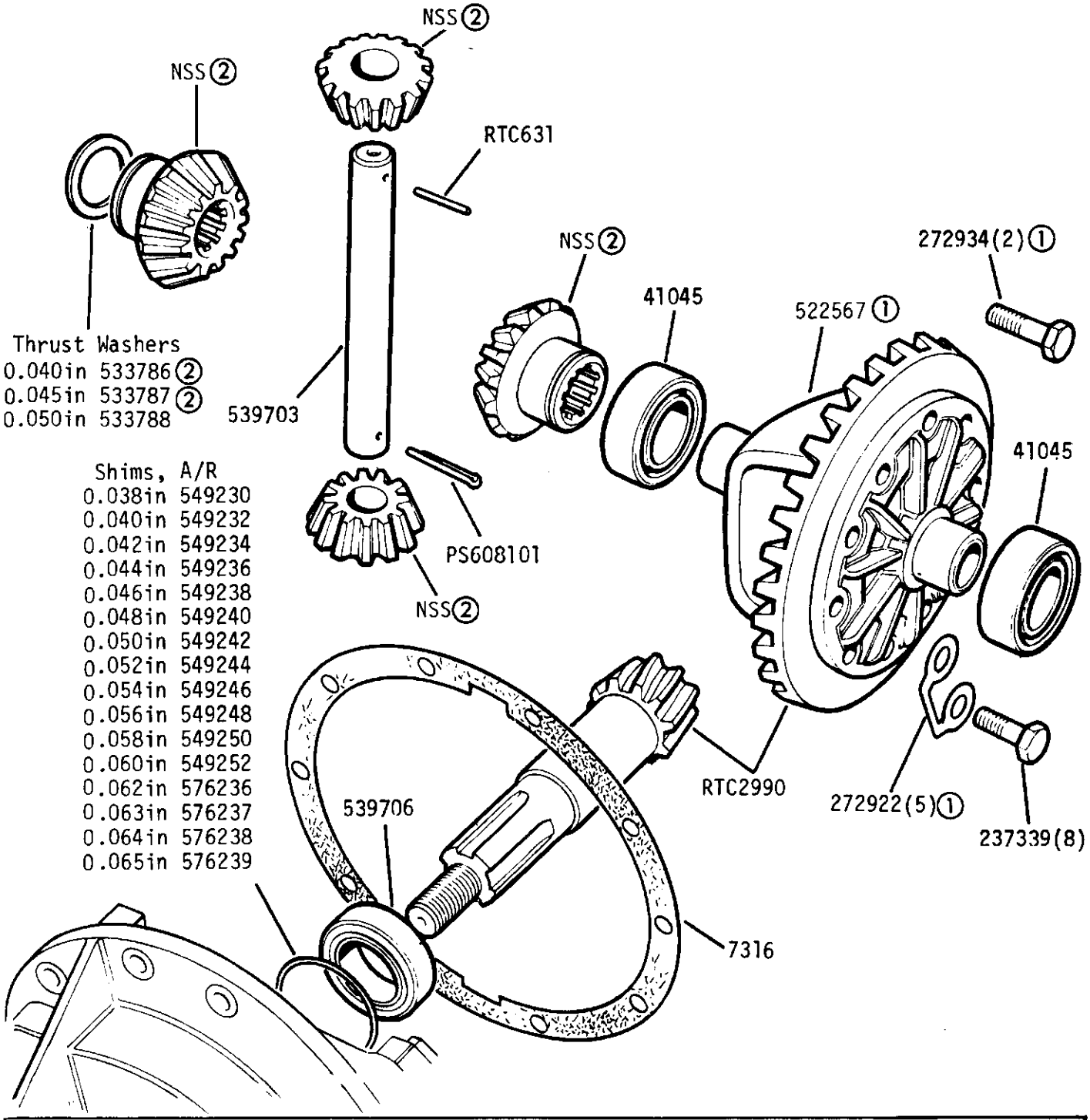

Quantities quoted are for one differential
109in Front, up to axle suffix 'B'
88in Front and rear up to axle suffix 'B'
Differential casing assembly 273441
①Part of differential casing assembly 273441
②Part of Differential Gear Kit :- RTC4489 (Matched Set)

GROUP E
AXLES - Differential Crown Wheel and Pinion
EXCEPT 109in 1 Ton

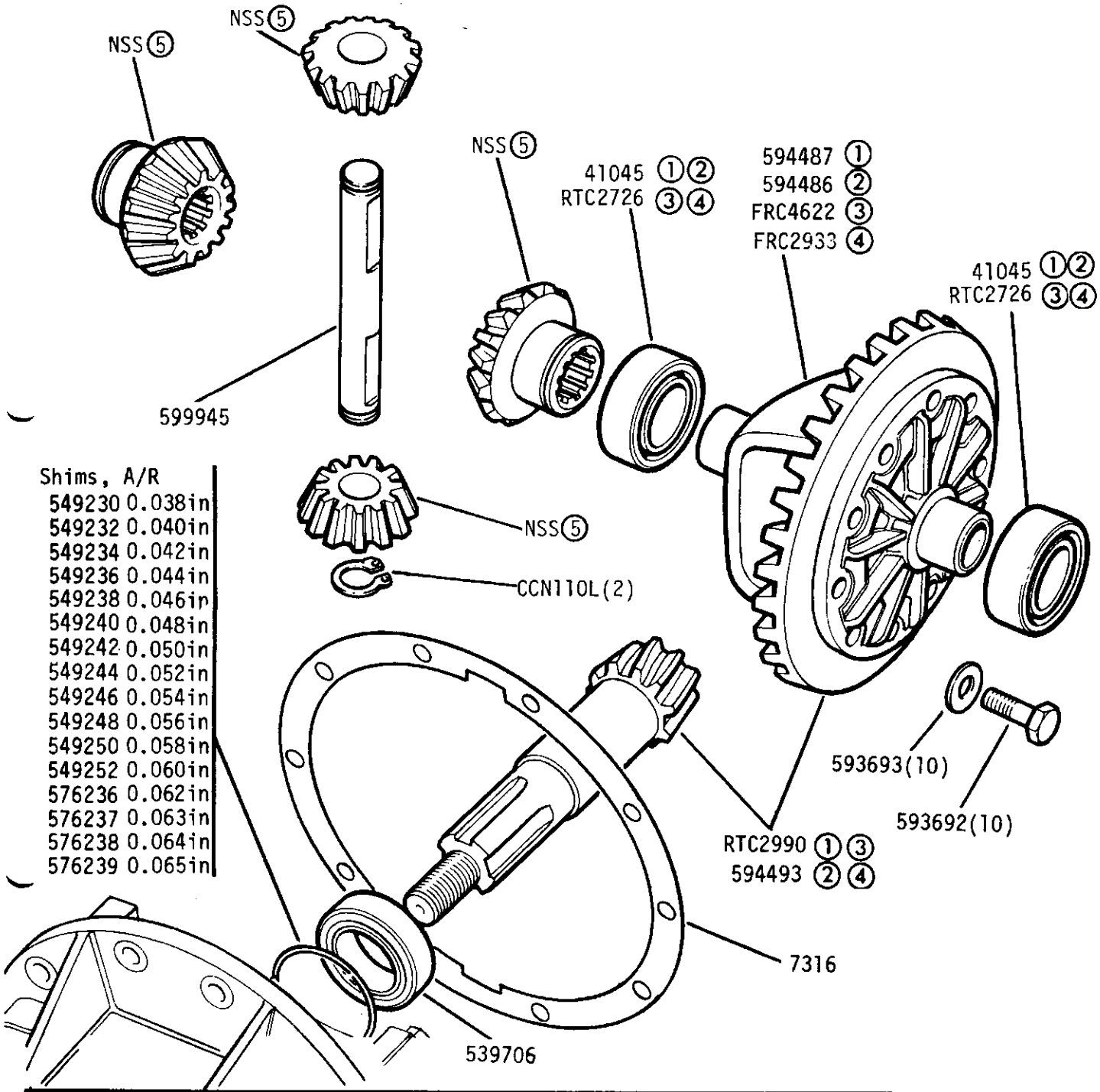

Shims, A/R	
549230	0.038in
549232	0.040in
549234	0.042in
549236	0.044in
549238	0.046in
549240	0.048in
549242	0.050in
549244	0.052in
549246	0.054in
549248	0.056in
549250	0.058in
549252	0.060in
576236	0.062in
576237	0.063in
576238	0.064in
576239	0.065in

Quantities quoted are for one differential

①	88 and 109	Front Axles	-	Suffix 'C' to 'G'
	88	Rear Axle	-	Suffix 'C' to 'F'
②	109 V8	Front Axle	-	Up to Suffix 'C'
③	88 and 109	Front Axles	-	Suffix 'H' onwards
	88	Rear Axle	-	Suffix 'G' onwards
④	109 V8	Front Axle	-	Suffix 'D' onwards

⑤ Part of Differential Gear Kit :- RTC4486 (Matched Set)

GROUP E

AXLES - Differential, Front Axle 109in 1 Ton

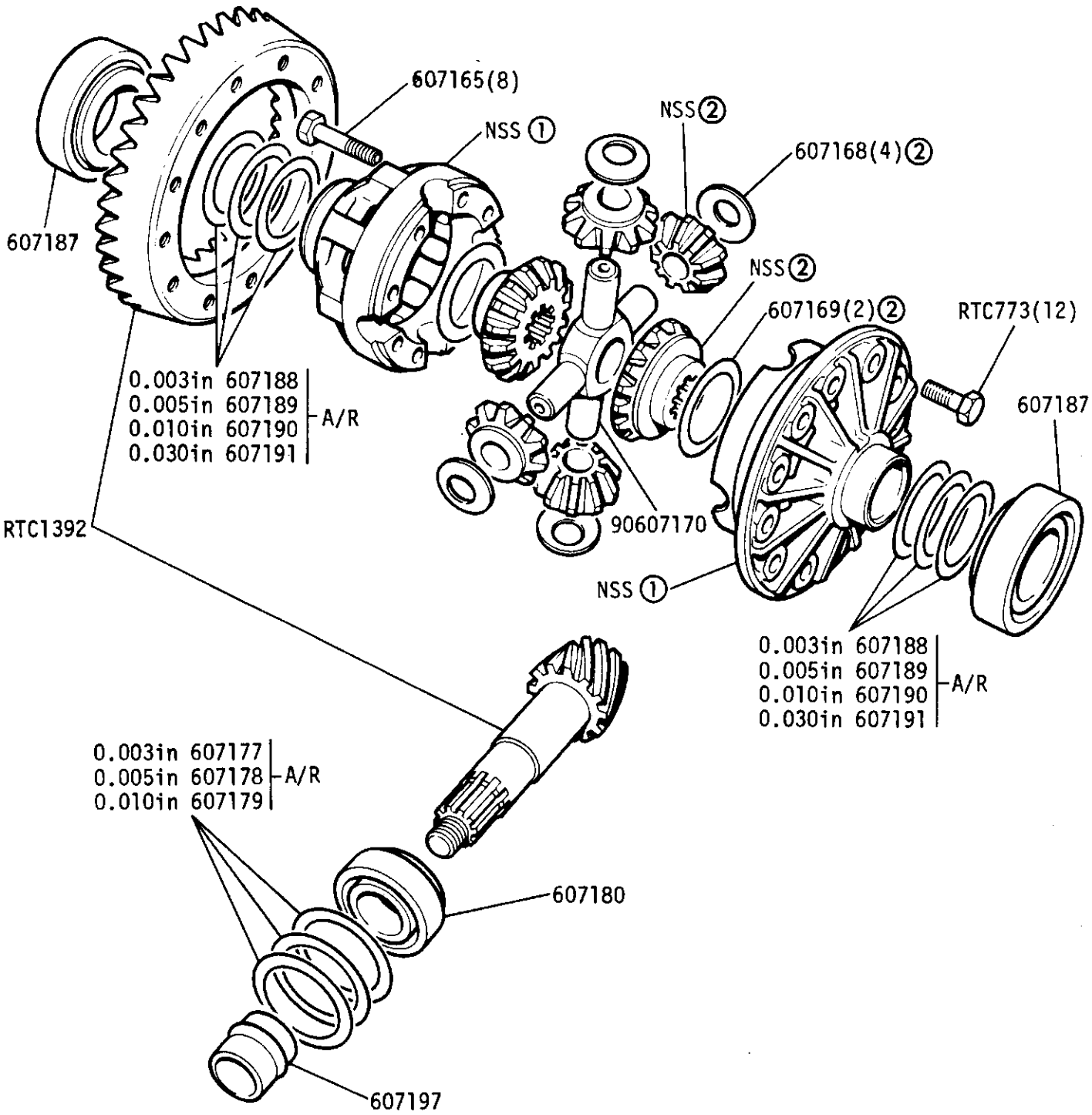

① Differential case less gears 607164

② Part of Differential Gear Kit :- RTC4488 (Matched Set)

GROUP E
AXLES - Front and Rear Hub Assemblies 88in
Up to June 1980

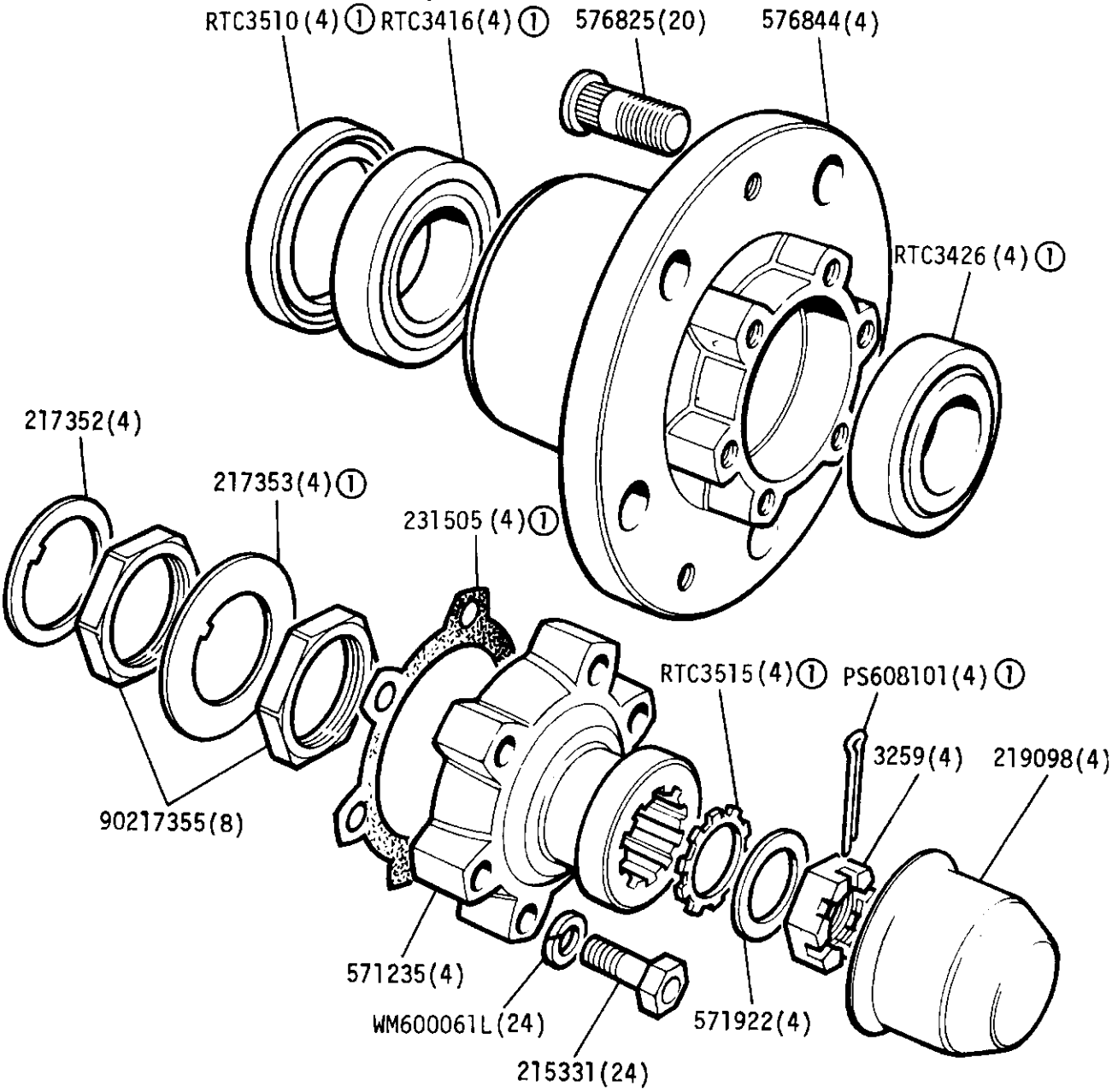

① Part of Hub bearing and oil seal Kit RTC3534

GROUP E

AXLES - Front Hub Assembly - 109in - Except 109V8
- 88in from July 1980

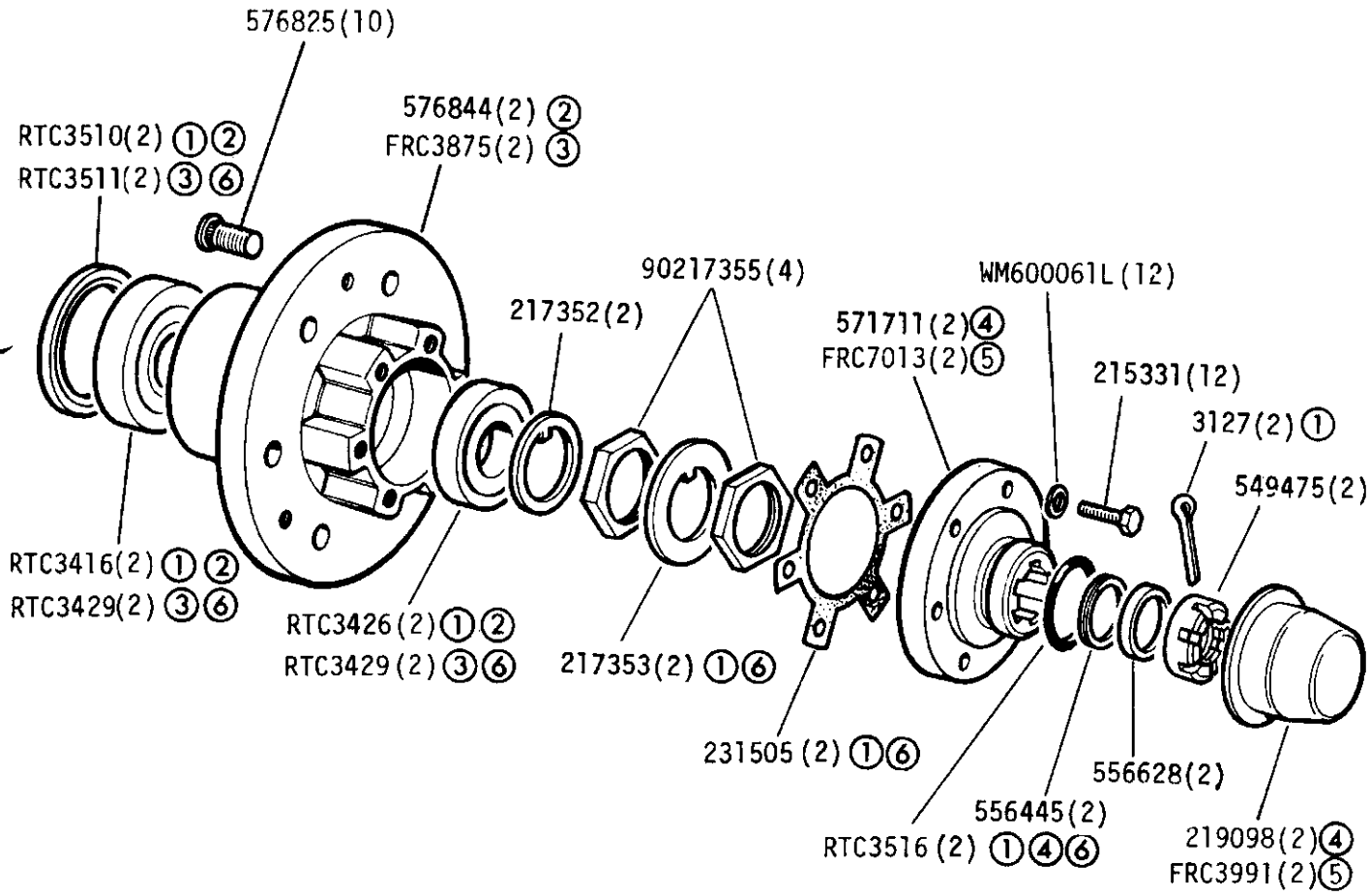

All items on this frame are also applicable to 109 1 Ton models

① Part of hub bearing and oil seal kit RTC3534

② Up to September 1980

③ From October 1980

④ Upto September 1983

⑤ From October 1983

⑥ Part of Hub Bearing and Oil Seal Kit - RTC3537

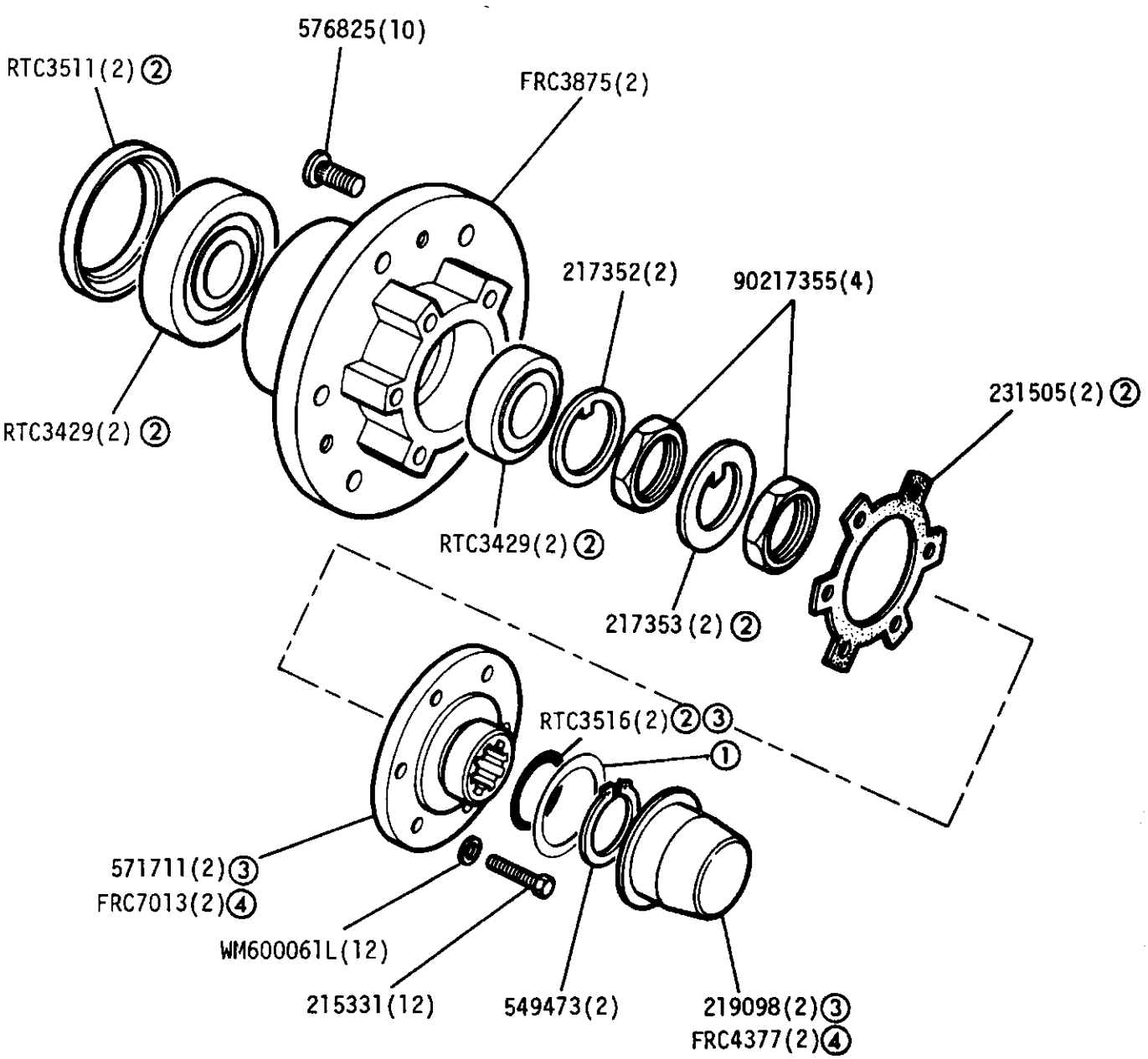

② Part of hub bearing and oil seal kit RTC3537
③ Upto September 1983
④ From October 1983

① Shim, as required, quantity 2

.044" FRC1990	.086" FRC1983
.050" FRC1977	.092" FRC1984
.056" FRC1978	.098" FRC1985
.062" FRC1979	.104" FRC1986
.068" FRC1980	.110" FRC1987
.074" FRC1981	.116" FRC1988
.080" FRC1982	.122 FRC1989

GROUP E
AXLE - Rear Casing and Half Shafts 88in

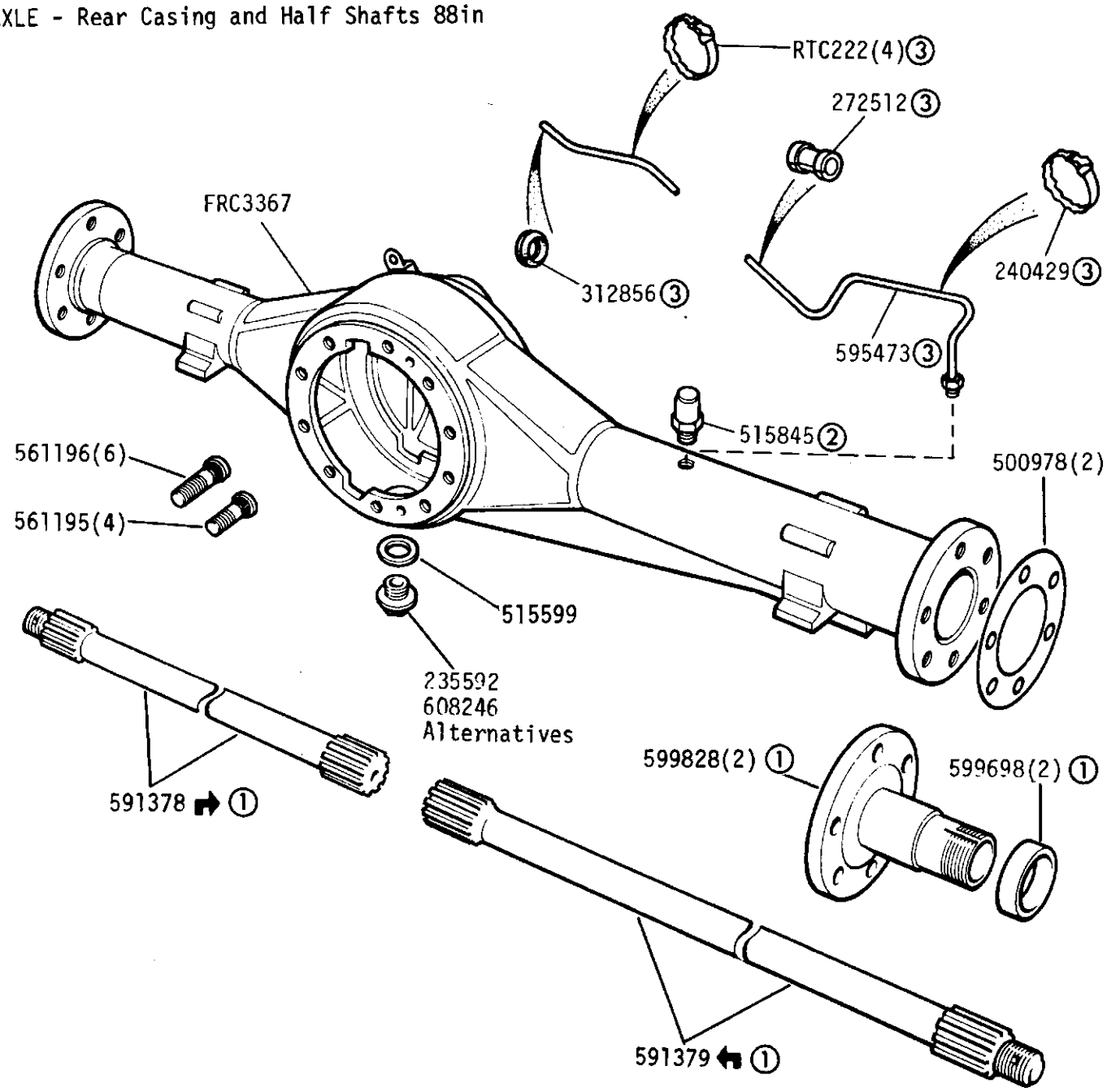

Rear axle assembly FRC7298

① Up to June 1980.
From July 1980 refer to Frame 1J 13

② Fitted upto Vehicle 14269
③ Fitted from Vehicle 14270 onwards

AXLE - Rear Casing 109in

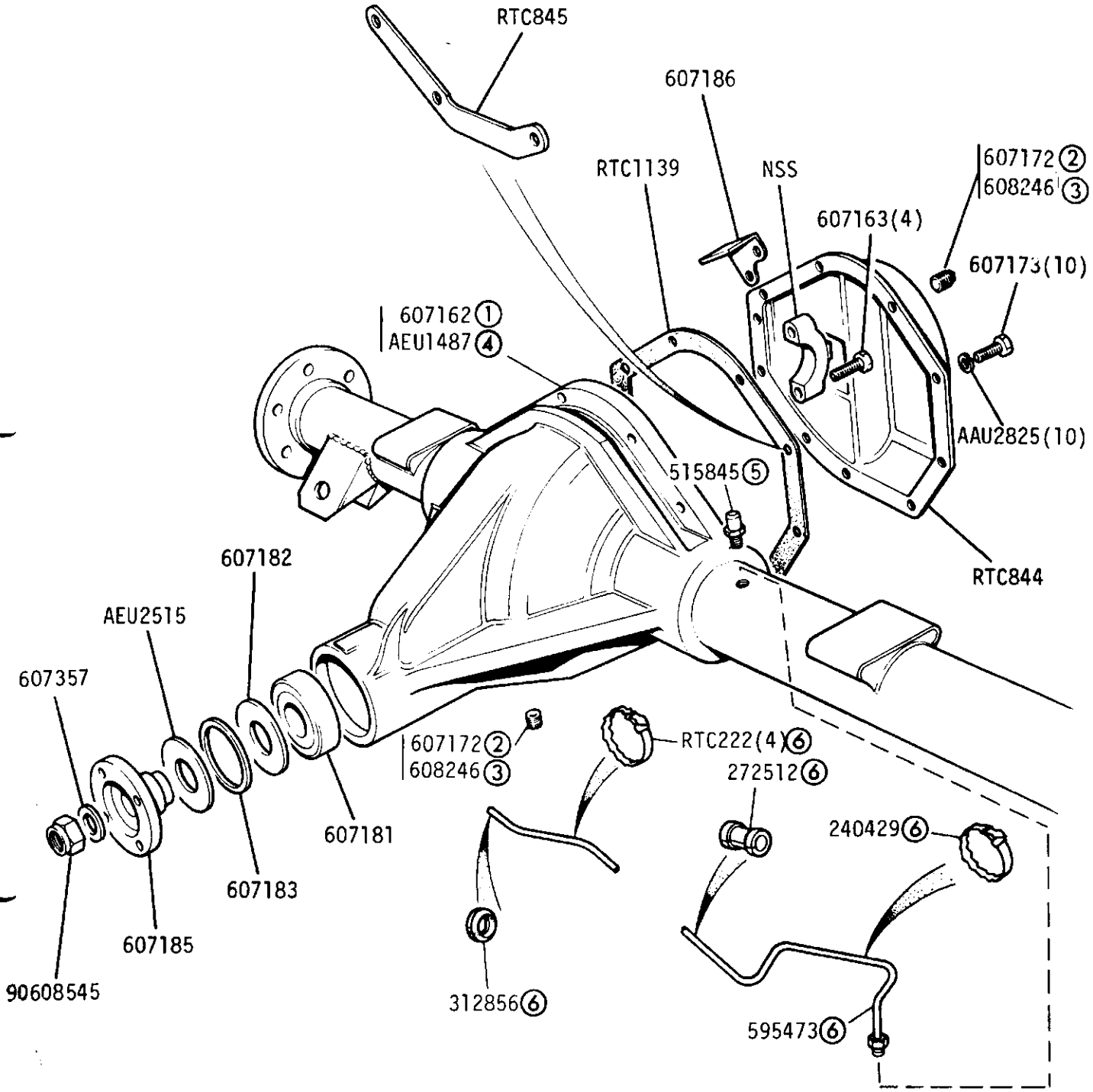

Rear axle assembly FRC4398 109 Except 109 V8 Rear axle assembly FRC4408 109 V8
Rear axle assembly FRC2137 109 1 Ton

Rear axle assembly less hubs, brake units and axle shafts 607247 109
Rear axle assembly less hubs, brake units and axle shafts 594349 109 1 Ton

① Except 1 Ton and V8

② Square head
③ Recessed head
Alternatives

④ 109 V8
⑤ Fitted upto Vehicle 14269
⑥ Fitted from Vehicle 14270 onwards

GROUP E

AXLES - Differential, Rear Axle 109in

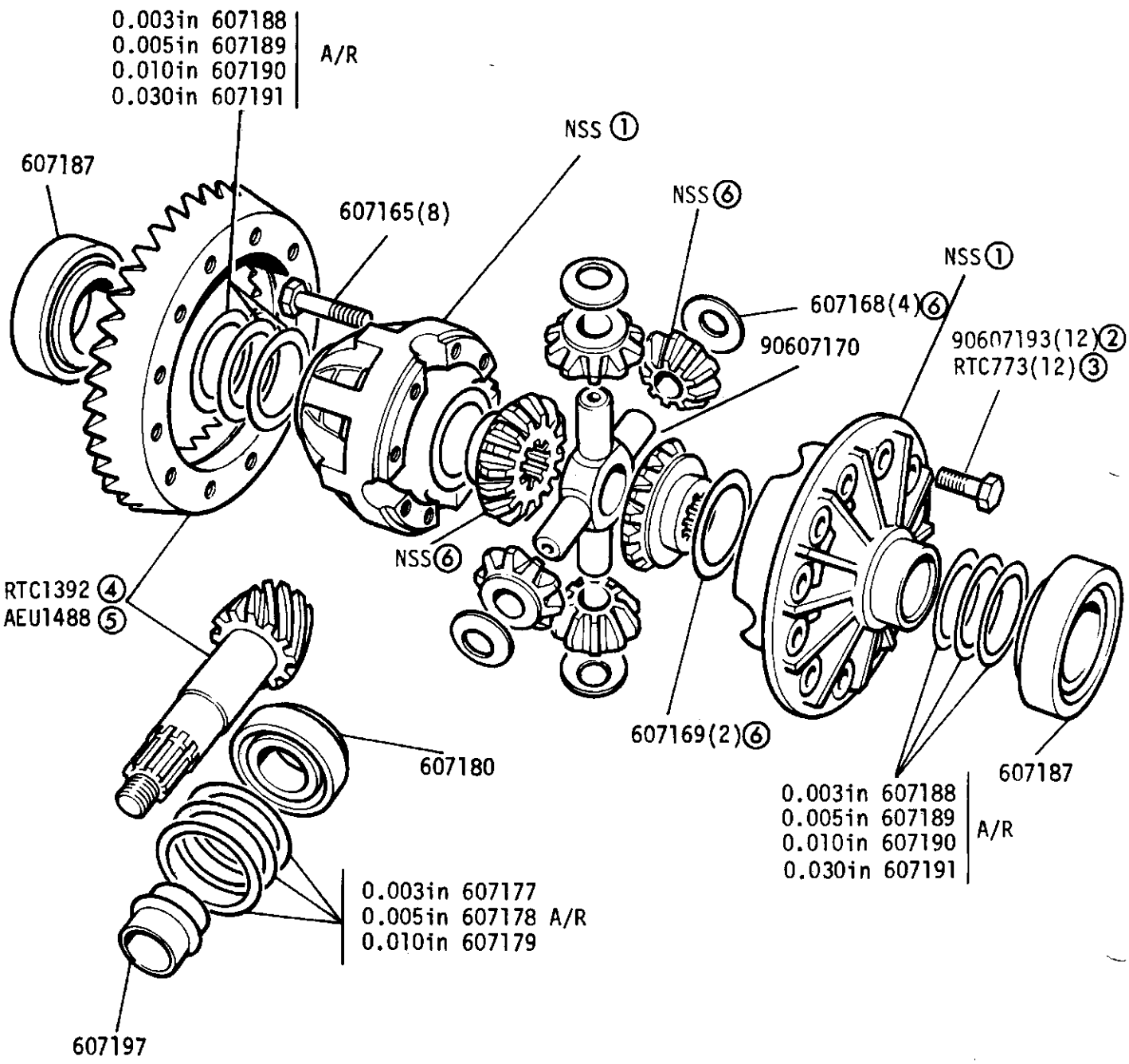

① Differential case less gears 607164 Except 109 V8
Differential case less gears AEU1489 109 V8

② Coarse thread

③ Fine thread

All items on this frame are also applicable to 109 1 Ton models

④ Except 109 V8

⑤ 109 V8

⑥ Part of Differential Gear Kit :- RTC4488 (Matched Set)

GROUP E

AXLES - Rear Hub and Axle Shaft - 109in All Models
88in from July 1980

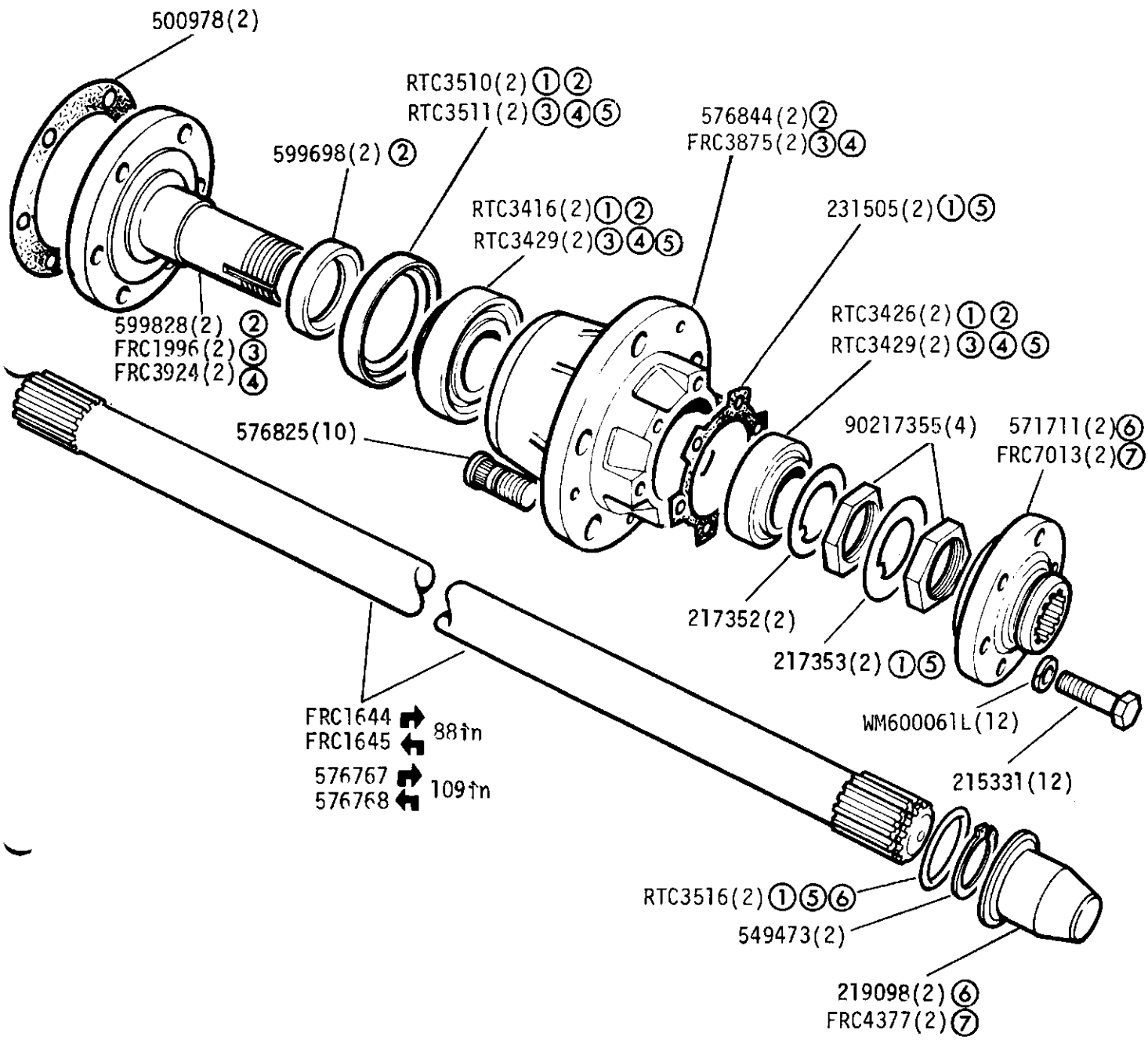

All items on this frame are also applicable to 109 1 Ton models

① Part of Hub bearing and oil seal kit RTC3534

② Except 109 V8 - Up to September 1980

③ 109 V8 - Up to September 1980

④ All models - From October 1980

⑤ Part of Hub bearing and oil seal kit RTC3537

⑥ Upto September 1983

⑦ From October 1983

GROUP E
PROPELLER SHAFT - Rear Except 109in 1 Ton

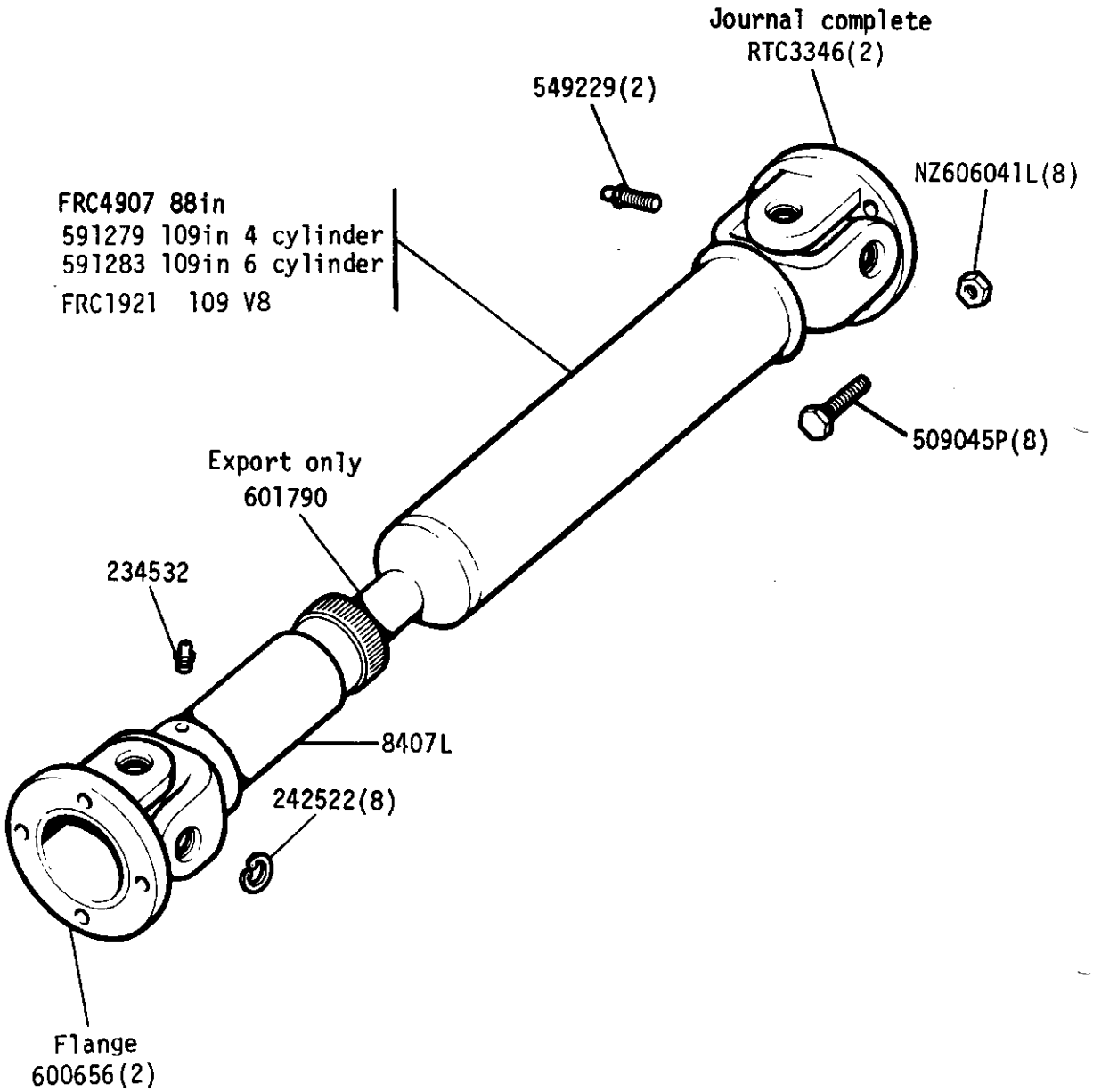

Sliding joint complete, less male spline AEU1582 109 V8

GROUP E

PROPELLER SHAFT - Rear 109 in 1 Ton

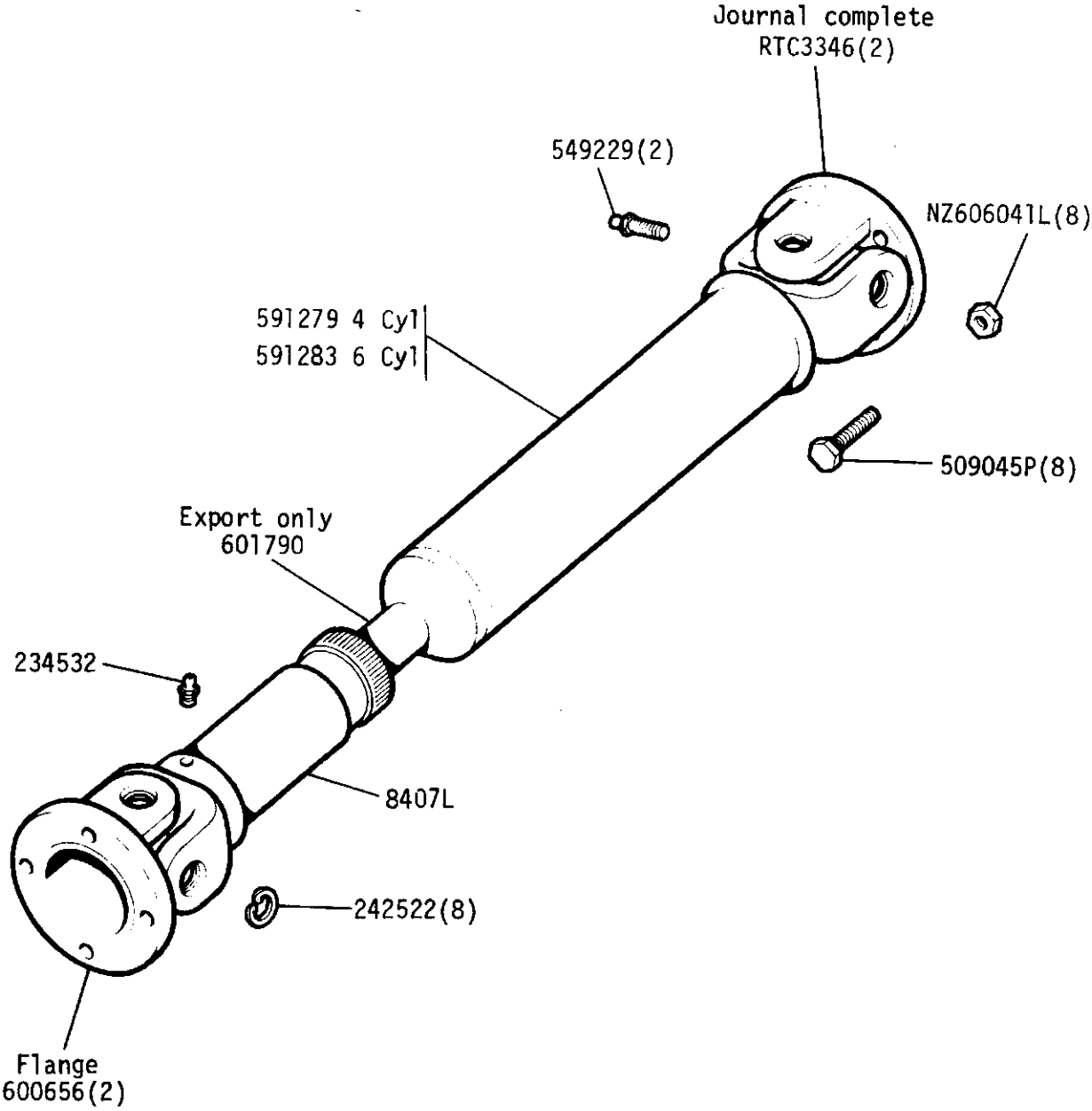

SUSPENSION - Front Road Springs - 88in 2¼ Litre Petrol

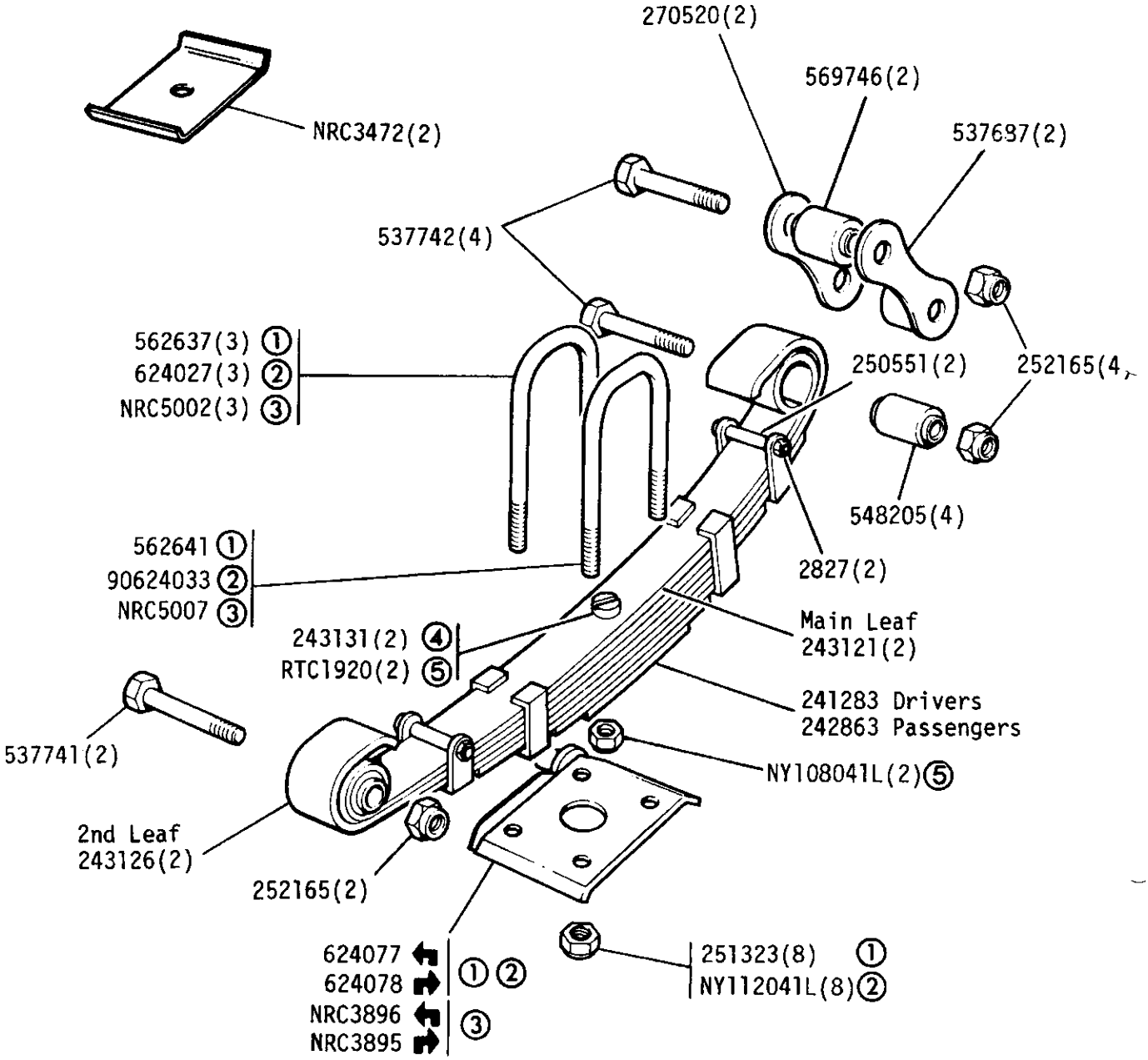

Part numbers of road springs are stamped on underside of 3rd or bottom leaf

① Up to axle suffix 'C' inclusive
② Axle suffix 'D'
③ Axle suffix 'E' onwards
④ UNF
⑤ Metric

GROUP E
SUSPENSION - Front Road Springs - 88" and 109" Diesel.
109" 4cyl, 6cyl and 109V8 Petrol - Except 109" 1 Ton.

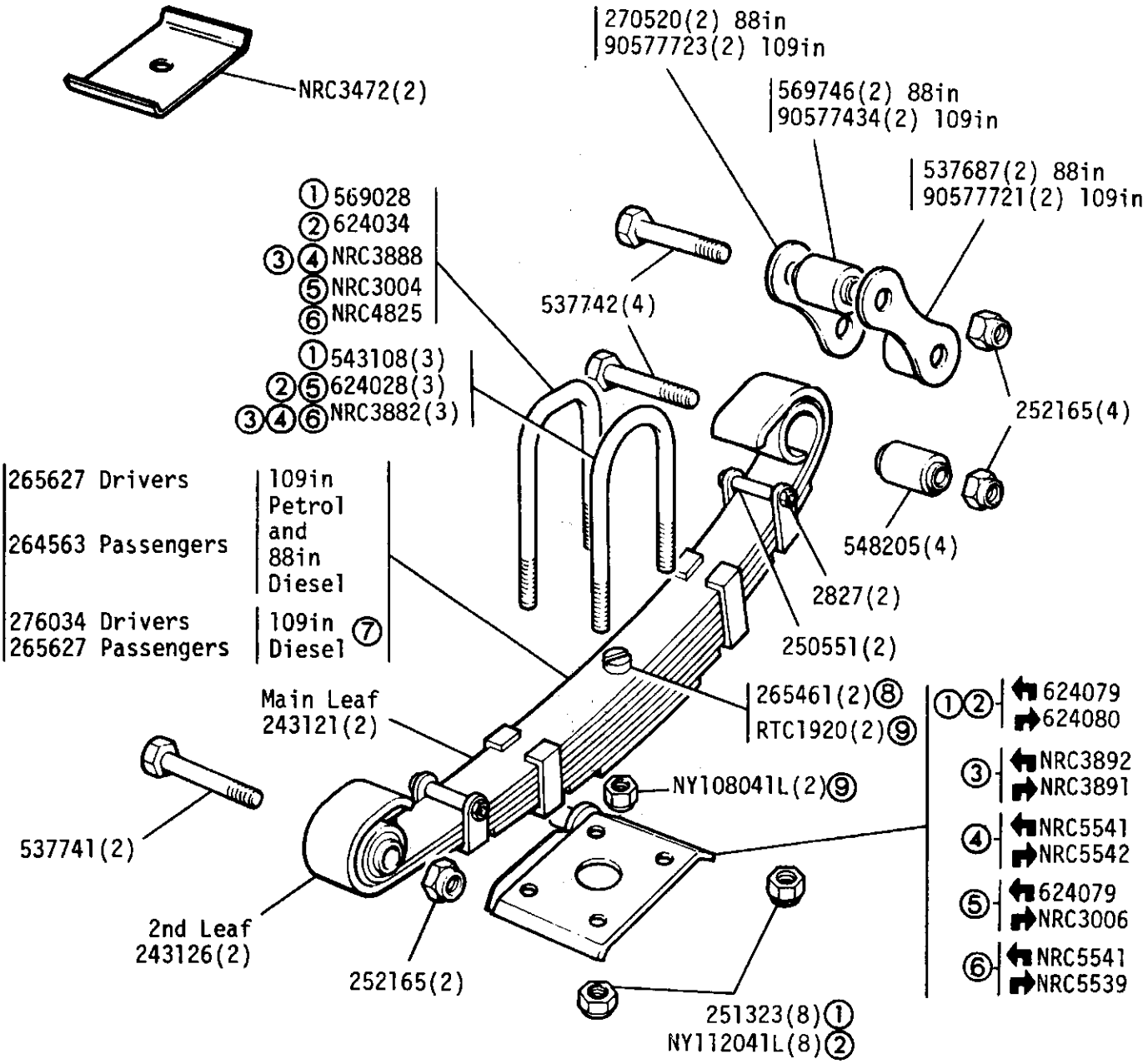

Part numbers of road springs are stamped on underside of 3rd or bottom leaf

① 88 and 109 up to Axle Suffix 'C' inclusive
② 88 and 109 Axle Suffix 'D'
③ 88 Axle Suffix 'E' onwards
④ 109 Axle Suffix 'E' onwards
⑤ 109 V8 up to Axle Suffix 'B'
⑥ 109 V8 Axle Suffix 'C' onwards
⑦ Also applicable to 109 Petrol 4 Cyl and 6 Cyl for Sweden
⑧ UNF
⑨ Metric

GROUP E
SUSPENSION - Front Road Springs 109" 4 and 6 cylinder 1 Ton

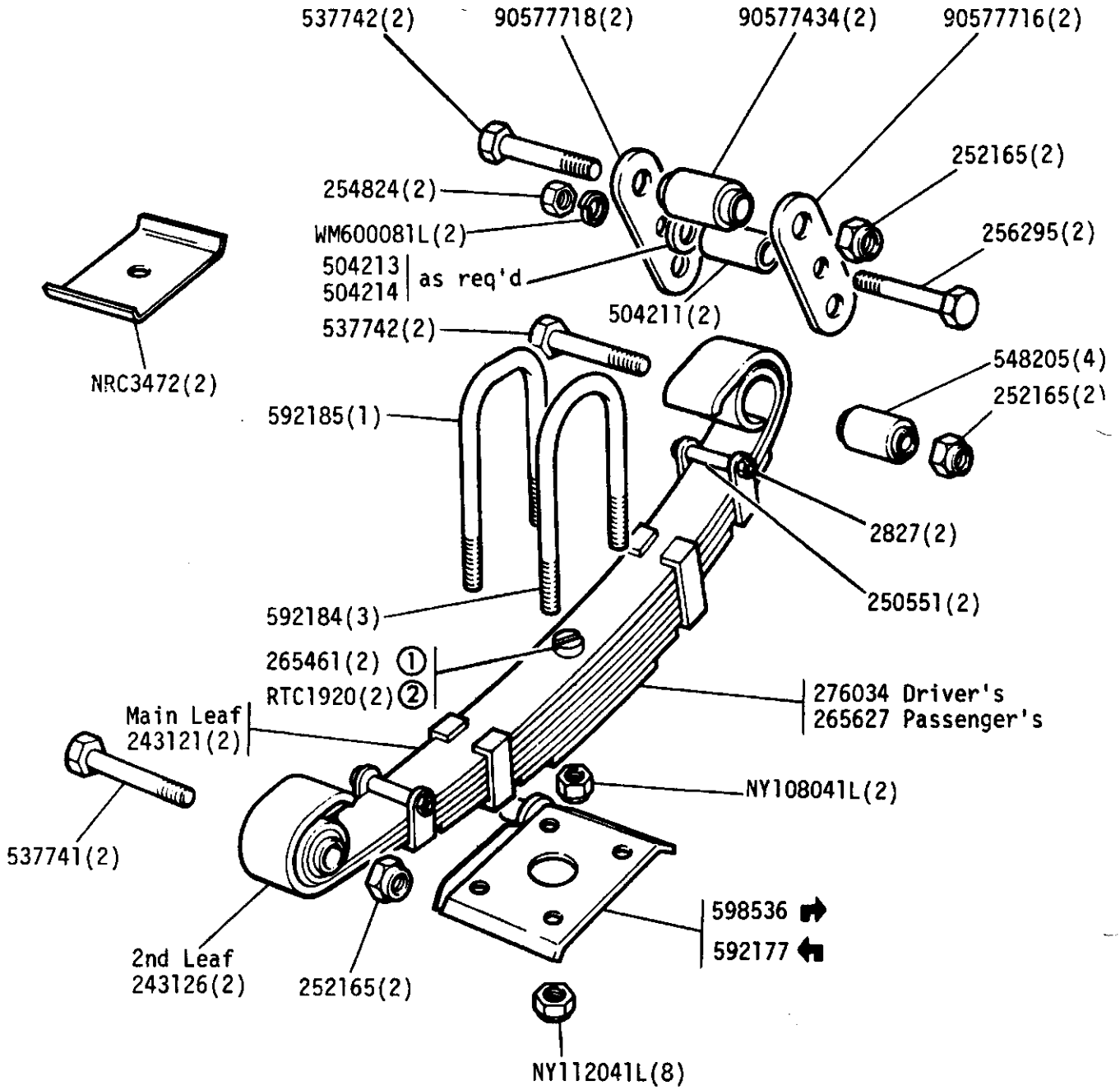

Part numbers of road springs are stamped on the underside of 3rd or bottom leaf

① UNF

② Metric

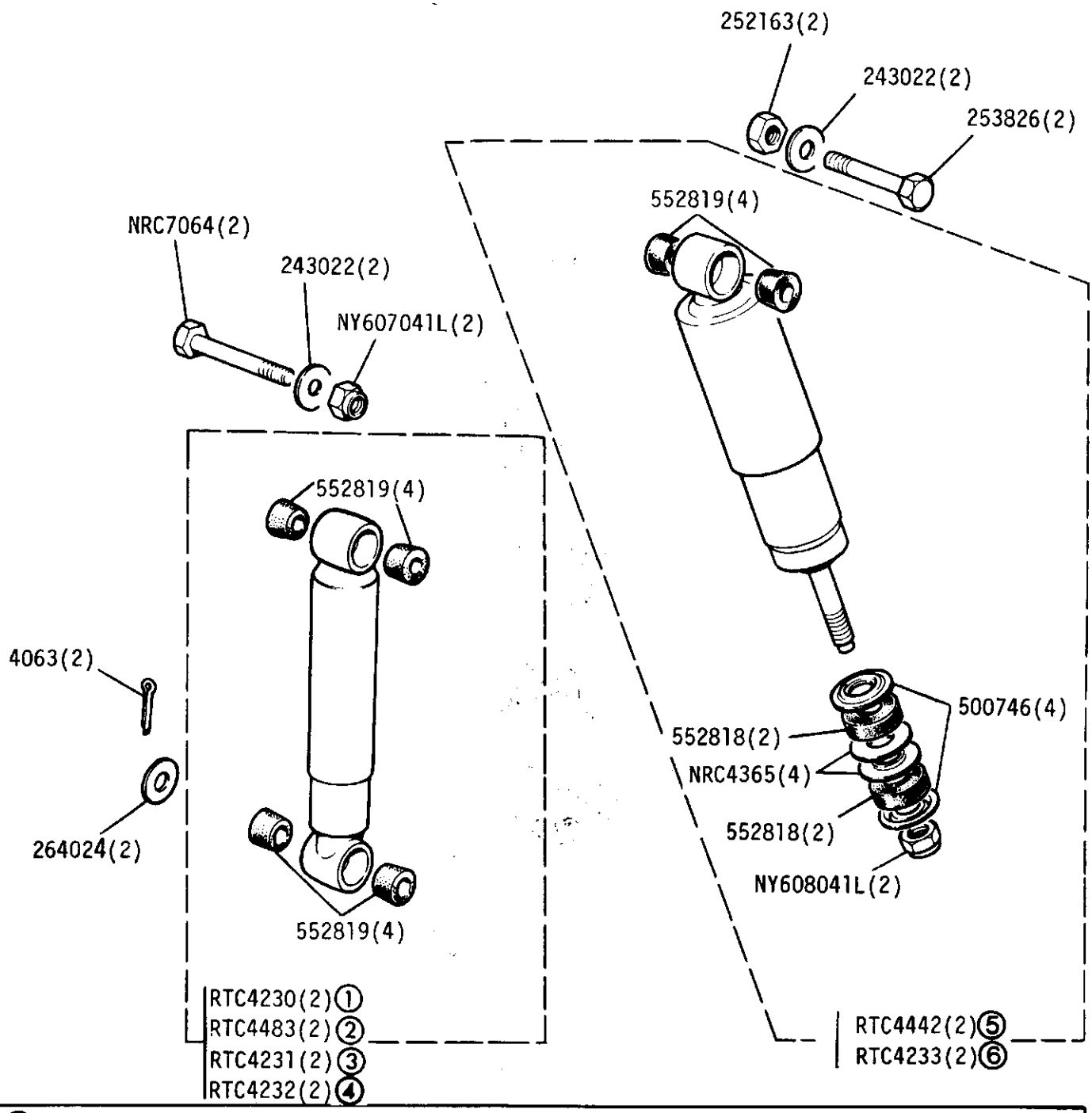

① 88" Front
② 109" and 109V8 Front
③ 109" Front 1 Ton
④ 88" Rear
⑤ 109" and 109V8 Rear
⑥ 109" Rear 1 Ton

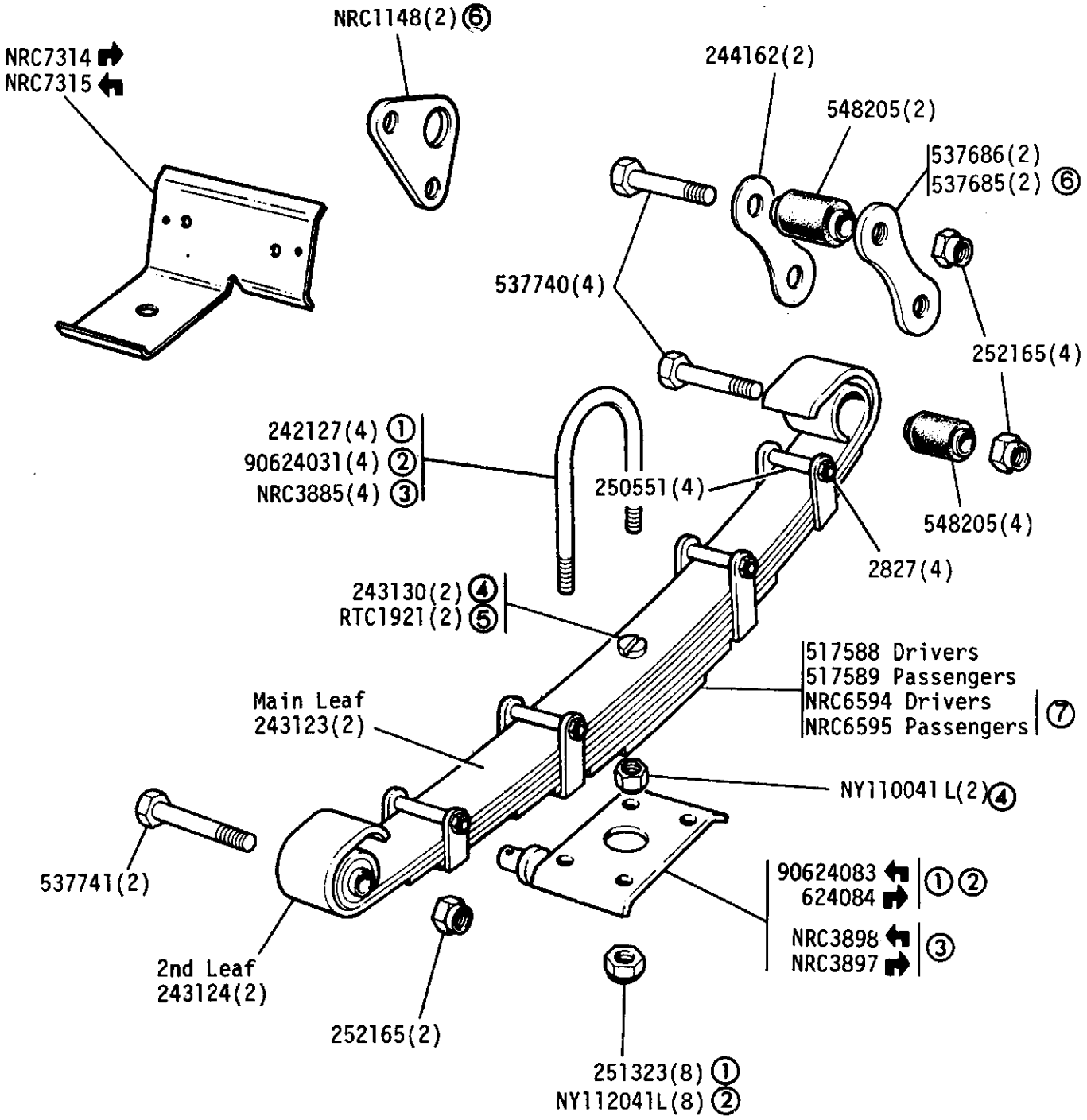

Part numbers of road springs are stamped on underside of 3rd or bottom leaf

① Up to suffix 'C' inclusive
② Axle suffix 'D'
③ Axle suffix 'E' onwards
④ UNF
⑤ Metric
⑥ Germany
⑦ De-Cambered Springs which reduce high drive line joint angles experienced on certain unladen vehicles

SUSPENSION - Rear Road Springs - 109" and 109V8 - Except 109" 1 Ton.

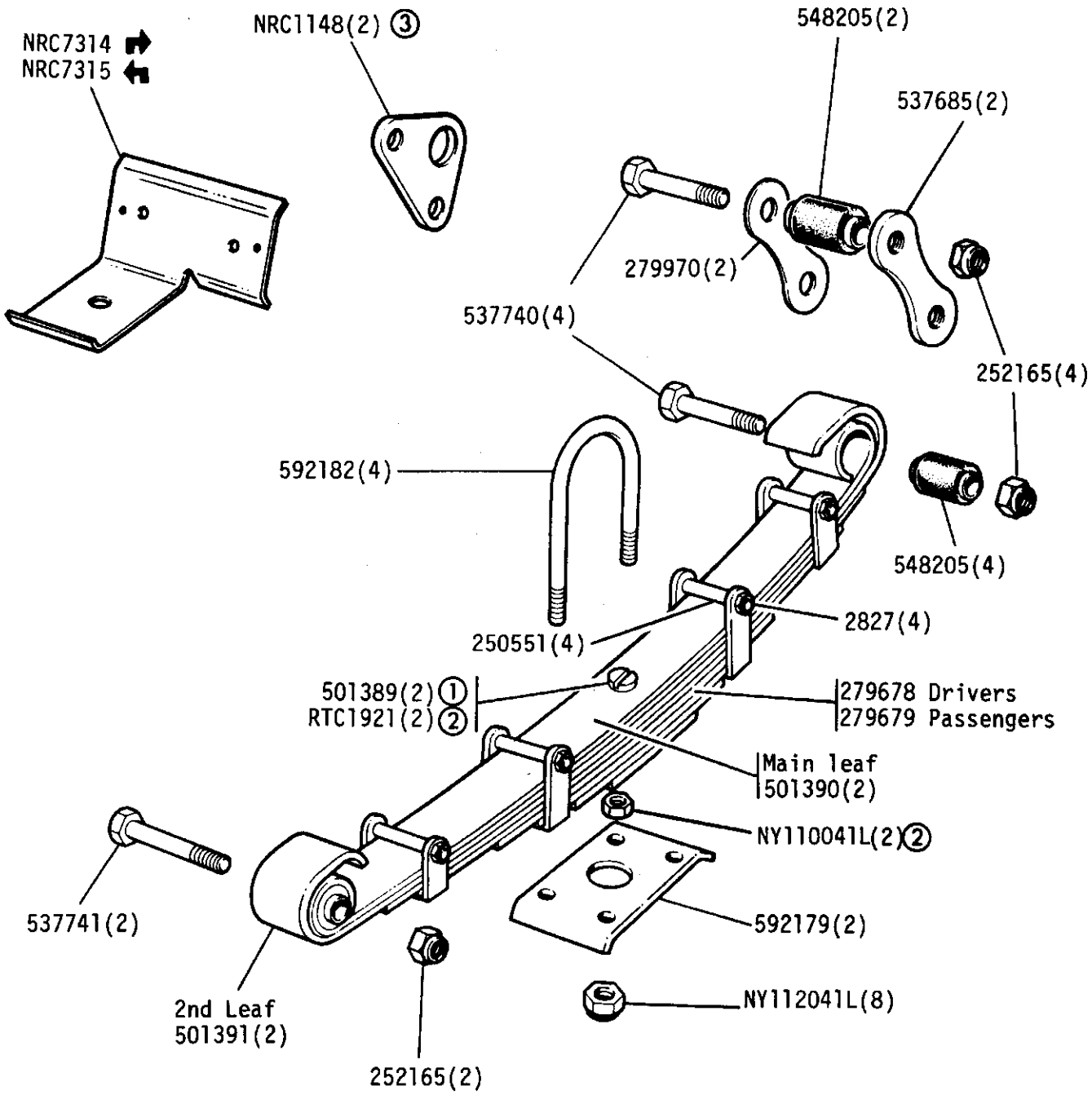

Part numbers of road springs are stamped on underside of 3rd or bottom leaf

① UNF

② Metric

③ Germany

GROUP E
SUSPENSION - Rear road springs - 109in 4 and 6 cylinder 1 Ton

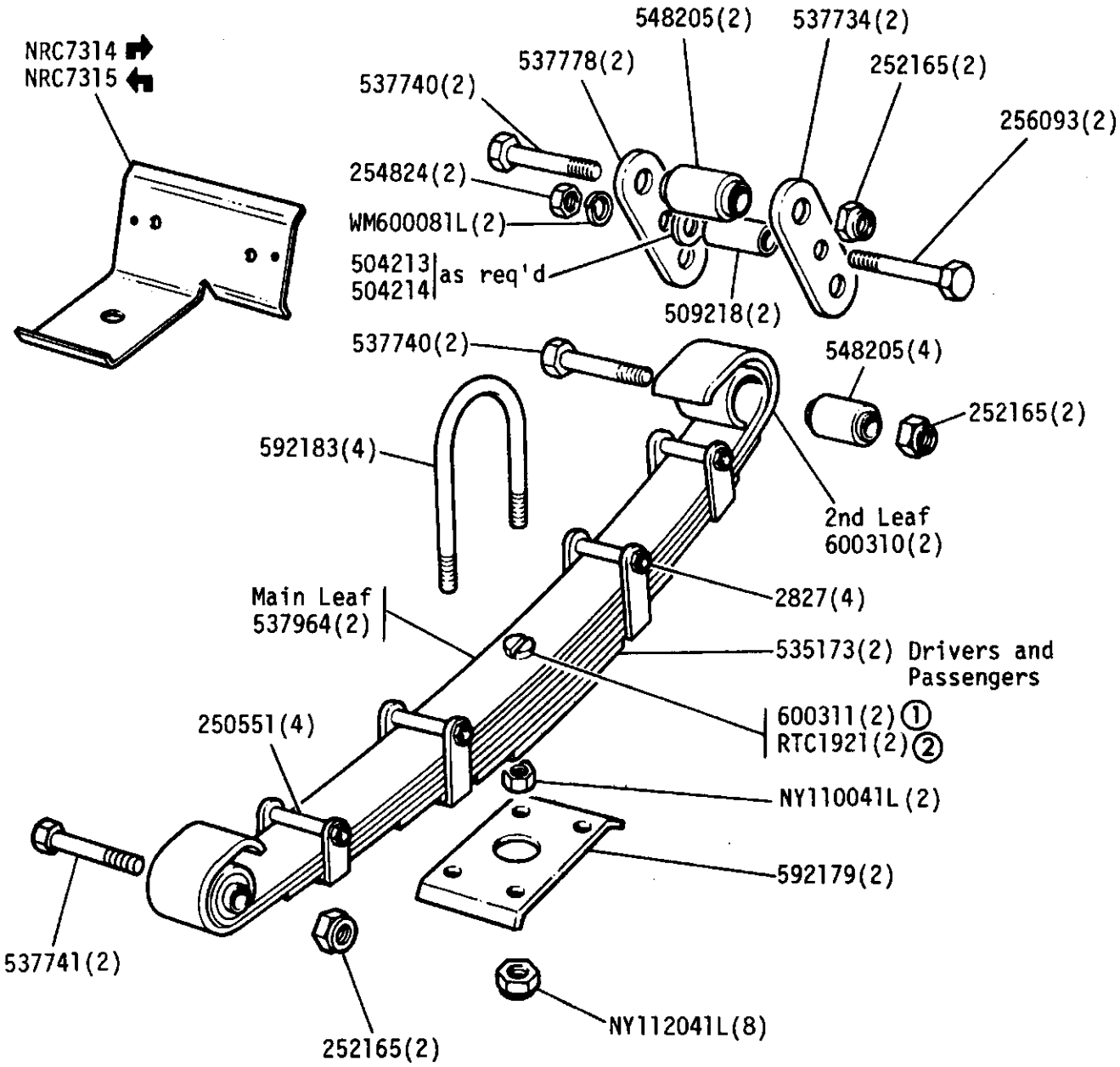

Part numbers of road springs are stamped on the underside of 3rd or bottom leaf

① UNF
② Metric

GROUP E

ROAD WHEEL - Tyre and Inner Tube

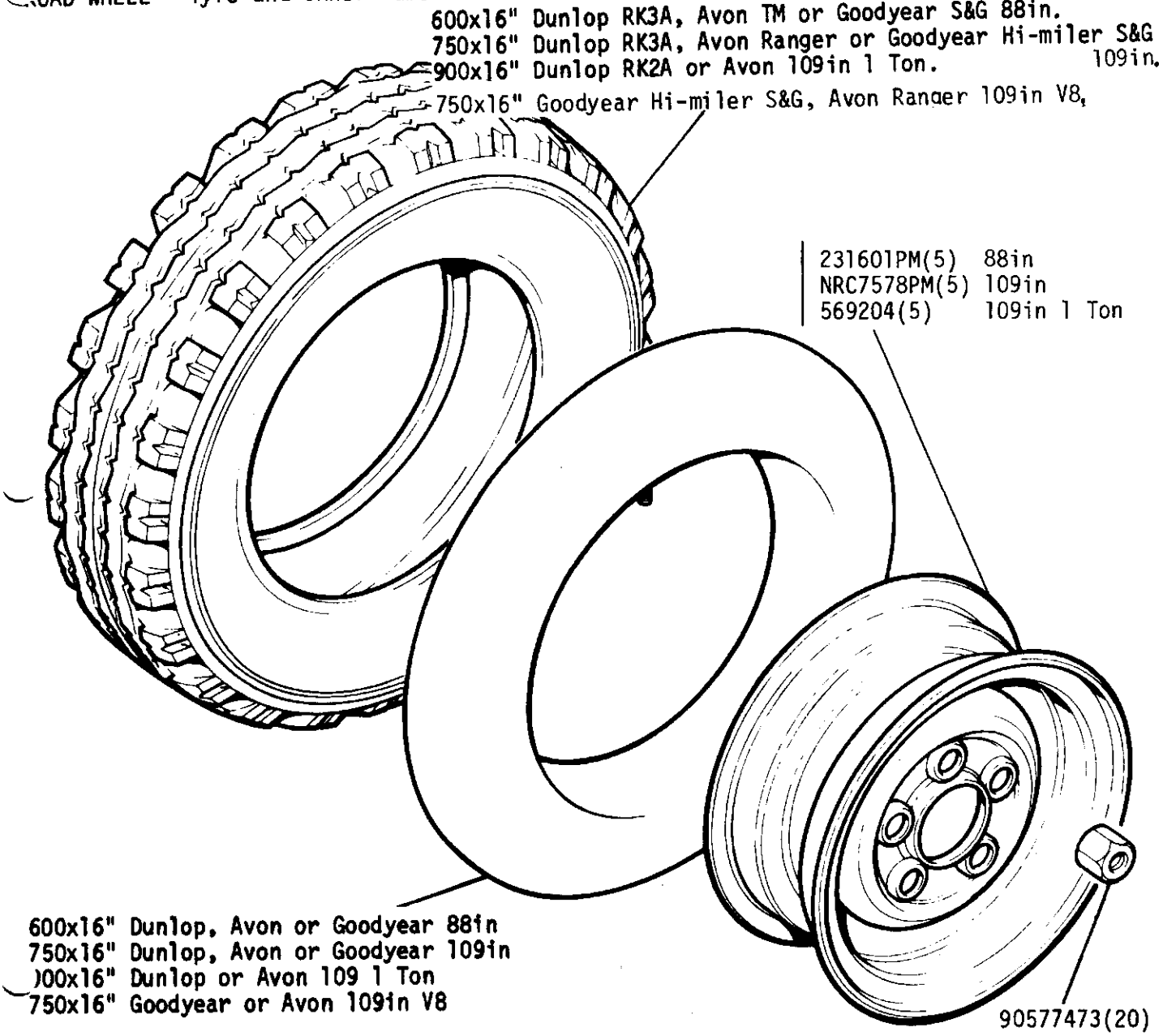

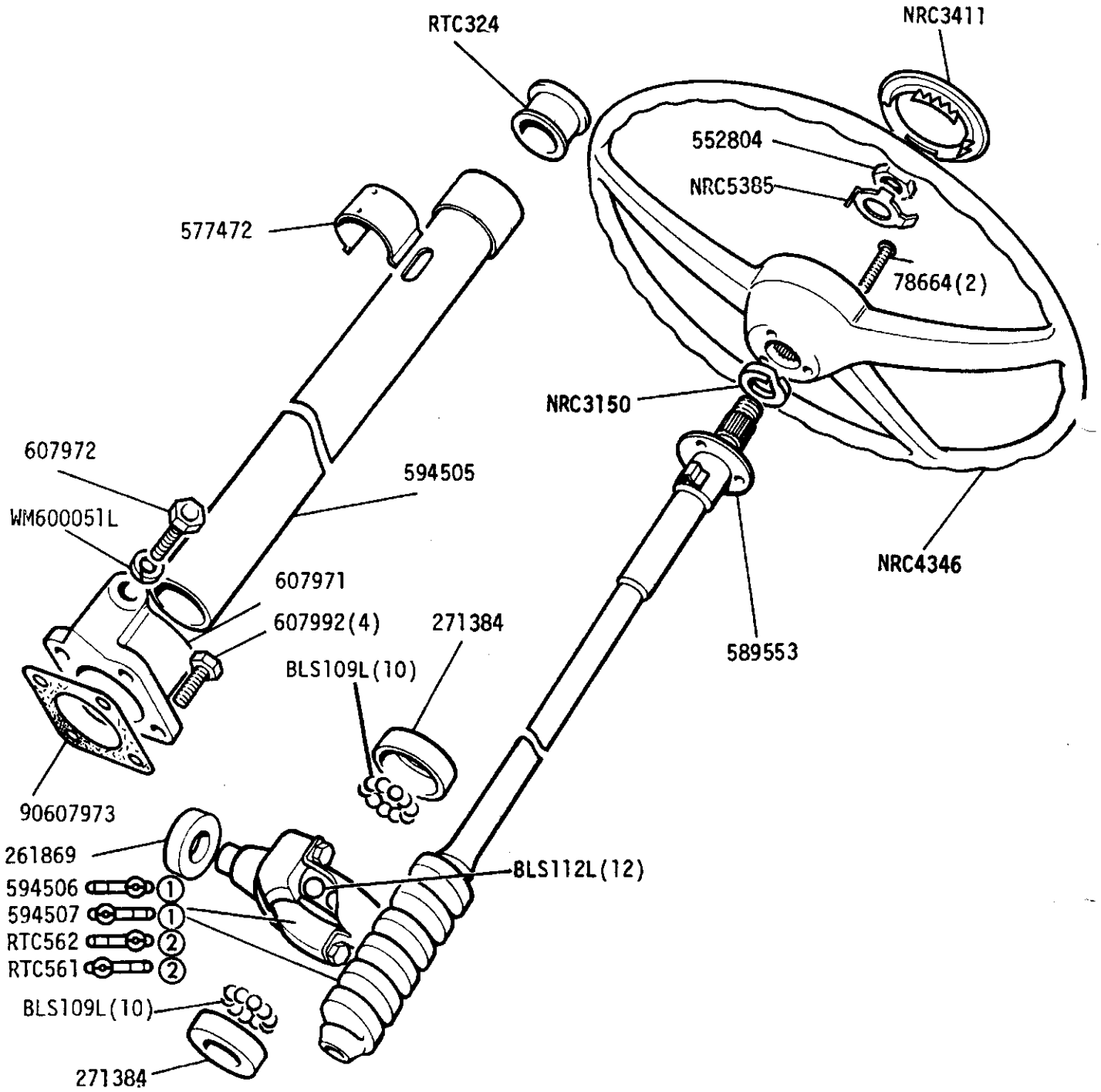

① Except 1 Ton
② 109 1 Ton

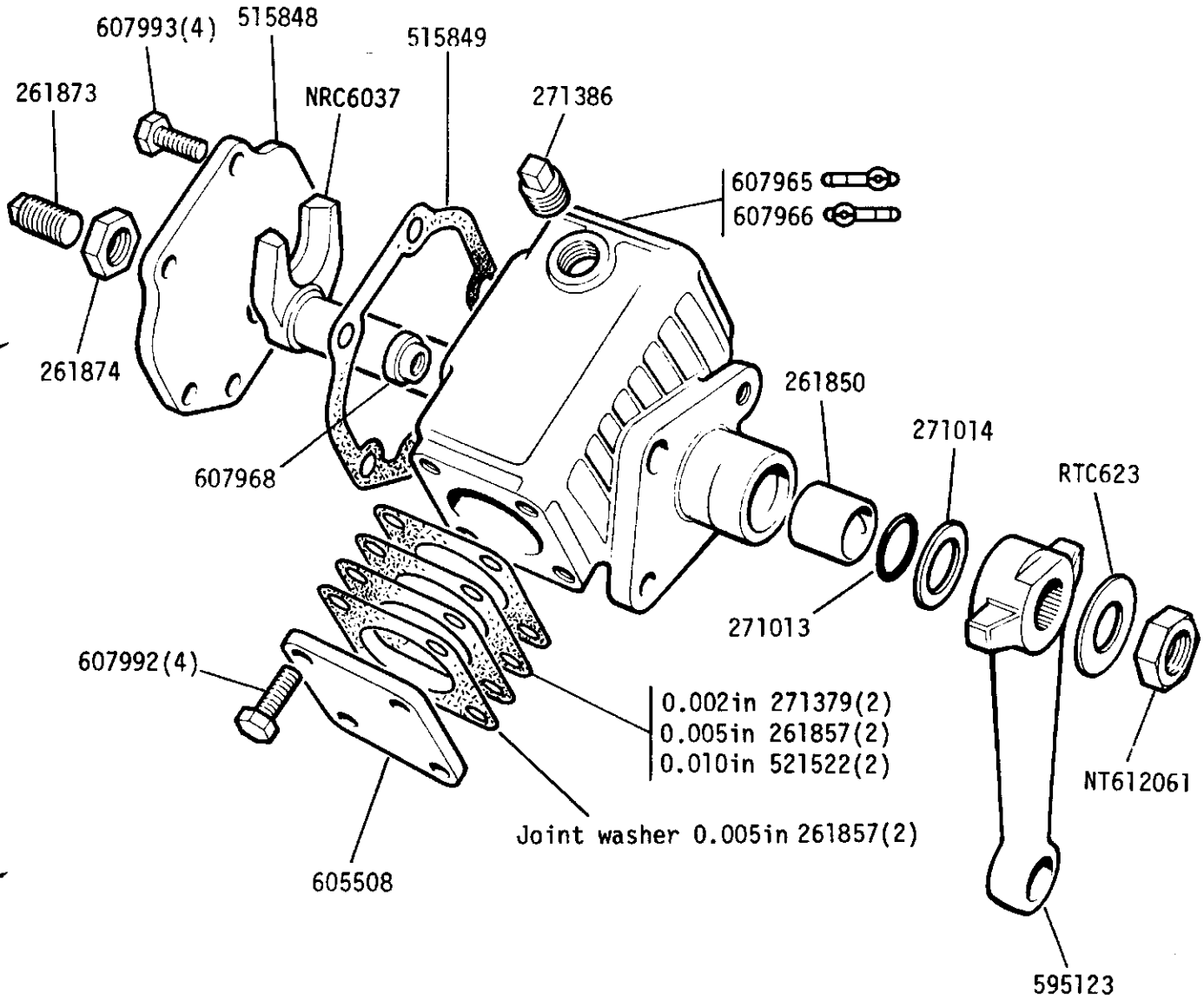

Steering Unit assembly NRC5960 Steering Unit assembly NRC5961	All models including 109V8 - Except 109 1 Ton
Steering Unit assembly NRC5962 Steering Unit assembly NRC5963	109 1 Ton. Optional on 109V8 - (Low Ratio)

GROUP F
STEERING - Column Support Bracket and Clamp

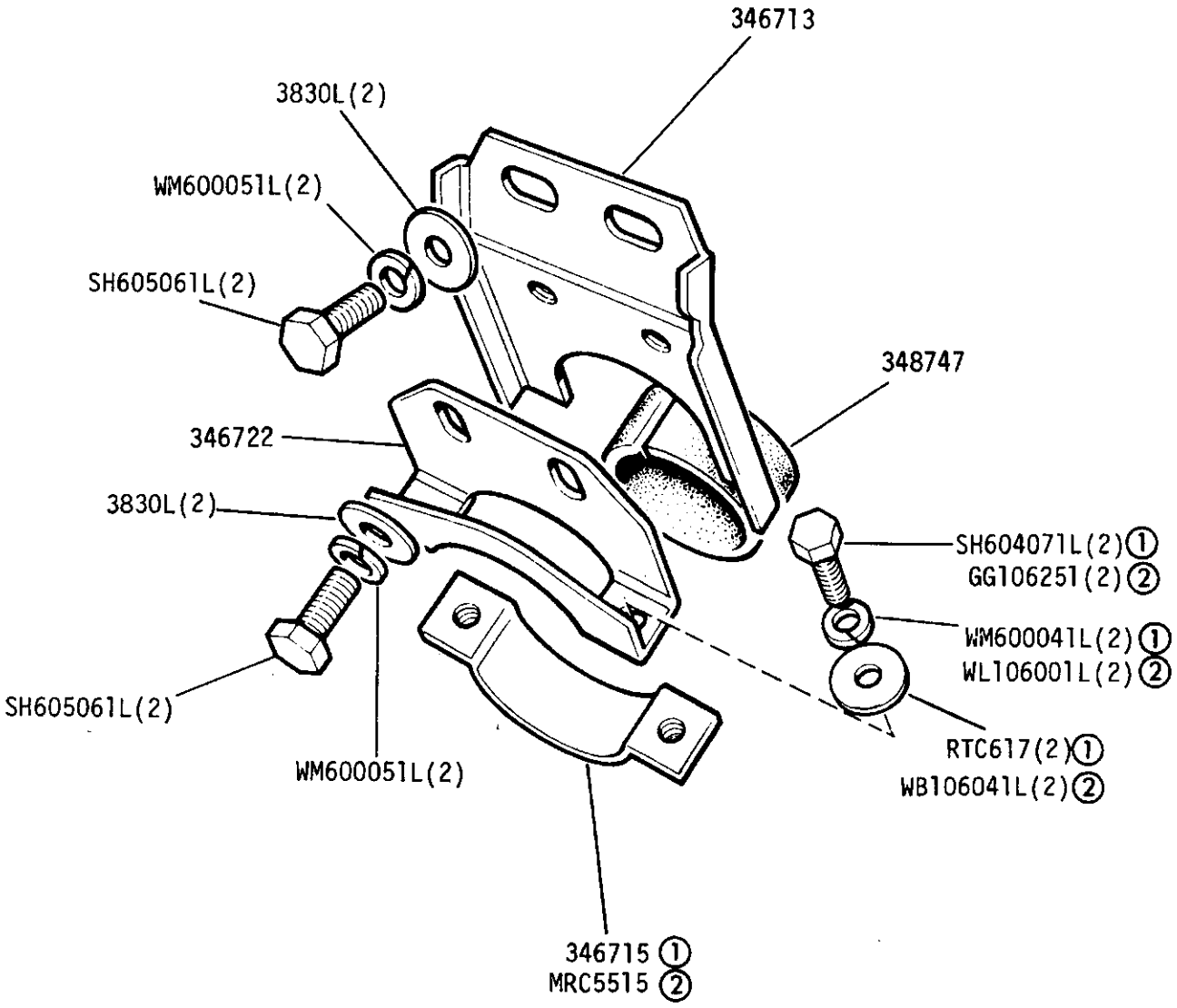

① UNF
② METRIC

GROUP F
STEERING - Column Mountings

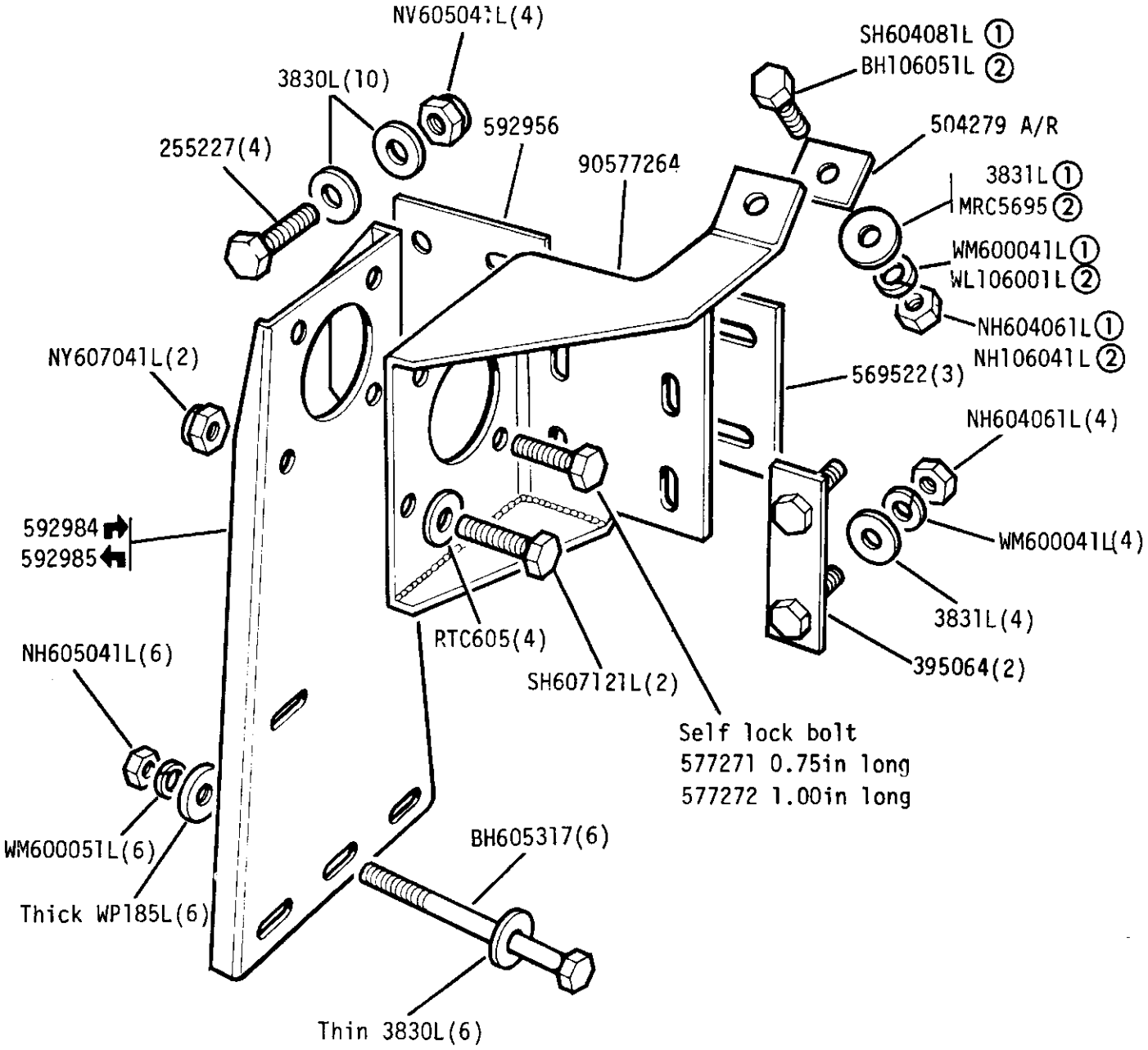

① UNF
② METRIC

GROUP F

STEERING - Column Mountings

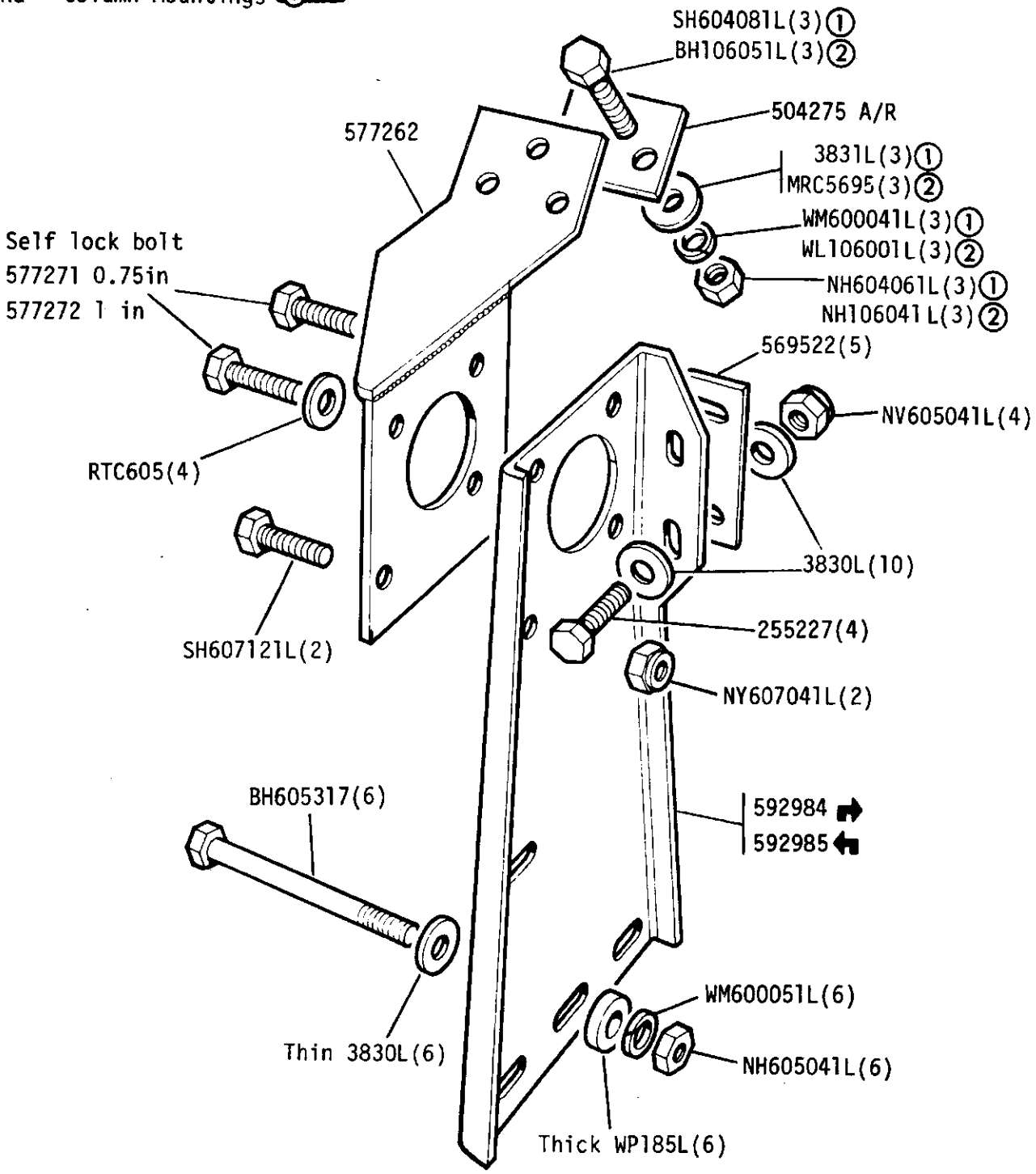

① UNF
② METRIC

GROUP F
STEERING, Relay

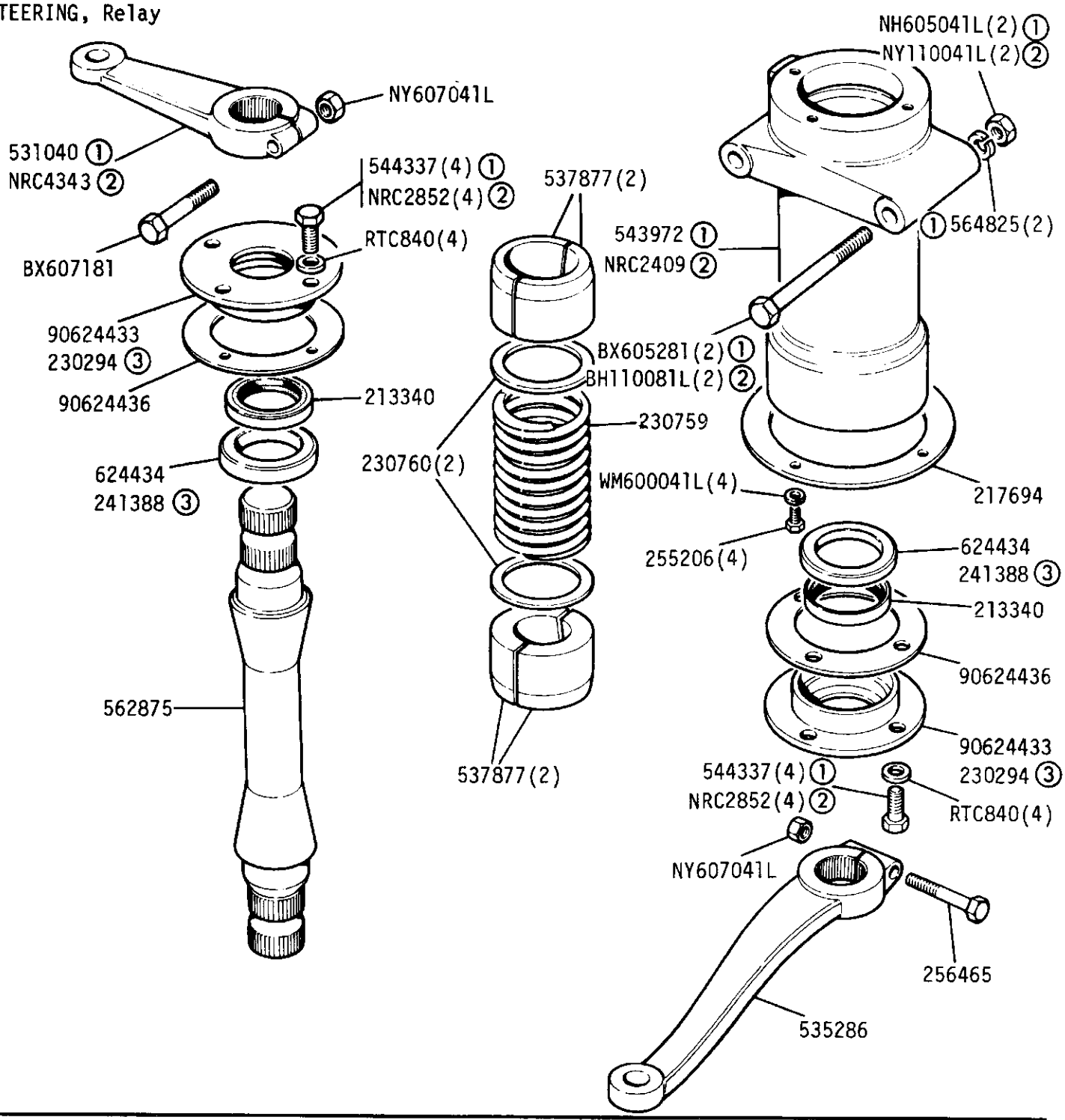

Steering relay assembly NRC1269 Except 109 V8
Steering relay assembly NRC2410 109 V8

① Except 109 V8

② 109 V8

③ Early models

GROUP F
STEERING - Linkage Except 109in 1 Ton

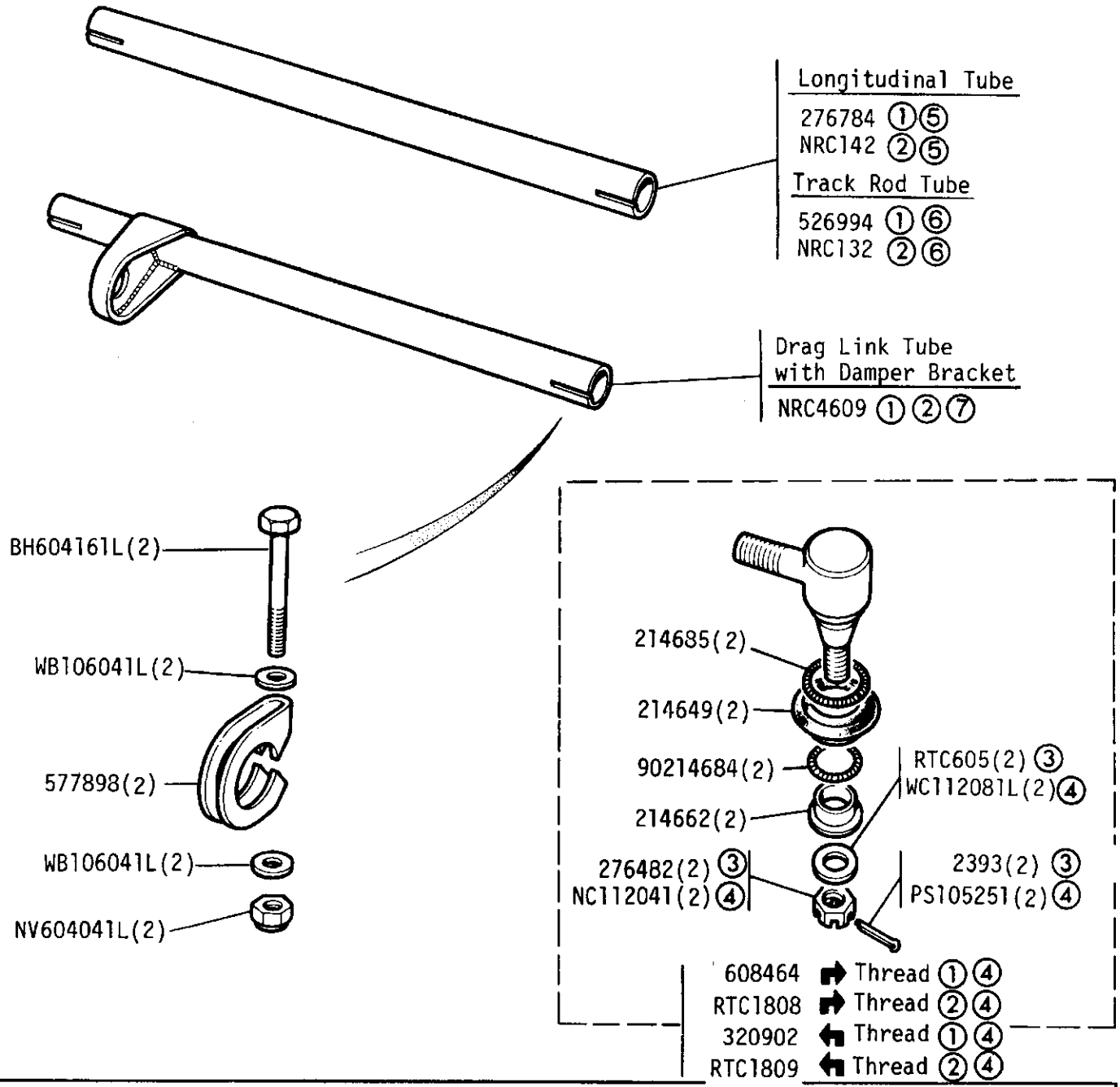

① Up to Axle suffix 'D' inclusive
② From Axle suffix 'E' onwards
③ UNF Fixings
④ Metric Fixings
⑤ Longitudinal tube assembly 90608462
⑤ Longitudinal tube assembly RTC1806
⑥ Steering track rod assembly 608465
⑥ Steering track rod assembly RTC1810
⑦ Steering drag link assembly
With damper bracket RTC2547

STEERING LINKAGE - Steering Track Rod 109in 1Ton

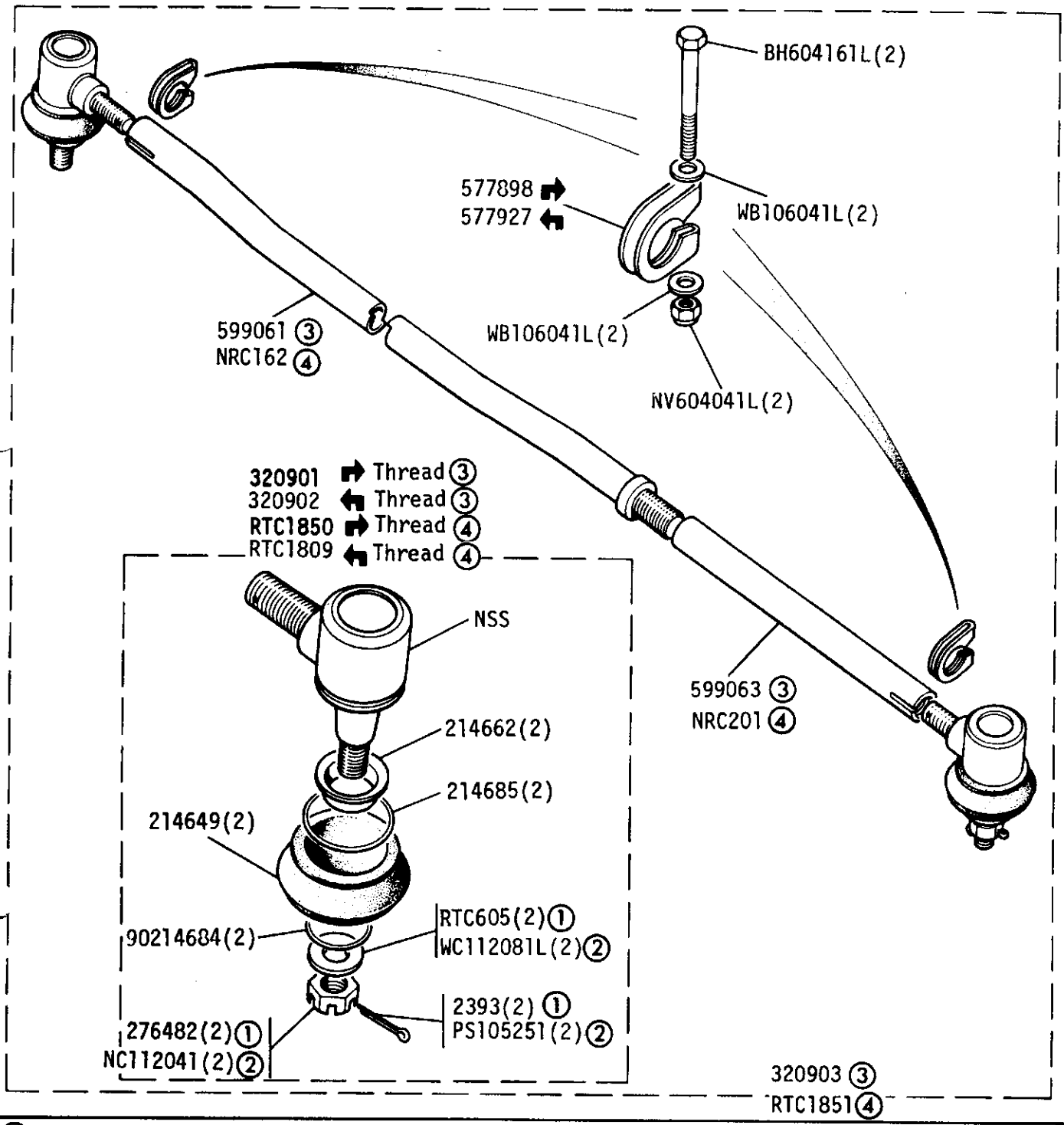

① UNF Fixings
② Metric Fixings
③ Up to July 1974 inclusive
④ From August 1974 onwards

GROUP F
STEERING - Drag Link Tube Assembly and Steering Damper 109in 1 Ton

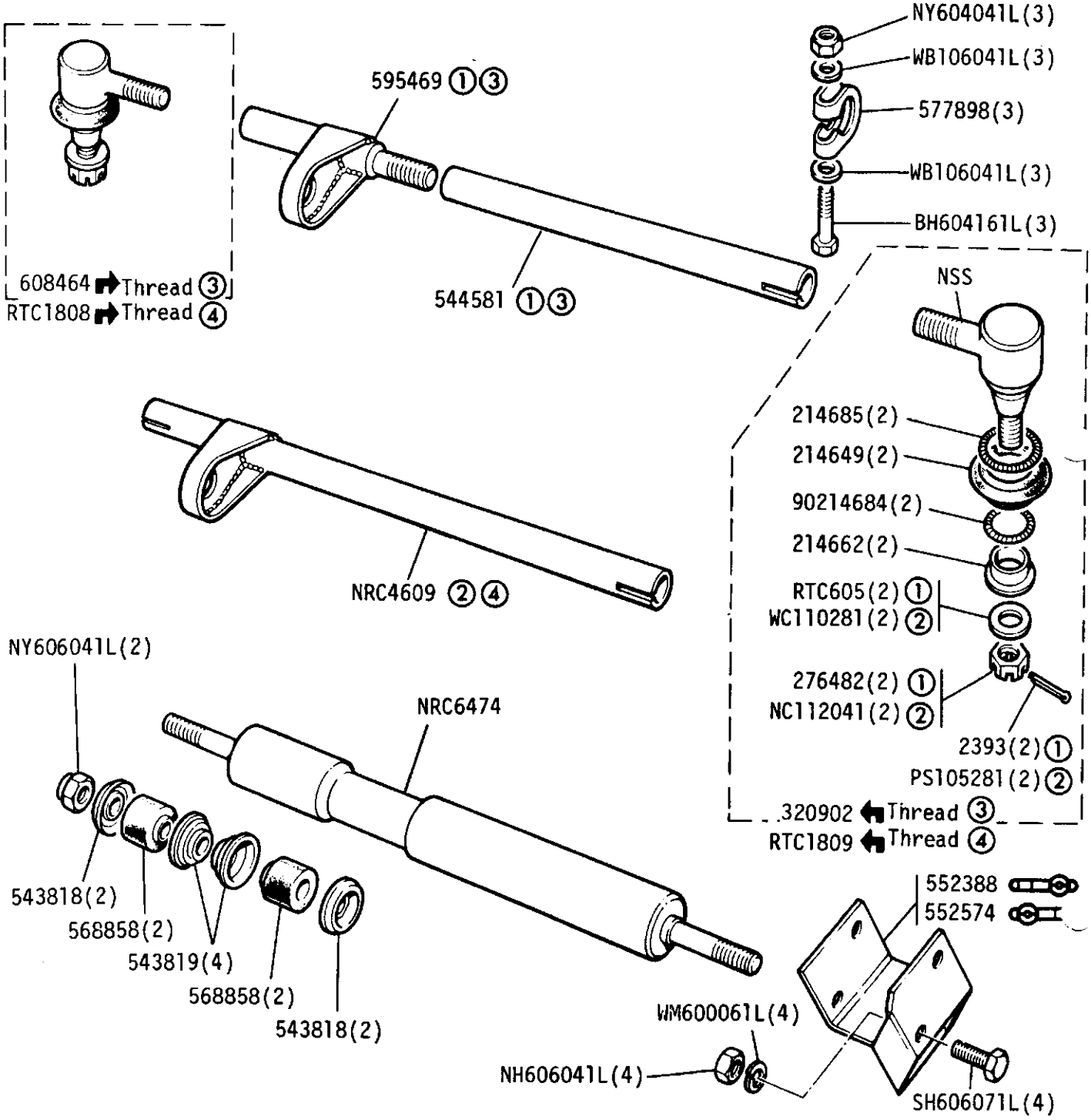

Drag link and damper bracket assembly RTC2547

① UNF Fixings

② Metric Fixings

③ Up to July 1974 inclusive

④ From August 1974 onwards

STEERING LINKAGE - Longitudinal Tube 109in 1 Ton

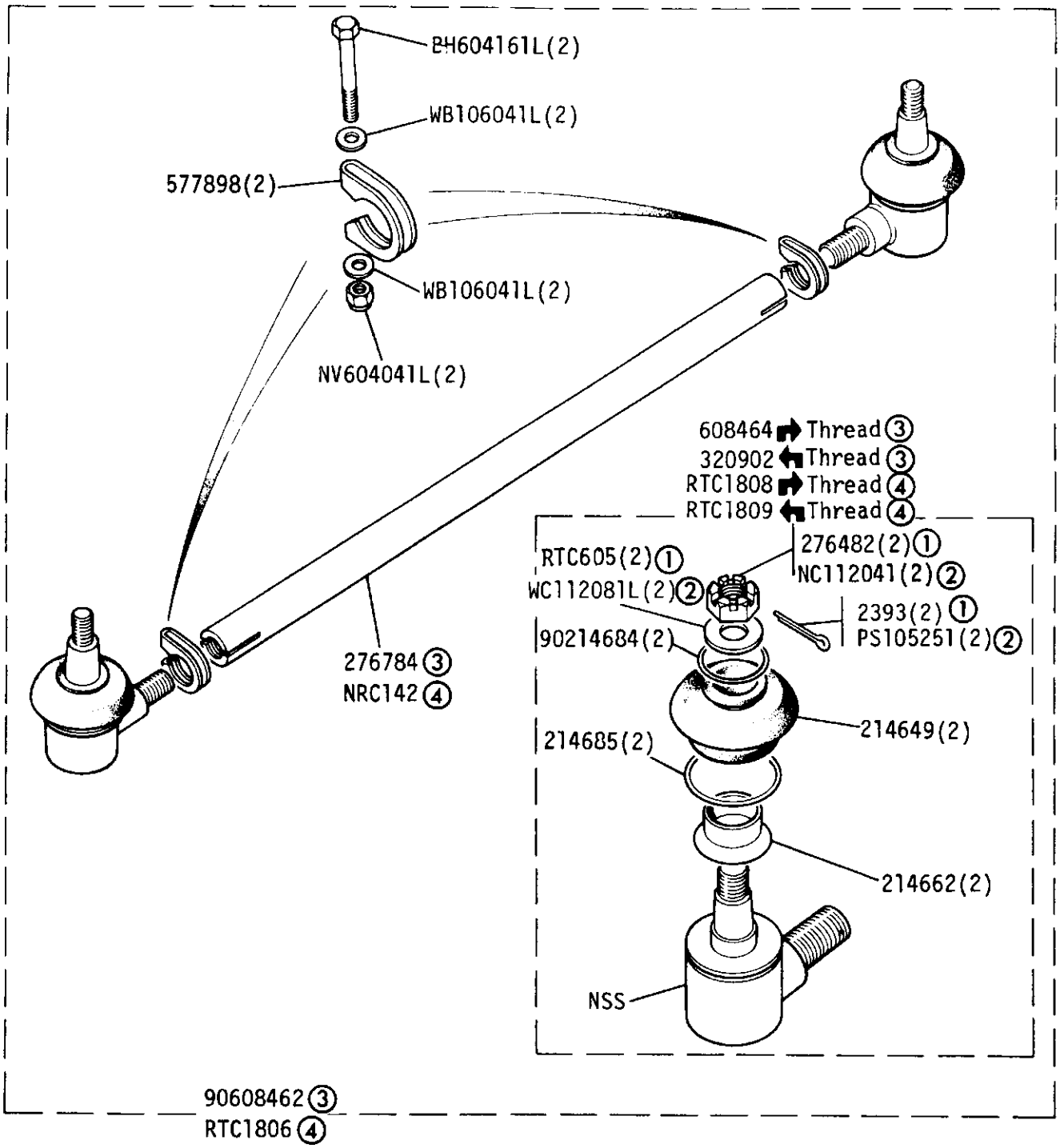

① UNF Fixings
② Metric Fixings
③ Up to July 1974 inclusive
④ From August 1974 onwards

GROUP F
STEERING - Drag link tube assembly and steering damper 109V8

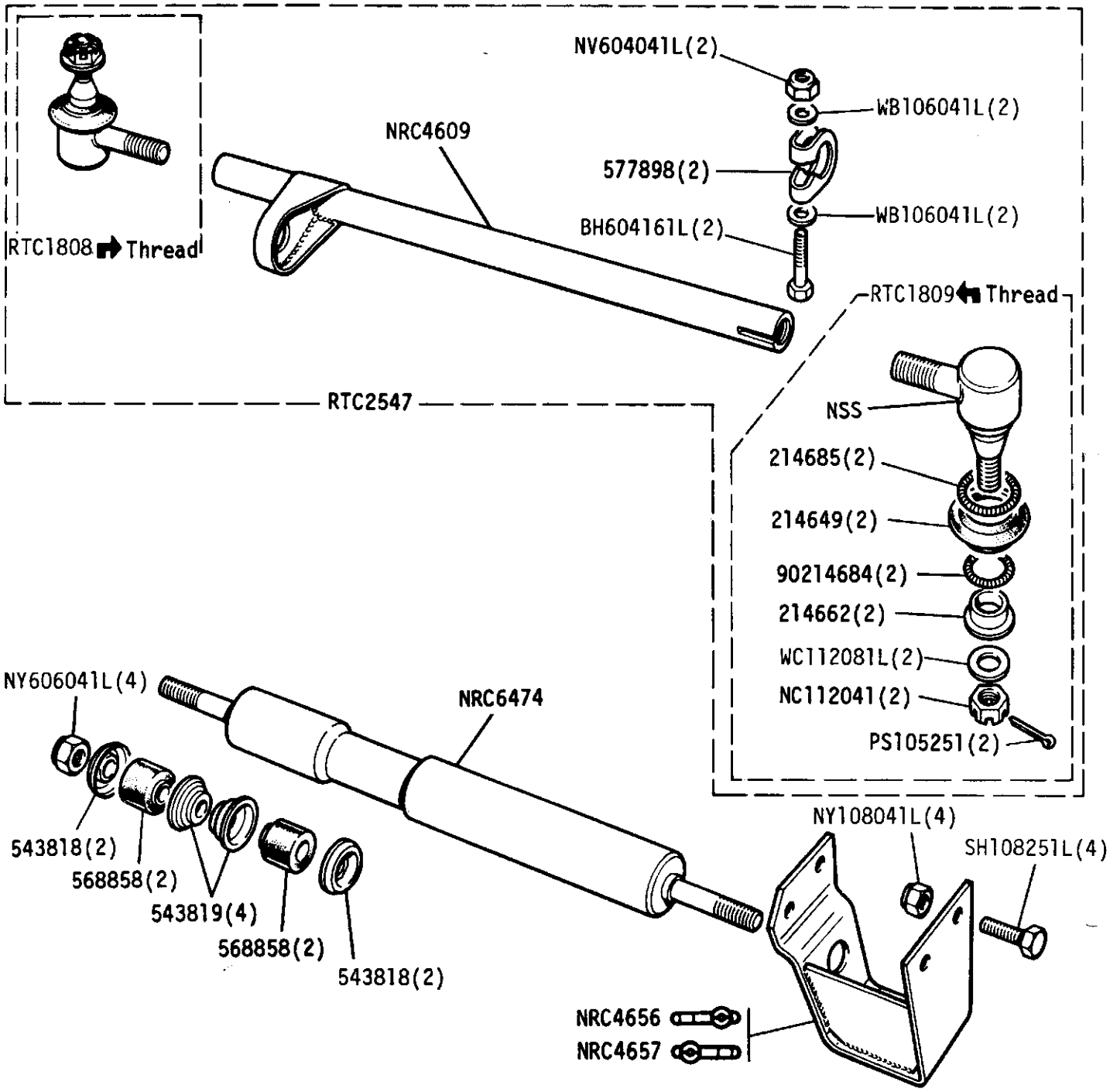

GROUP G

BRAKES - Front and Rear 88in - Up to June 1980

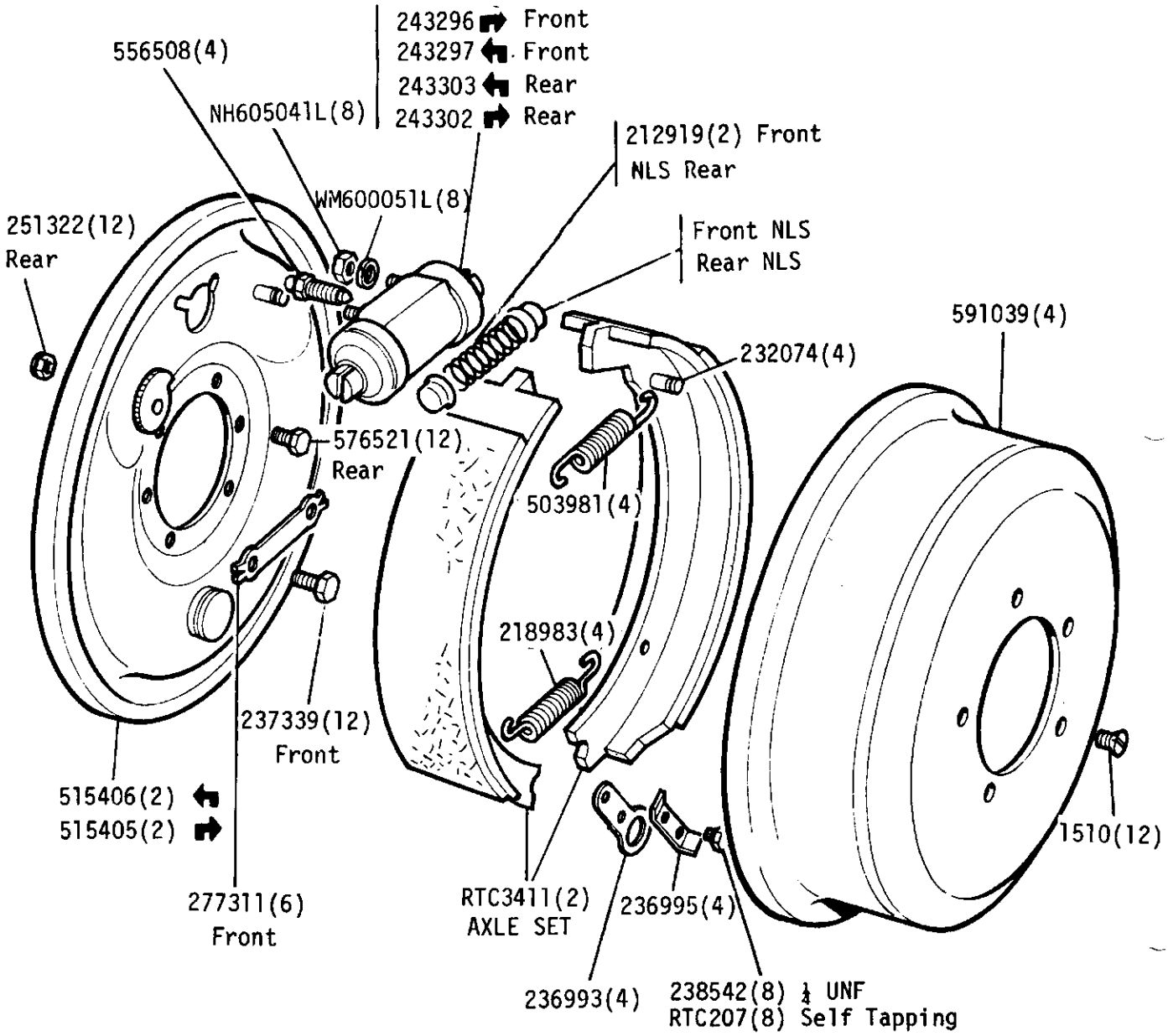

Brake Lining, complete with rivets AAU9942(2) Axle Set
Wheel cylinder overhaul kit, front 275744
Wheel cylinder overhaul kit, rear 266687
Brake adjuster kit, all drum brakes, RTC3176, (Axle set).

GROUP G
BRAKES - Front-109in 4 Cylinder Except 109in 1 Ton
Front-88in from July 1980

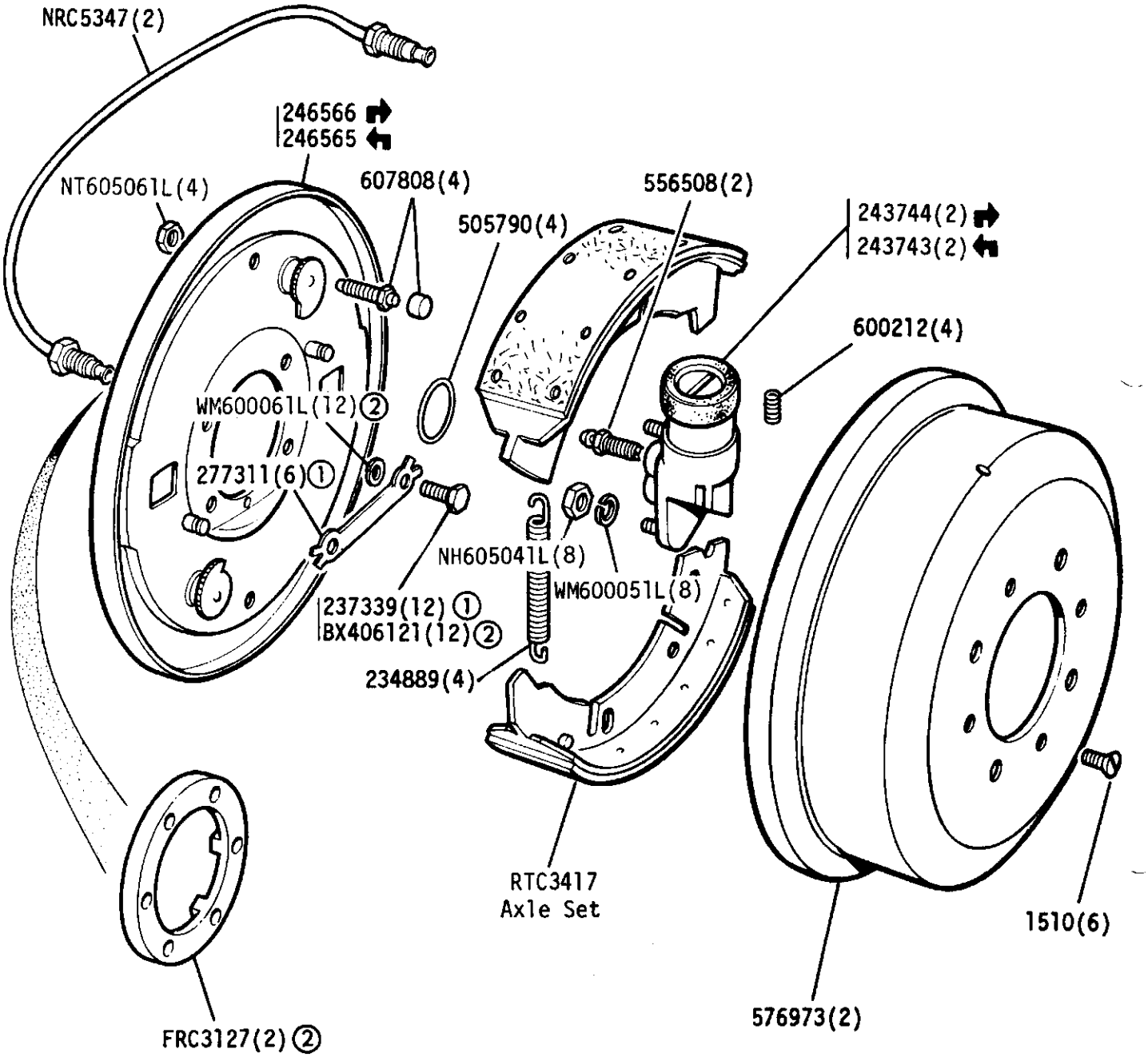

Brake lining complete with rivets AAU8471 Axle Set
Wheel cylinder overhaul kit 266684

Brake adjuster kit, all drum brakes, RTC3176, (Axle set).

① Upto Sept. 1980
② From Oct. 1980

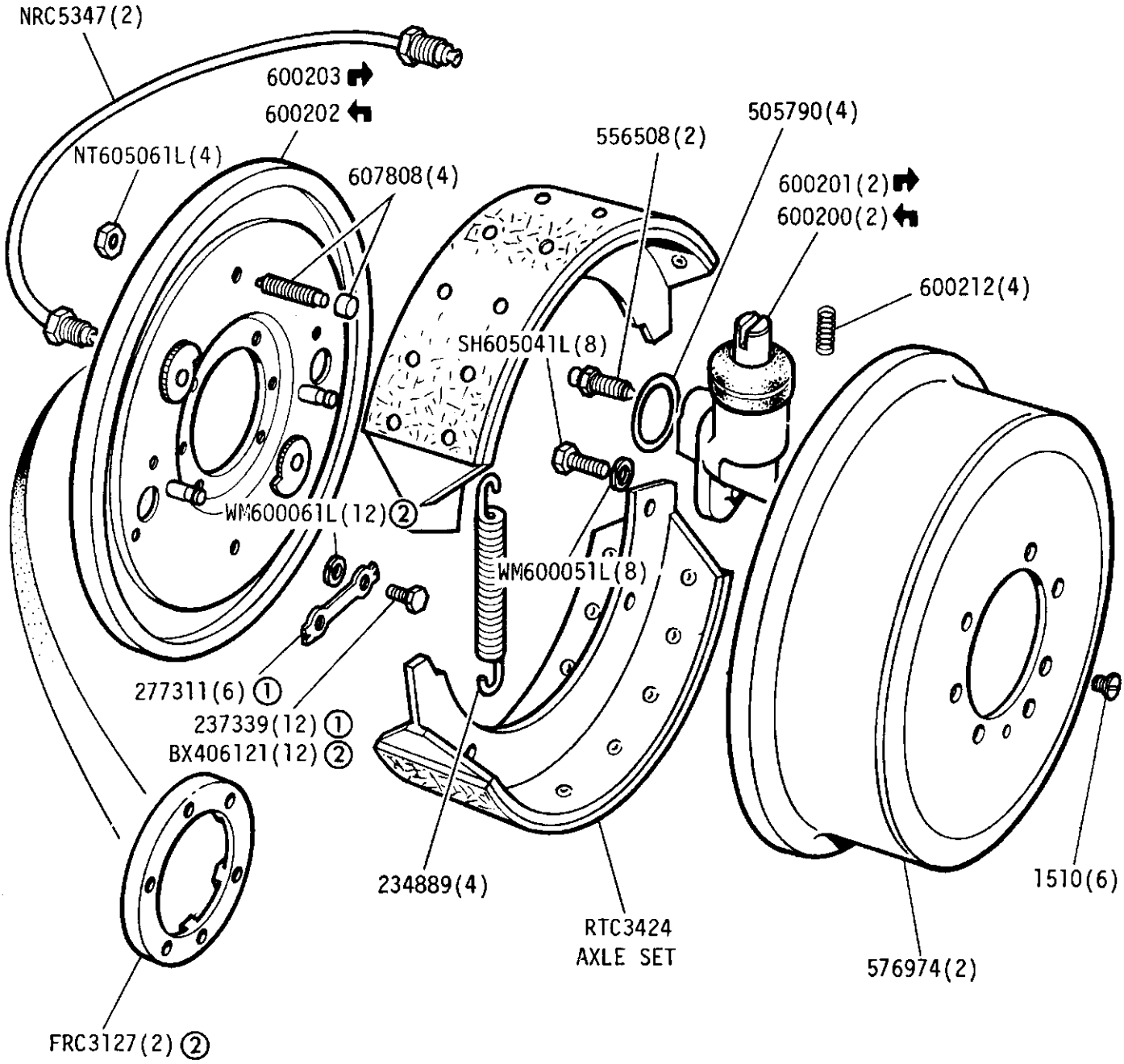

Brake lining, complete with rivets AAU 8469 Axle Set

Wheel cylinder overhaul kit 600210

All items on this frame are also applicable to 109 1 Ton 4 and 6 cylinder models

① Up to Sept. 1980

② From Oct. 1980

Brake adjuster kit, all drum brakes, RTC3176, (Axle set).

GROUP G
BRAKES - Rear 88 in - From July 1980

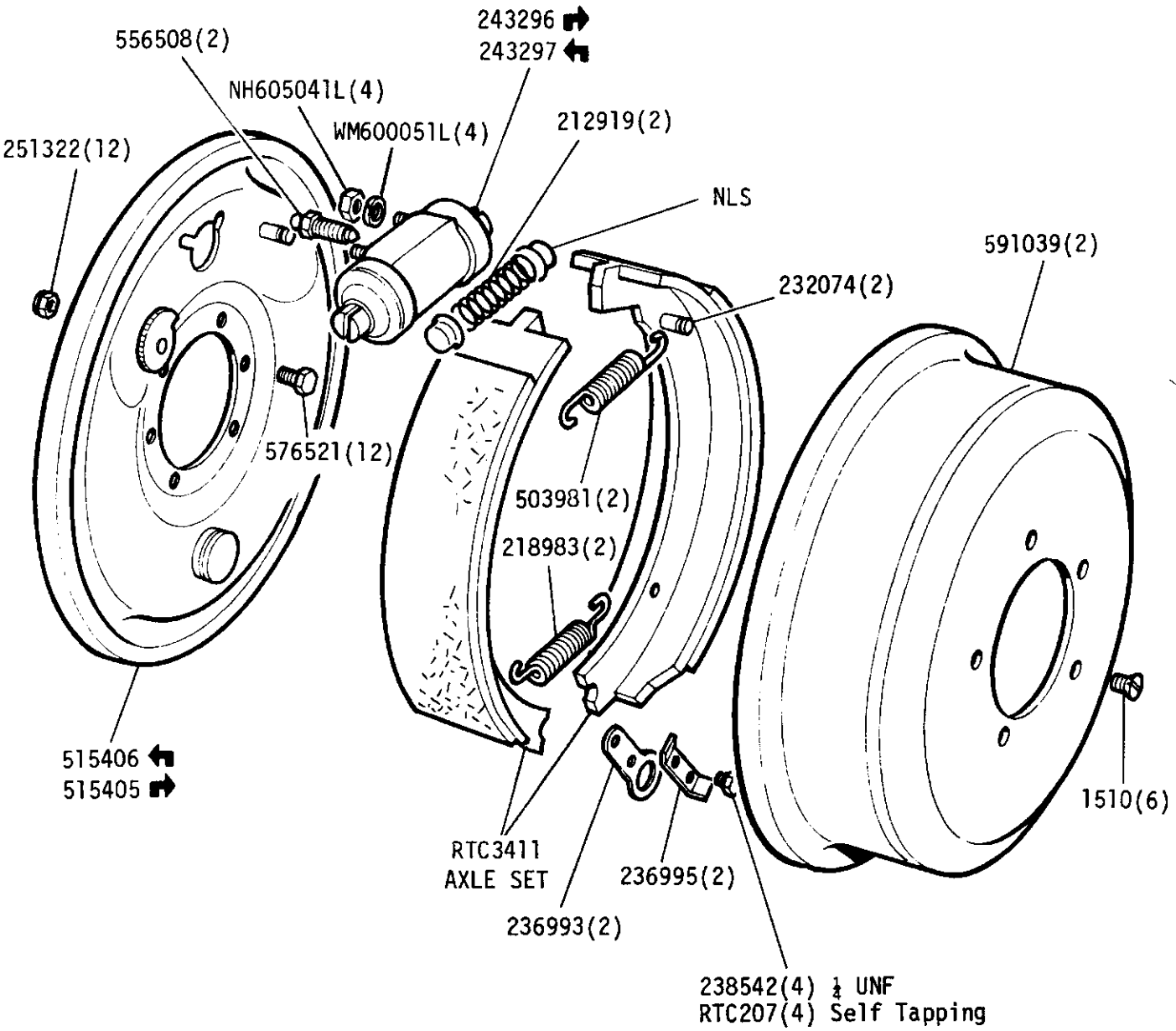

Brake Lining, complete with rivets AAU9942 Axle Set
Wheel cylinder overhaul kit, 275744
Brake adjuster kit, all drum brakes, RTC3176, (Axle set).

GROUP G
BRAKES - Rear 109" including V8

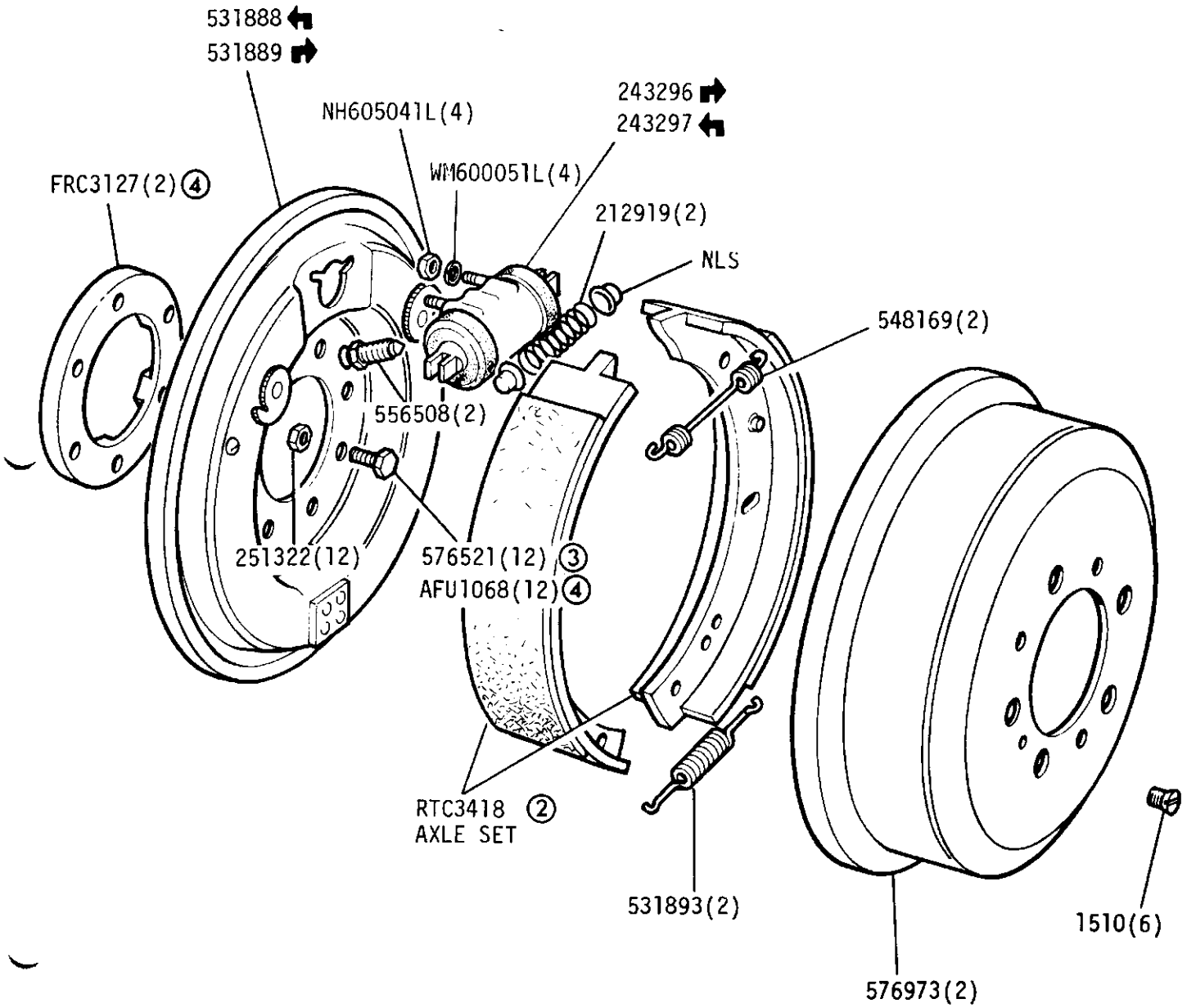

All items on this frame are also applicable to 109 1 Ton 4 and 6 cylinder models

1 Up to June 1980 3 Up to Sept. 1980

2 From July 1980 4 From Oct. 1980

Wheel cylinder overhaul kit 275744

1 Brake lining, complete with rivets AAU8470 Axle Set for DON TYPE ONLY.
2 Brake lining, complete with rivets AEU1880 Axle Set for RTC3418 (FERODO TYPE) ONLY

Brake adjuster kit, all drum brakes, RTC3176, (Axle set).

GROUP G
Transmission brake except 109 V8

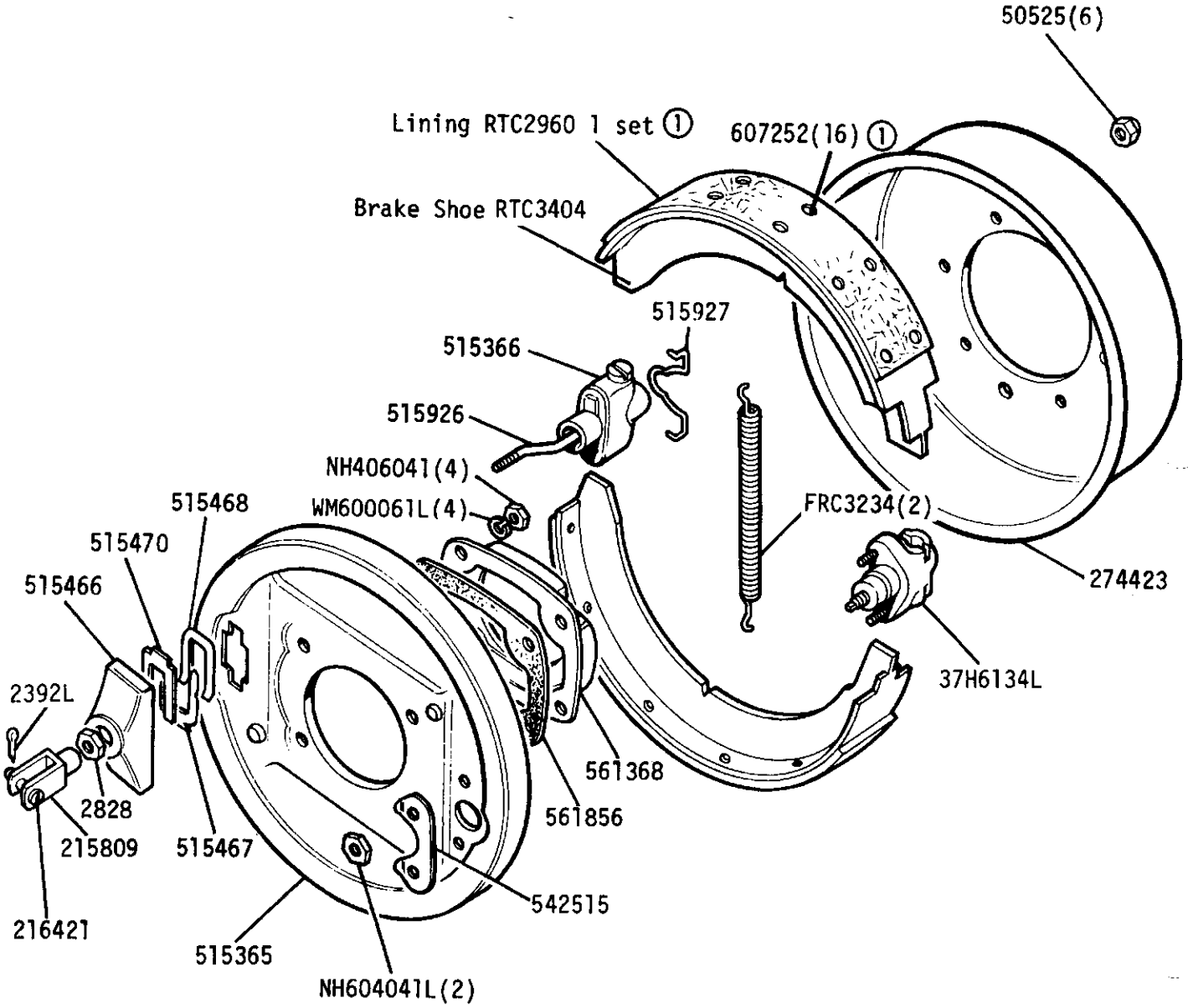

Repair kit for adjuster unit 515924
Repair kit for expander unit 515923

① 8 Hole lining for RTC3404

GROUP G
Transmission brake 109 V8

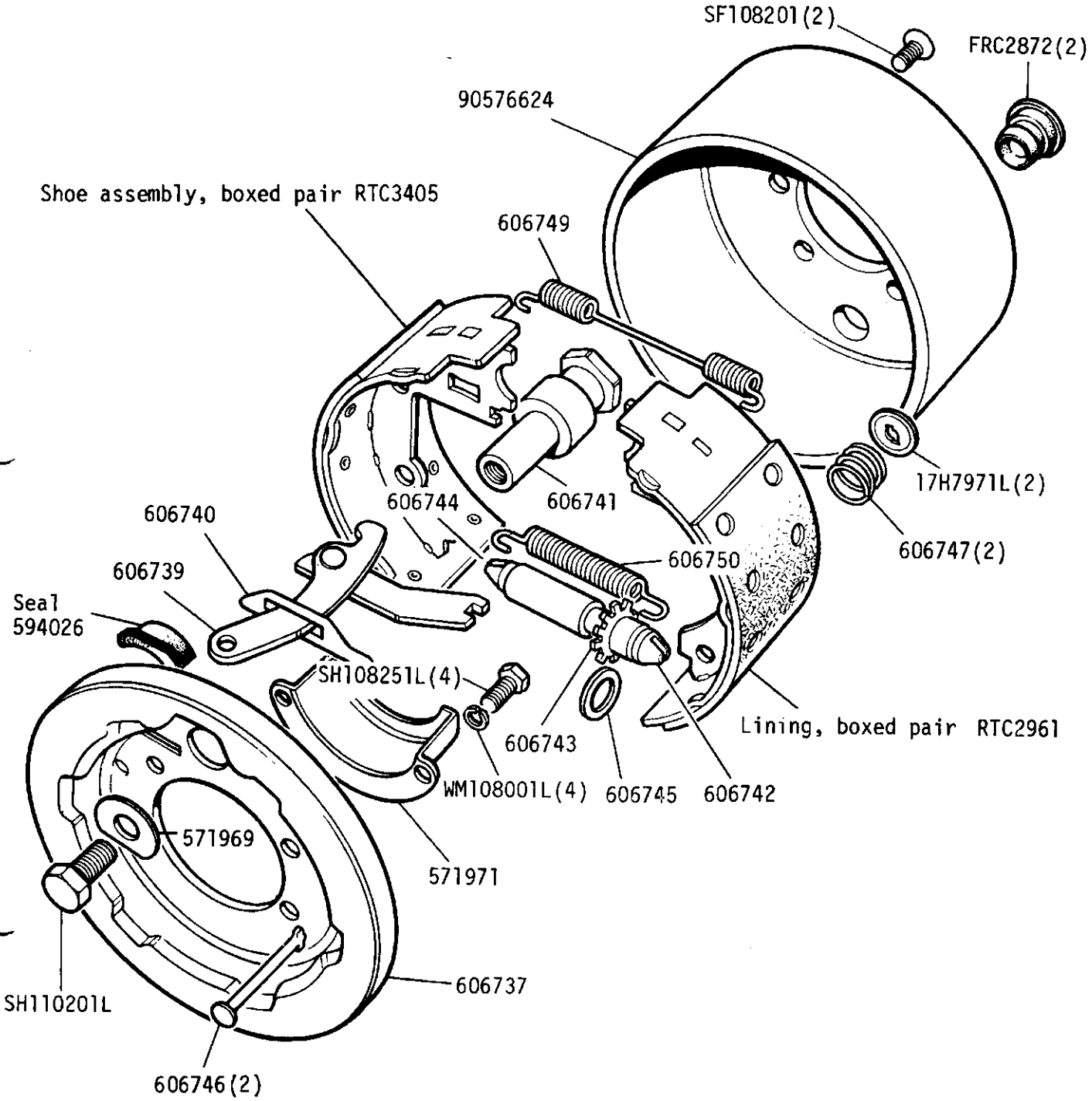

GROUP G
BRAKES - Pedal and Bracket - Vehicles without Servo

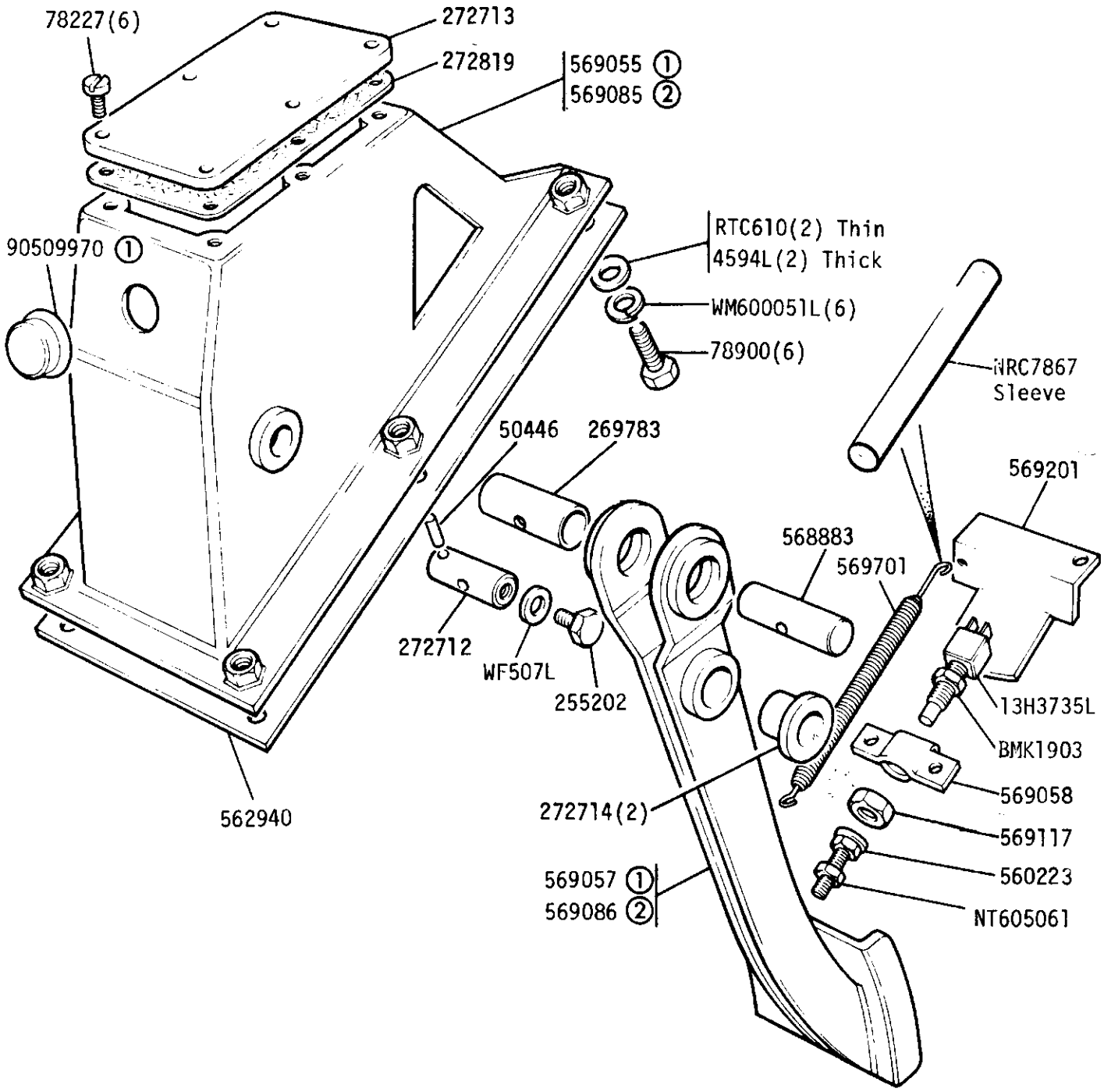

Brake pedal and bracket assembly 569054 ①
Brake pedal and bracket assembly 569084 ②

① 88in up to June 1980

② 88in from July 1980 and all 109in

BRAKES - Pedal and bracket, vehicles with servo

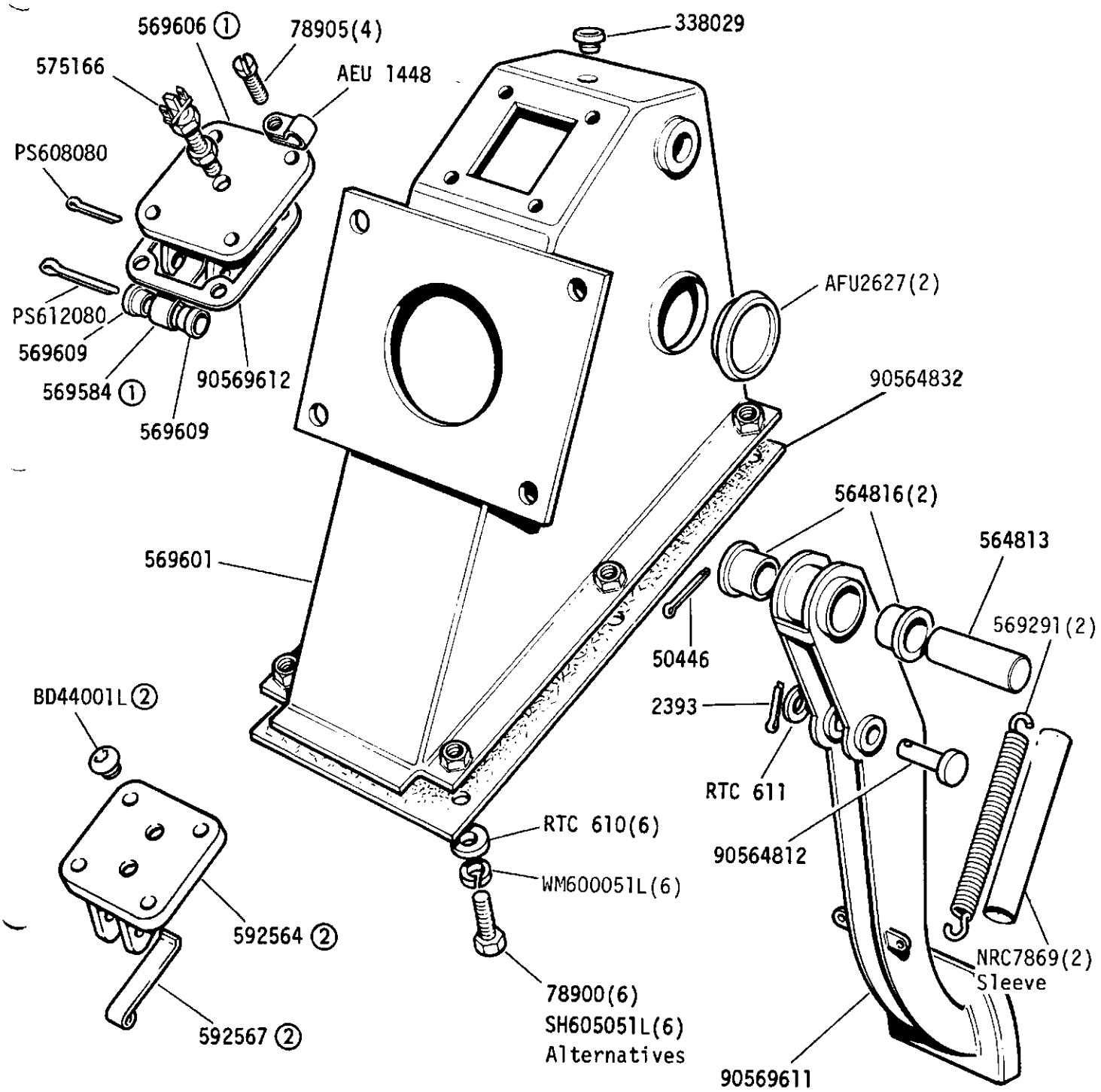

Brake pedal and bracket assembly 569652

① Vehicles with single line brakes
② Vehicles with dual line brakes

GROUP G
BRAKES - Master Cylinder 88in 4 Cylinder and 109in 4 Cylinder

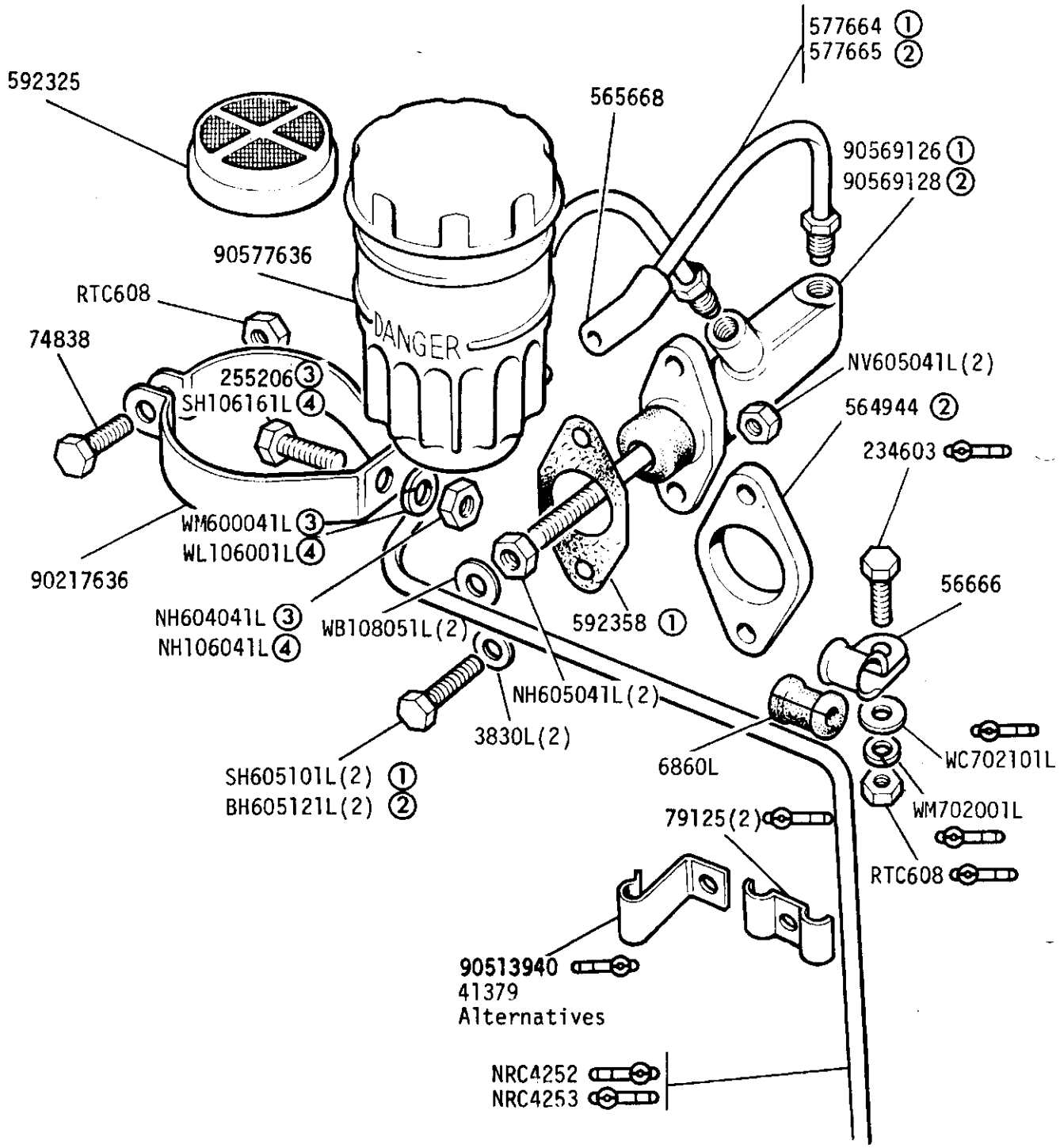

Brake master cylinder overhaul kit 8G8837L ①
Brake master cylinder overhaul kit 90606023 ②
Nylon spacer for master cylinder 569096(2)

① 88in up to June 1980
② 88in from July 1980 and all 109in
③ UNF
④ METRIC

GROUP G

BRAKES - Master Cylinder and Servo, 109 in. 4 cyl. Station Wagon and 109 in. 6 cyl.
Up to June 1980

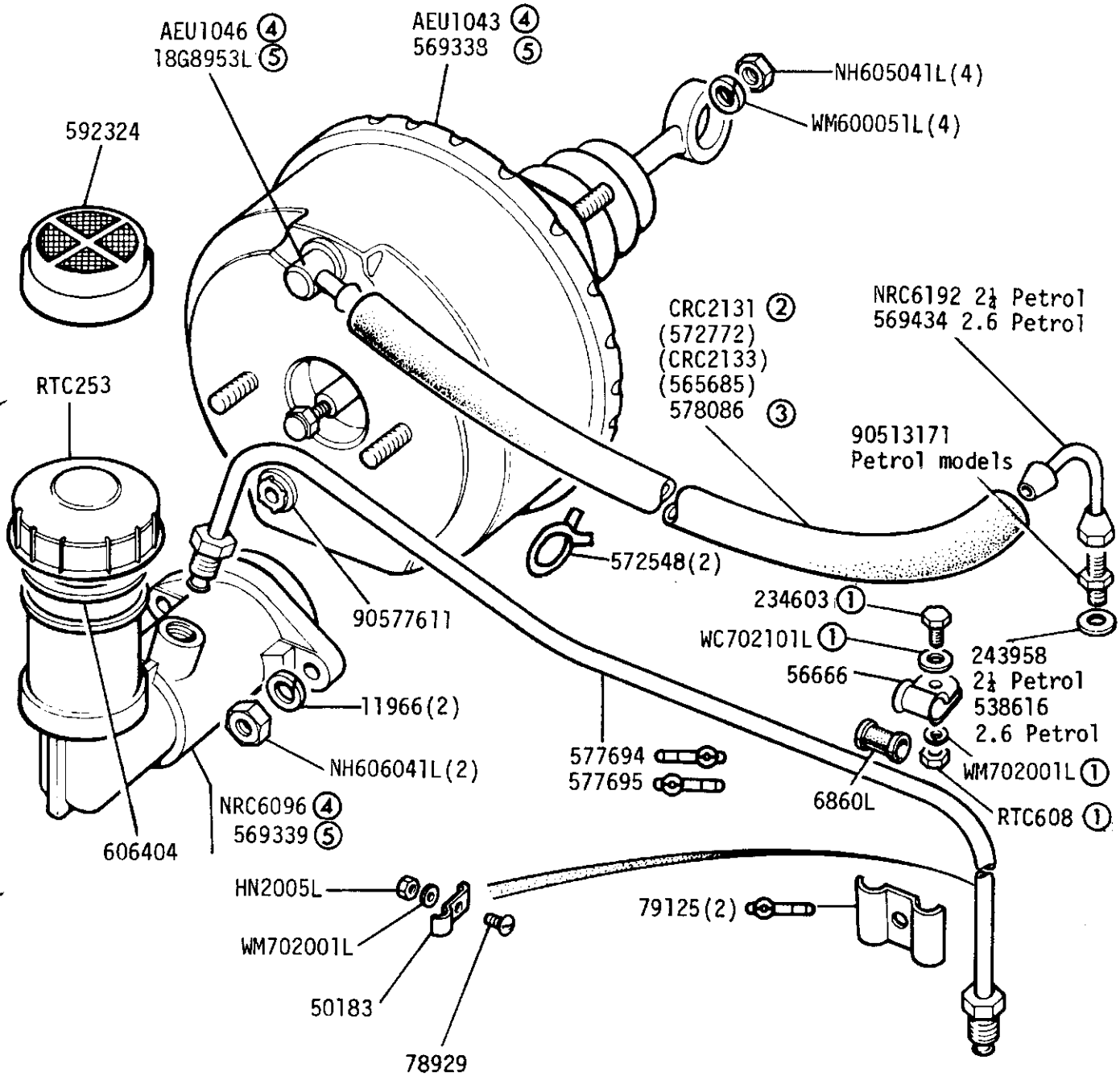

Brake master cylinder overhaul kit 606415 Brake servo minor overhaul kit 18G8951L

① 4 Cylinder

② All vehicles except 2¼ Petrol

③ 2¼ Petrol

④ 109 V8

⑤ Except 109 V8

BRAKES - Brake master cylinder and servo unit - dual line system

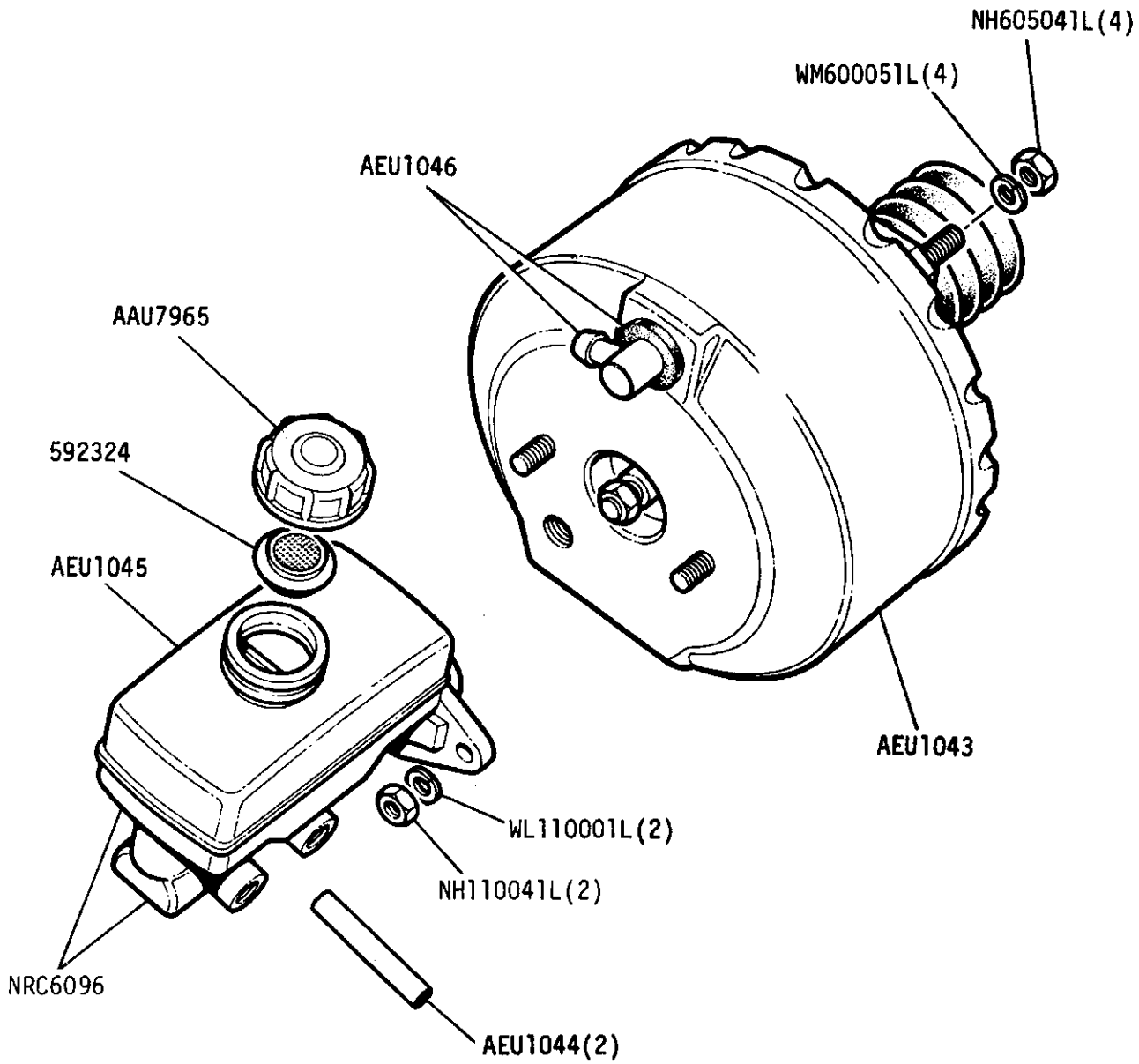

Brake master cylinder repair kit AEU1047
Brake servo unit repair kit 18G8951L

GROUP G

BRAKES - Front pipes - 88in and 109in single line system
Up to June 1980

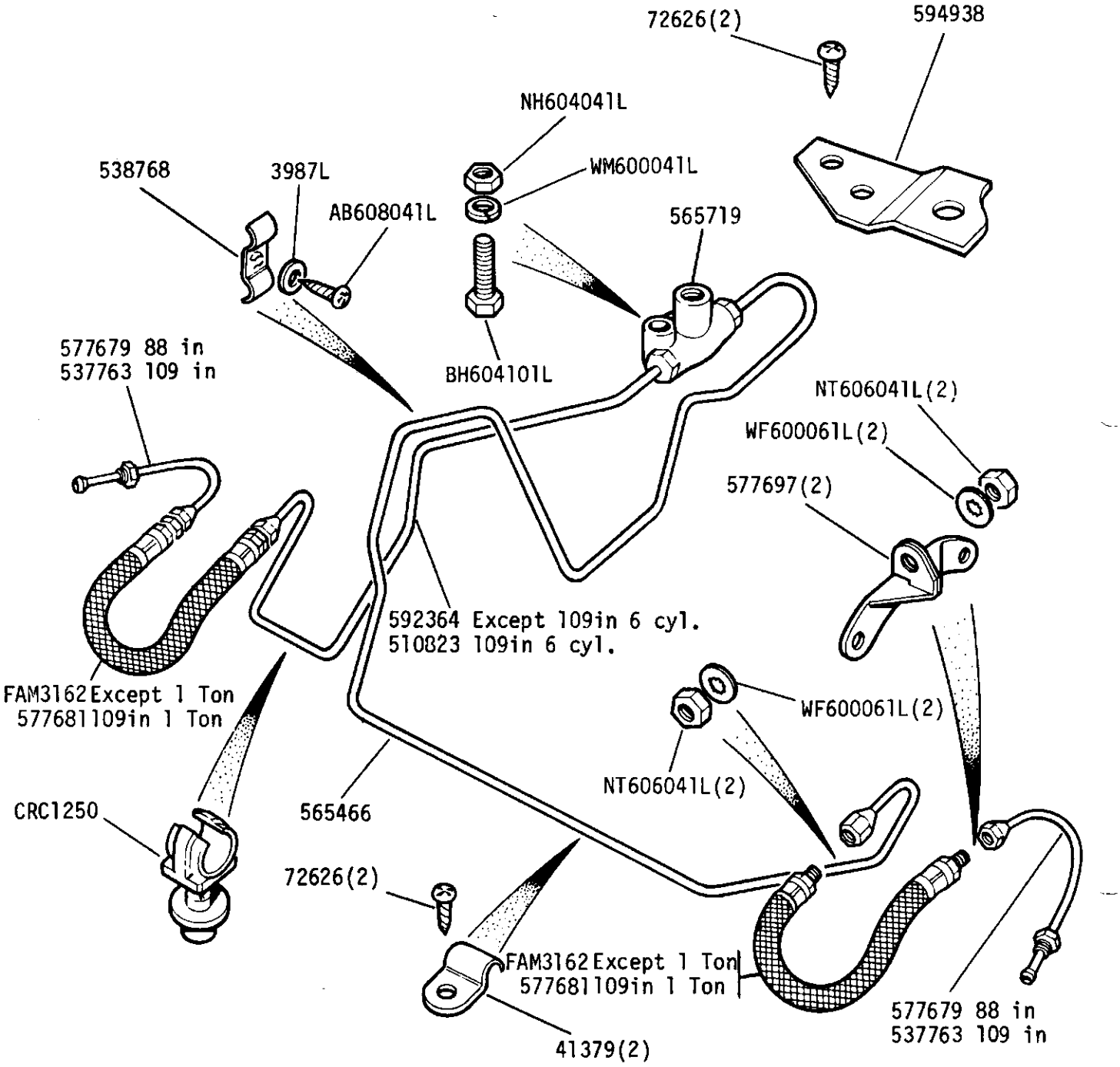

GROUP G

BRAKES - Rear pipes - 88in and 109in single line system
Up to June 1980

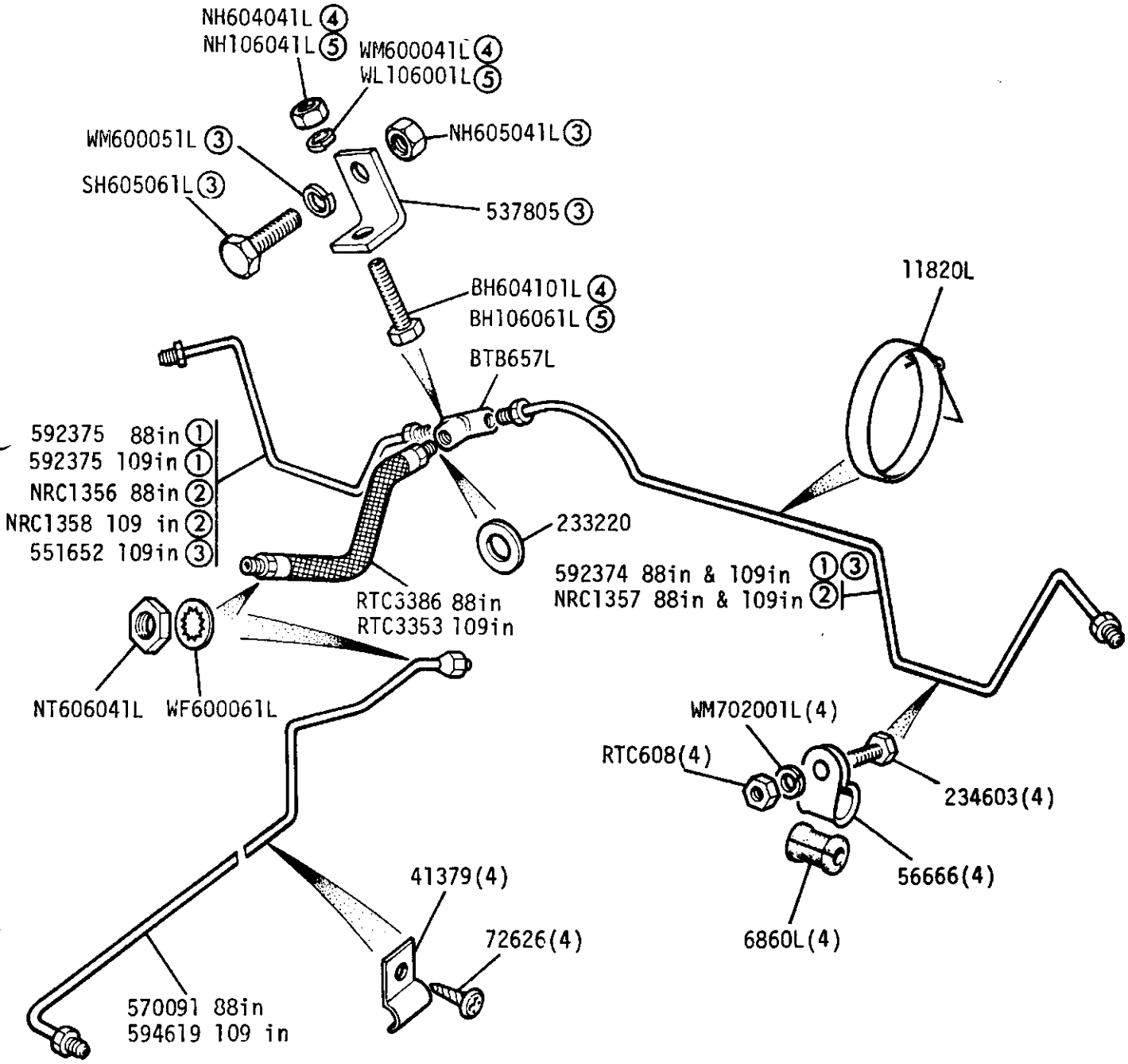

① For vehicles with single silencer exhaust system ② For vehicles with two silencer exhaust system ③ 109in 1 ton ④ UNF ⑤ METRIC	Check before ordering

GROUP G
BRAKES - Front Pipes
88in and 109in single line system
From July 1980 onwards

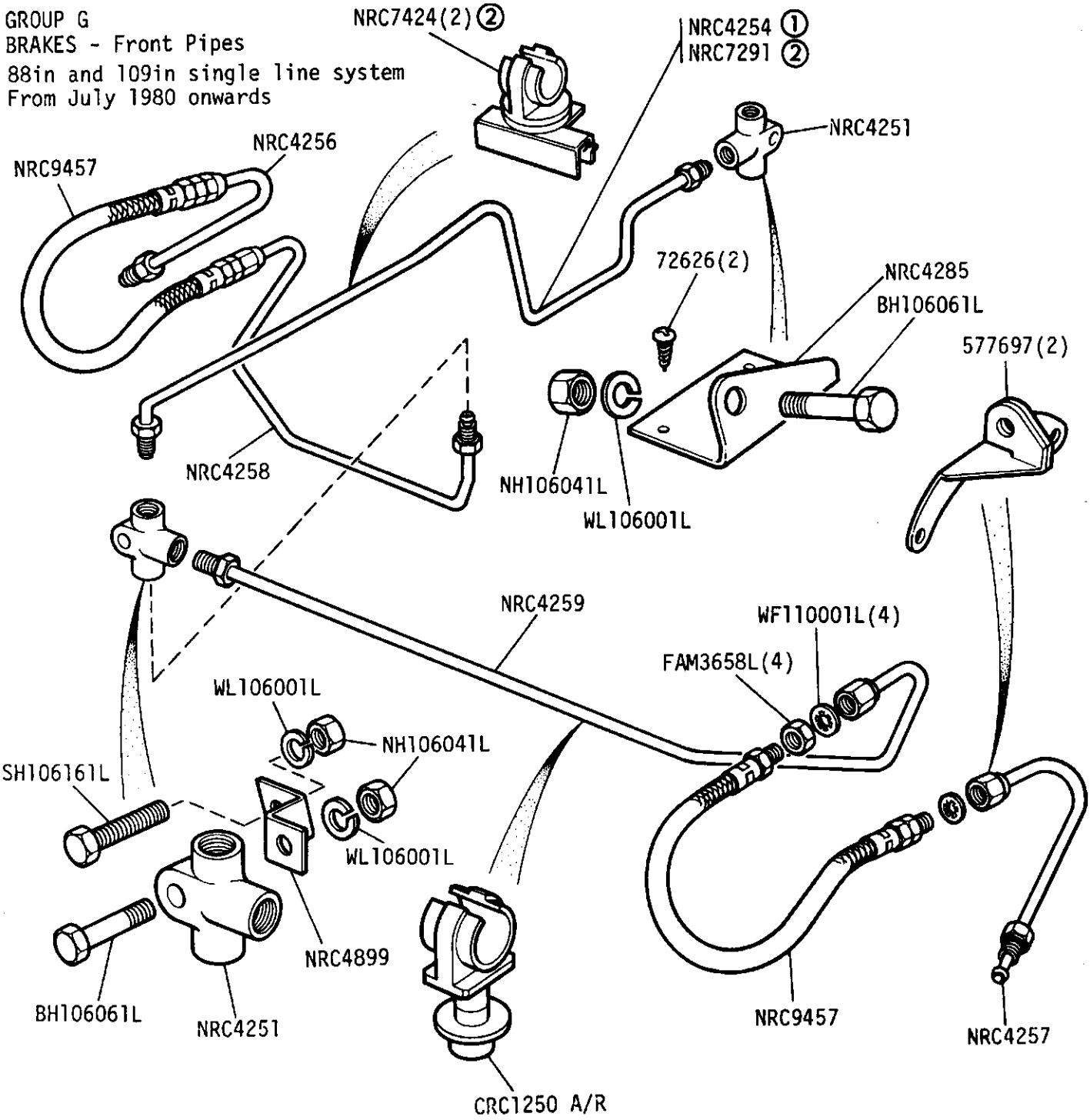

① Fitted upto October 1982
② Fitted from November 1982 onwards

BRAKES - Rear Pipes - 88in and 109in single line system
From July 1980 onwards

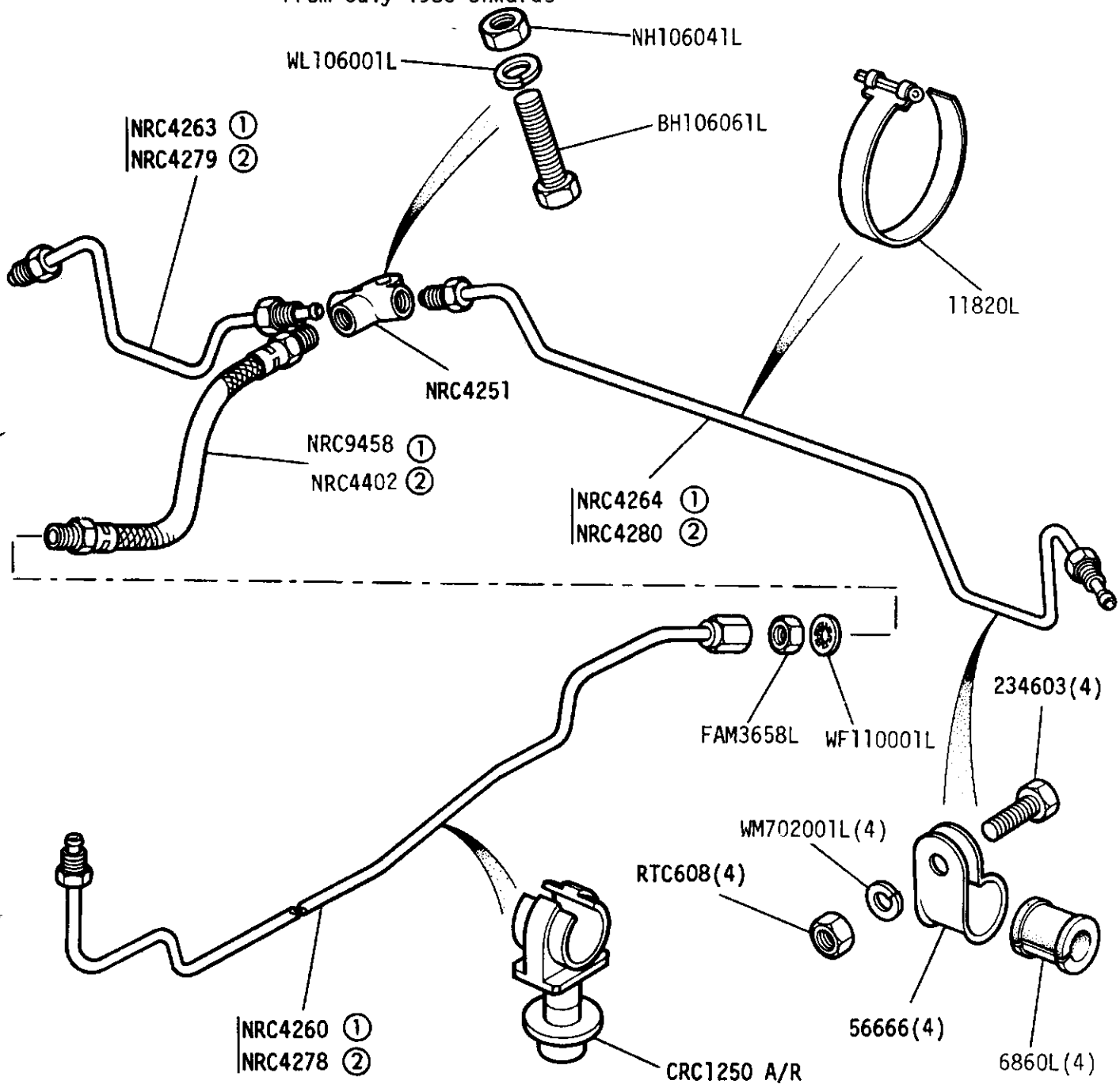

① 88in
② 109in

GROUP G
BRAKES - Front pipes - 88in and 109in dual line system

From July 1980 onwards

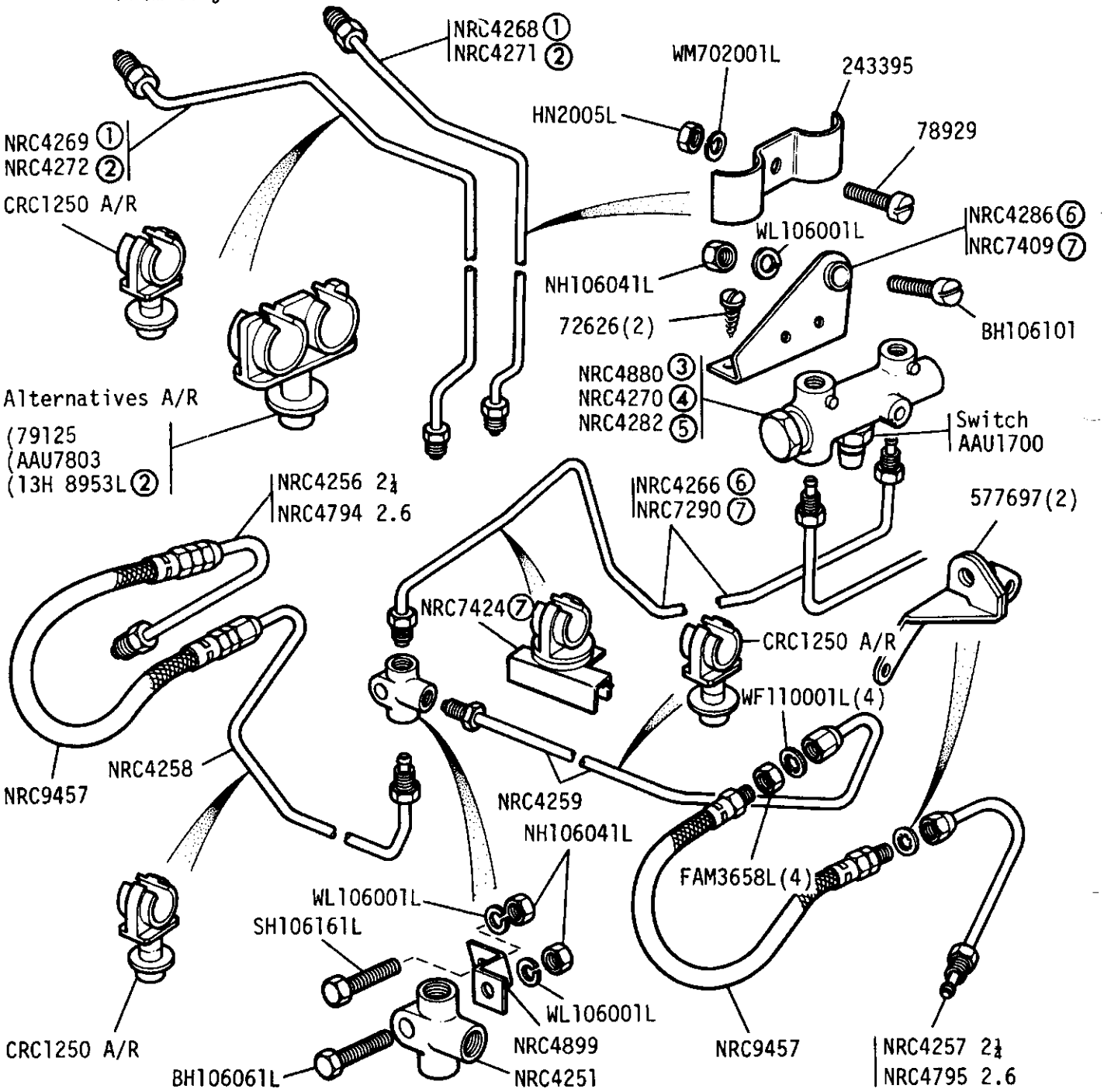

① RH Stg
② LH Stg
③ 88in Basic upto SALLBDAH1AA193068 and all 109in Basic
④ 88in Station Wagon and all 88in from SALLBDAH1AA193069
⑤ 109in Station Wagon
⑥ Upto October 1982
⑦ From November 1982

GROUP G

BRAKES - Rear pipes - 88in and 109in dual line system
From July 1980 onwards

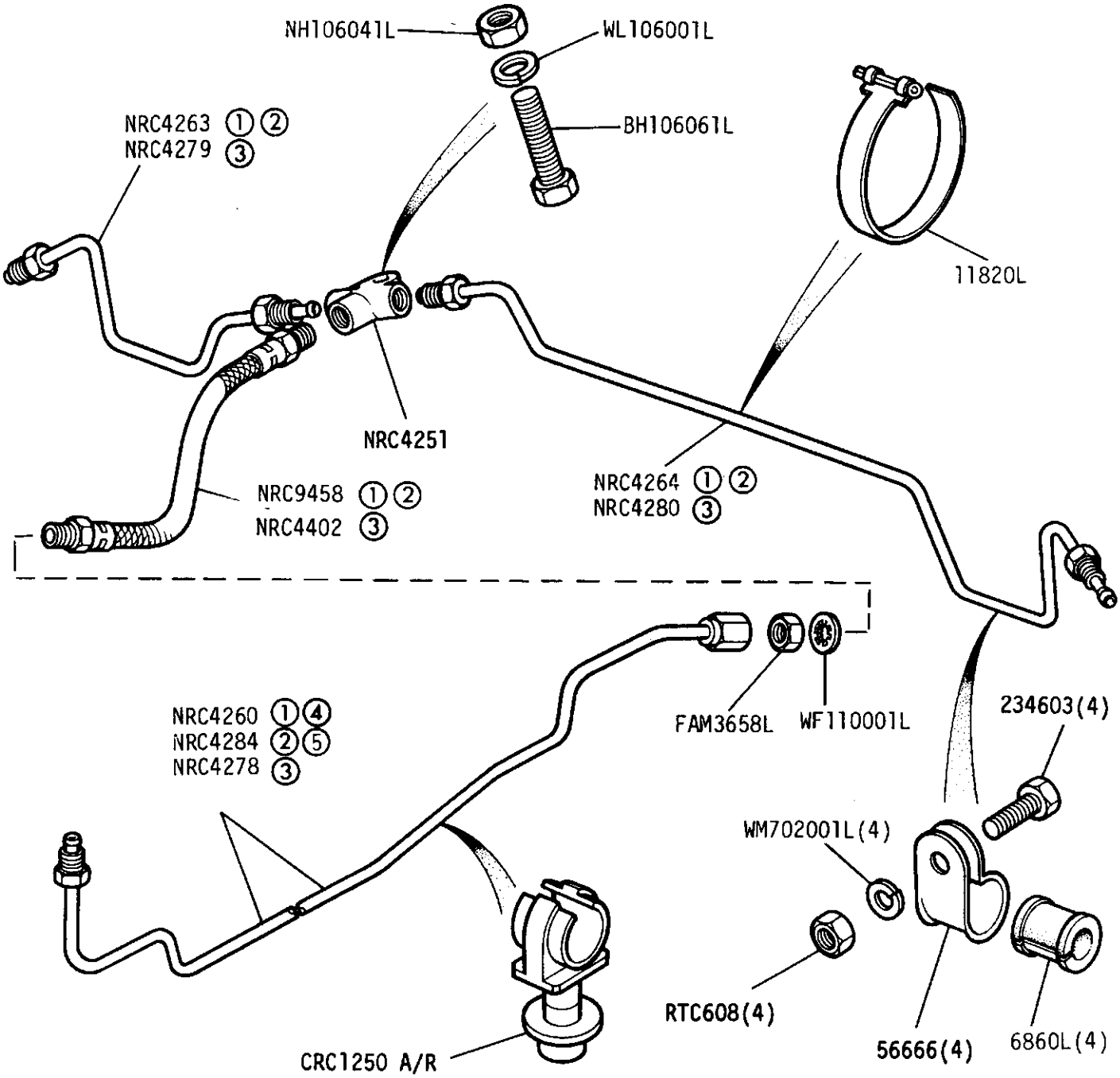

① 88in Basic
② 88in Station Wagon
③ 109in
④ Fitted upto SALLBDAH1AA193068
⑤ All 88in from SALLBDAH1AA193069

GROUP G
BRAKES - Front pipes - 109V8
Up to June 1980

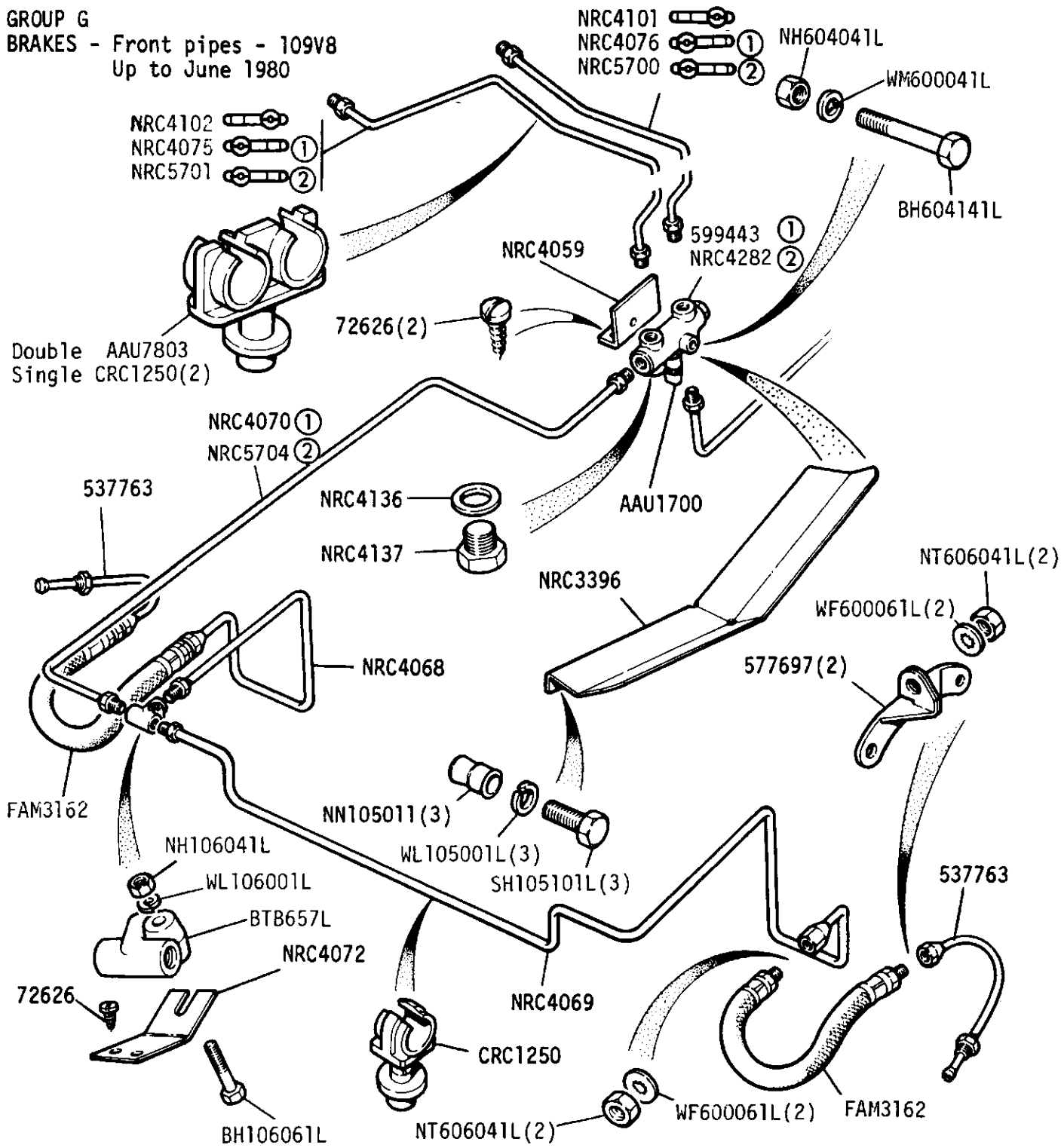

① Except LHD Station Wagon for EEC Countries
② LHD Station Wagon for EEC Countries

GROUP G
BRAKES - Rear Pipes - 109V8 Up to June 1980

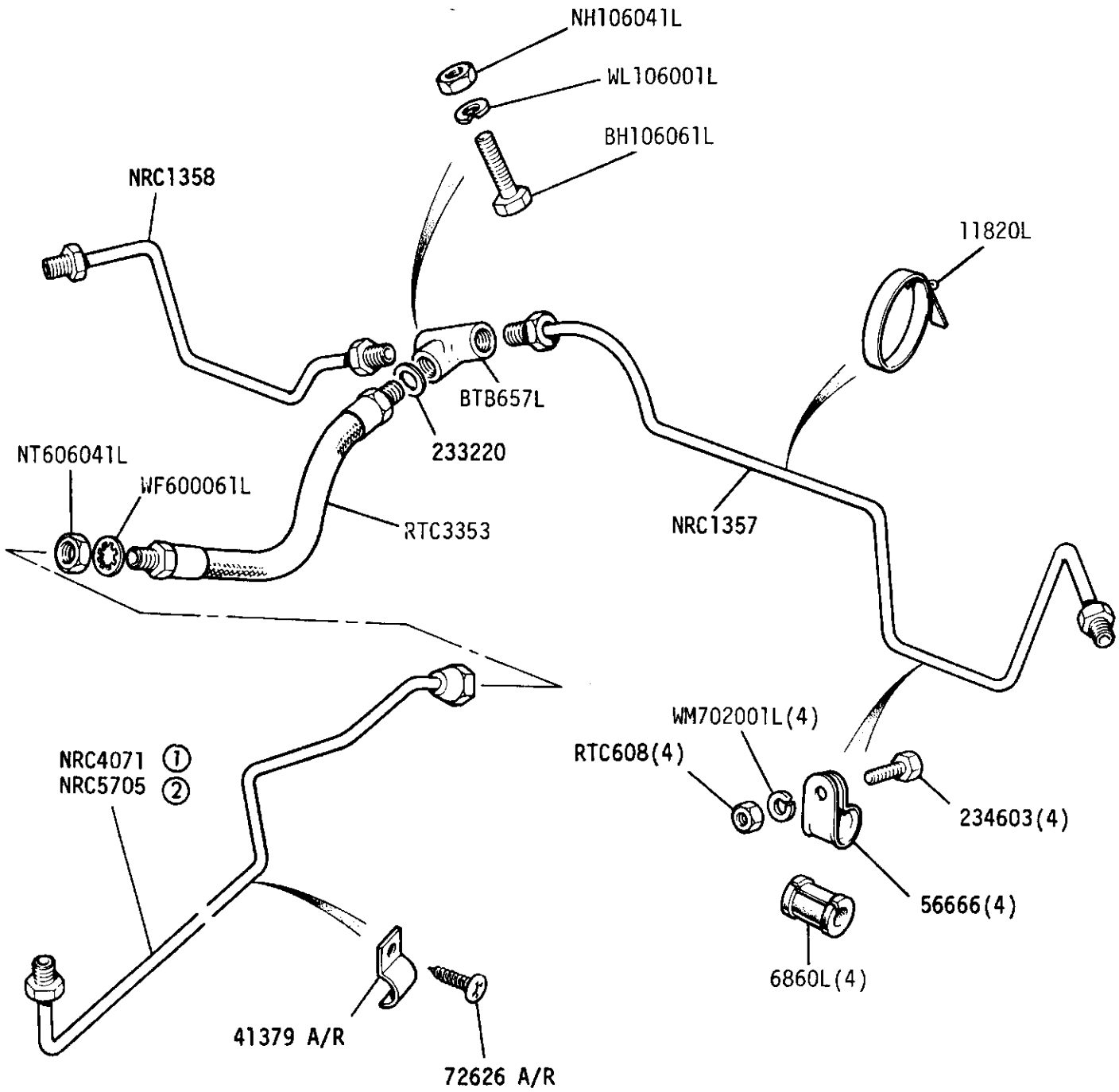

① Except LHD Station Wagon for EEC Countries
② LHD Station Wagon for EEC Countries

GROUP G

BRAKES - Front pipes - 109 V8
From July 1980 onwards

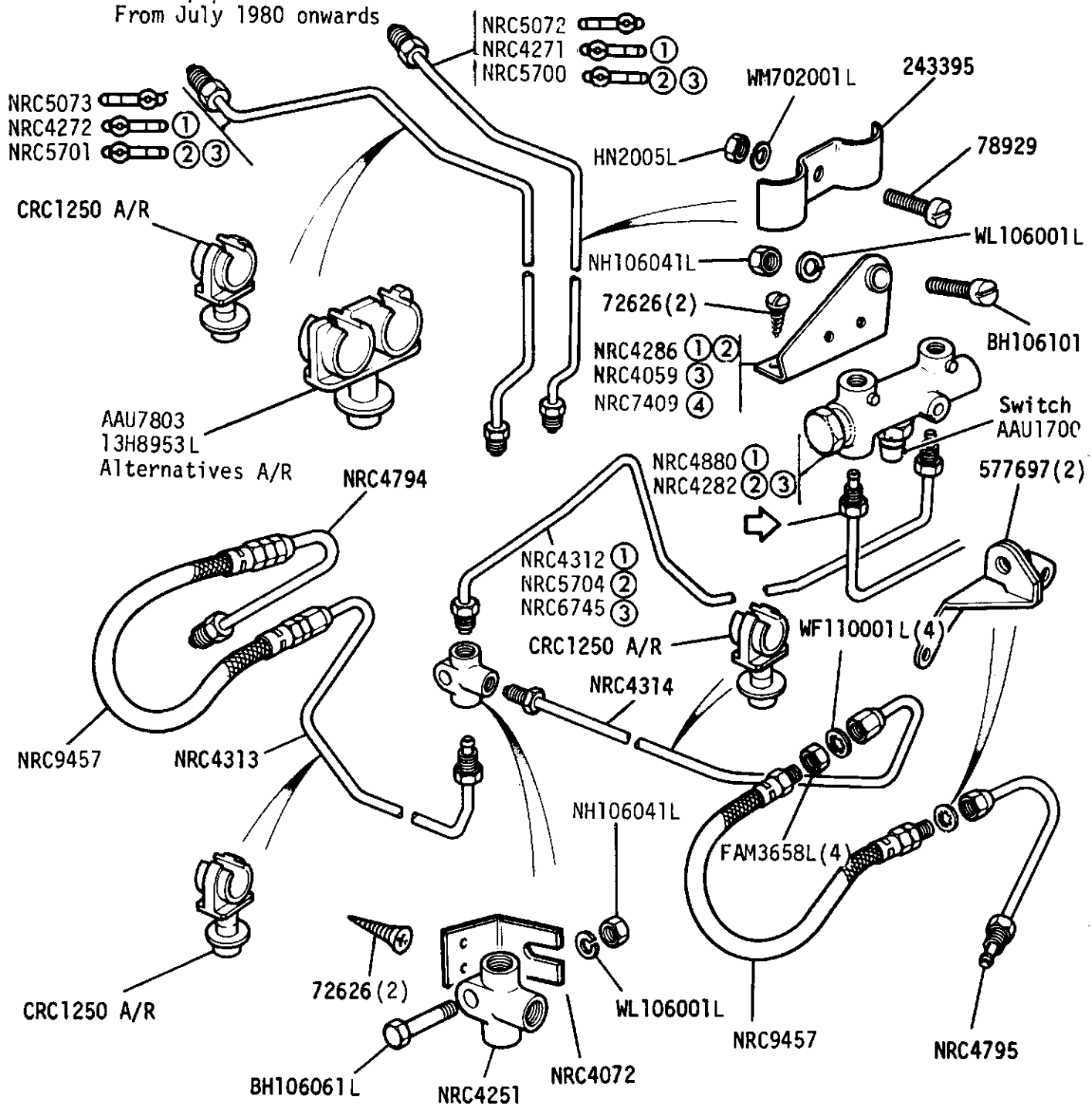

① Except LHD Station Wagon for EEC Countries.

② LHD Station Wagon for EEC Countries - Up to December 1980

③ LHD Station Wagon for EEC Countries - from January 1981

④ All vehicles from November 1982

BRAKES - Rear pipes - 109 V8
From July 1980 onwards

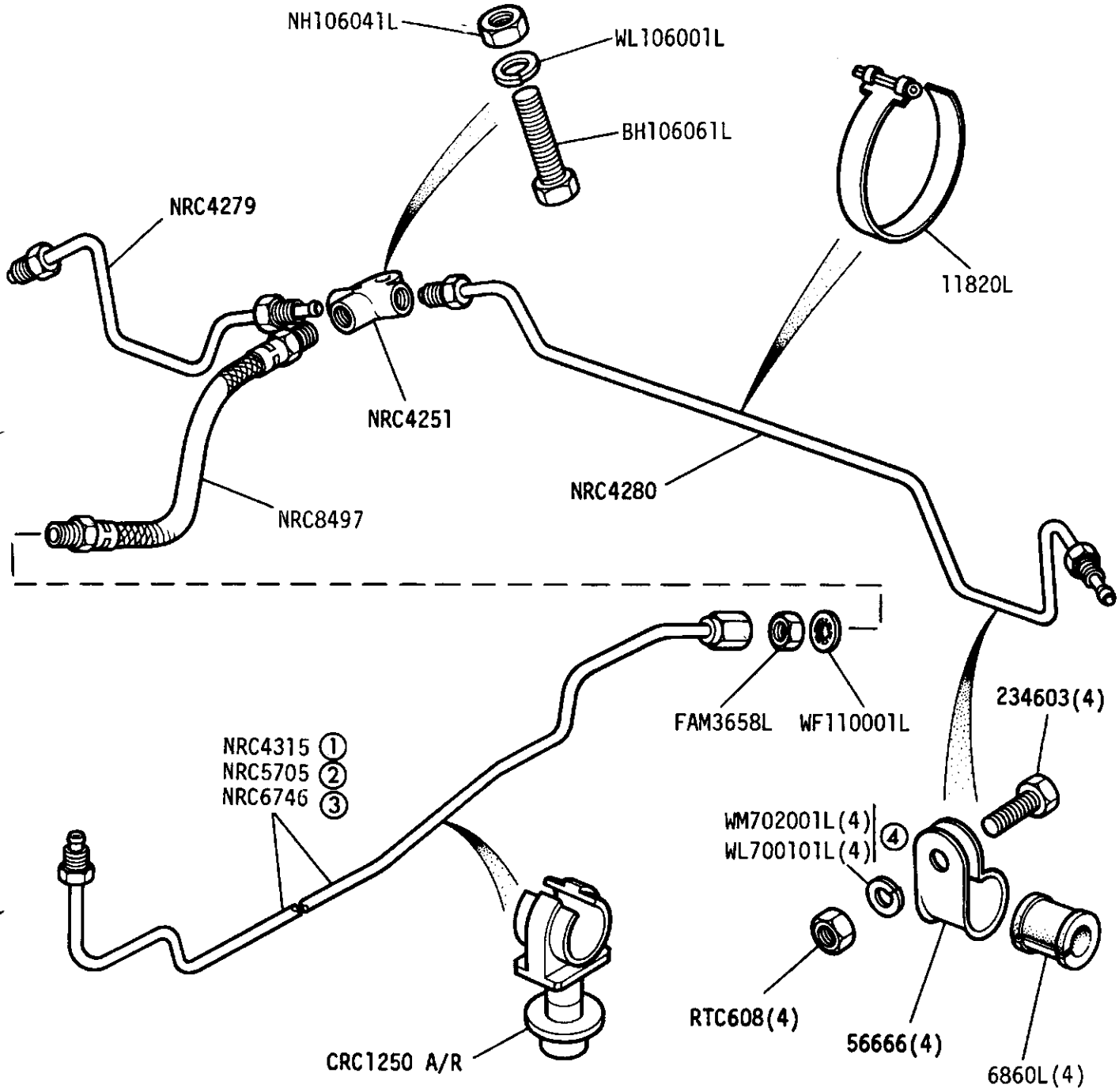

① Except LHD Station Wagon for EEC Countries.

② LHD Station Wagon for EEC Countries - Up to December 1980

③ LHD Station Wagon for EEC Countries - from January 1981

④ ALTERNATIVES

GROUP G

HANDBRAKE LEVER

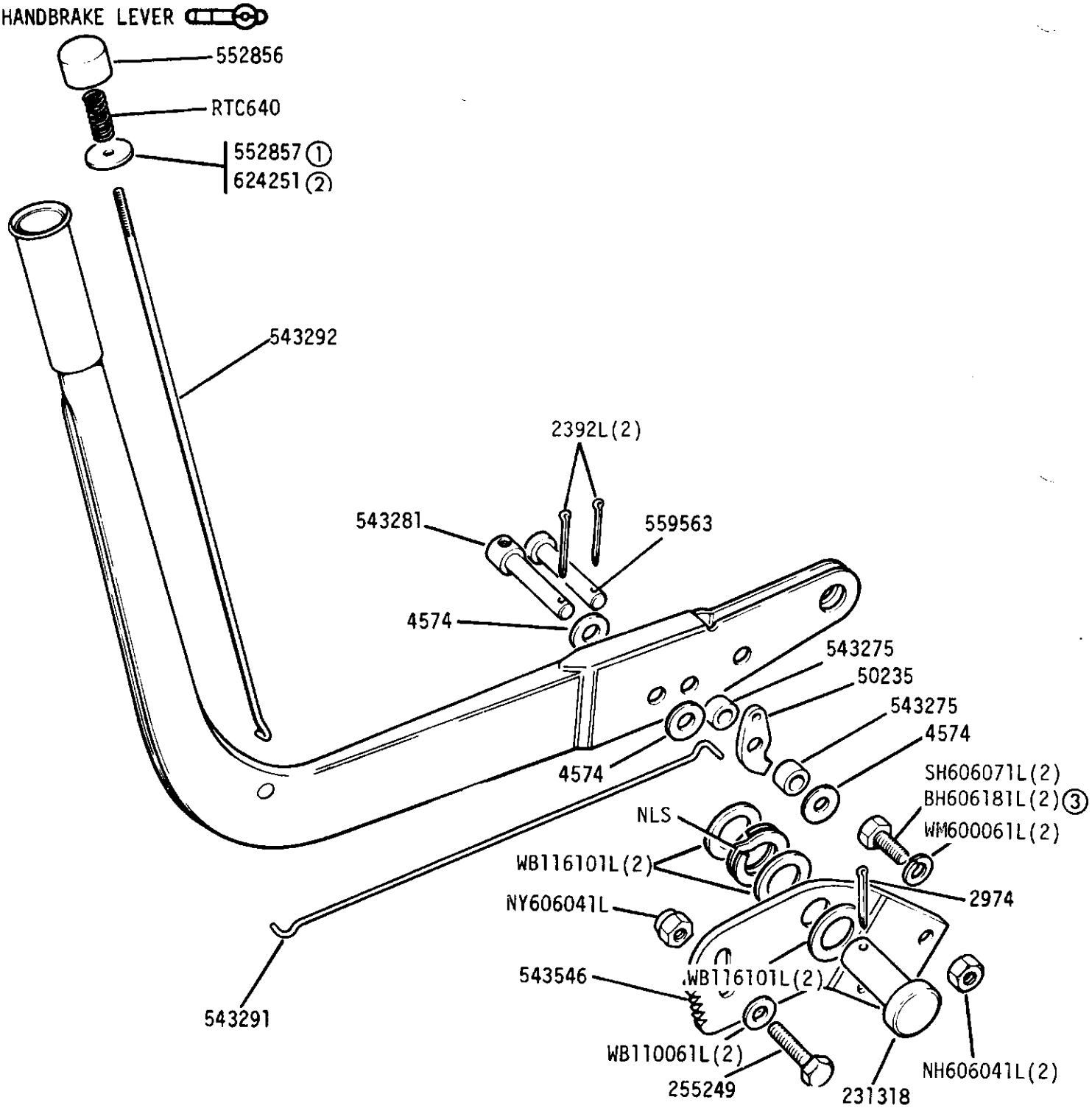

Handbrake lever assembly 624252

① Steel

② Nylon

③ 109 2¼ Petrol only

GROUP G

HANDBRAKE LEVER

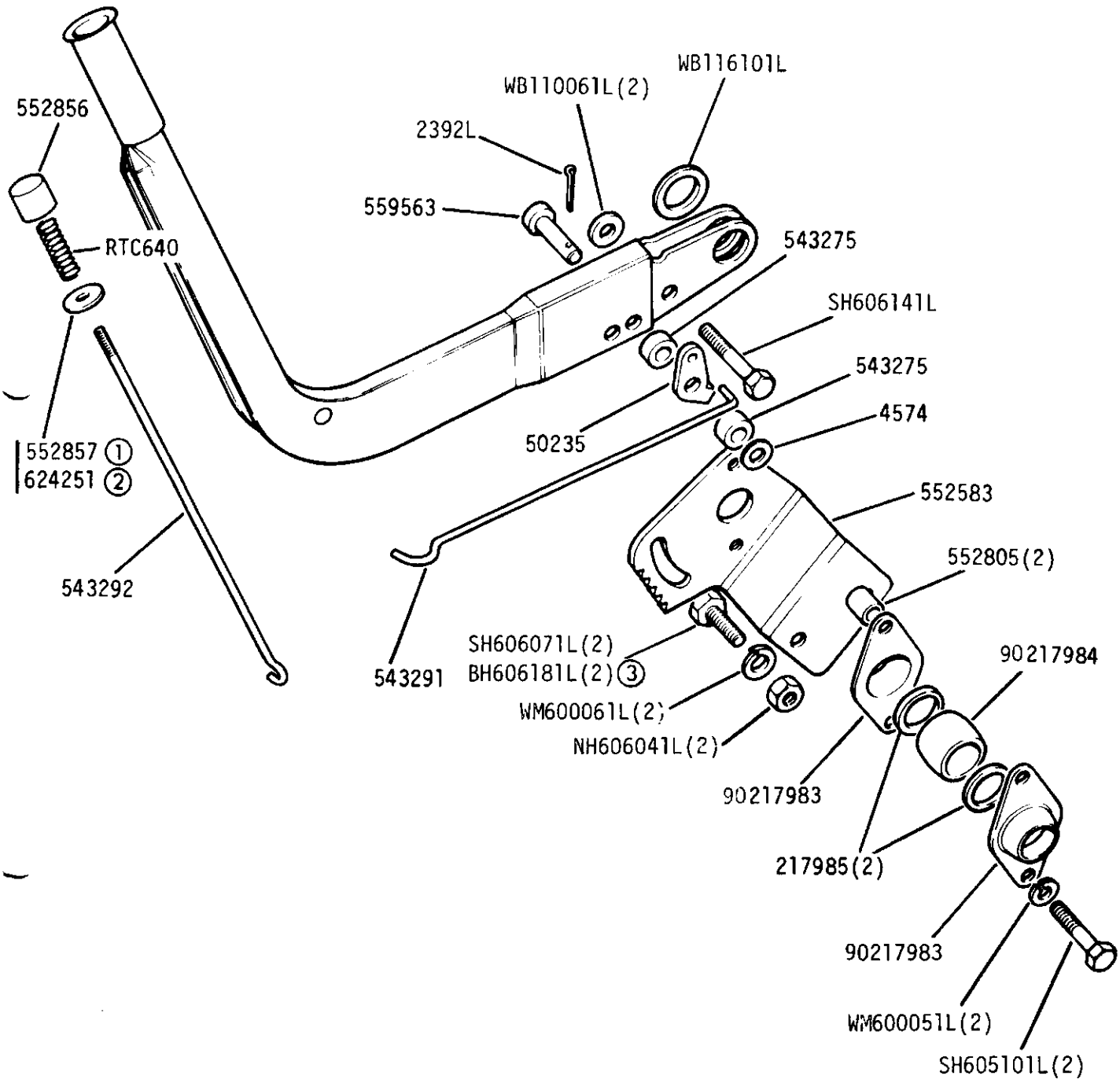

Handbrake lever assembly 624262

① Steel

② Nylon

③ 109 2¼ Petrol only

GROUP G

BRAKES - Handbrake Cross Shaft

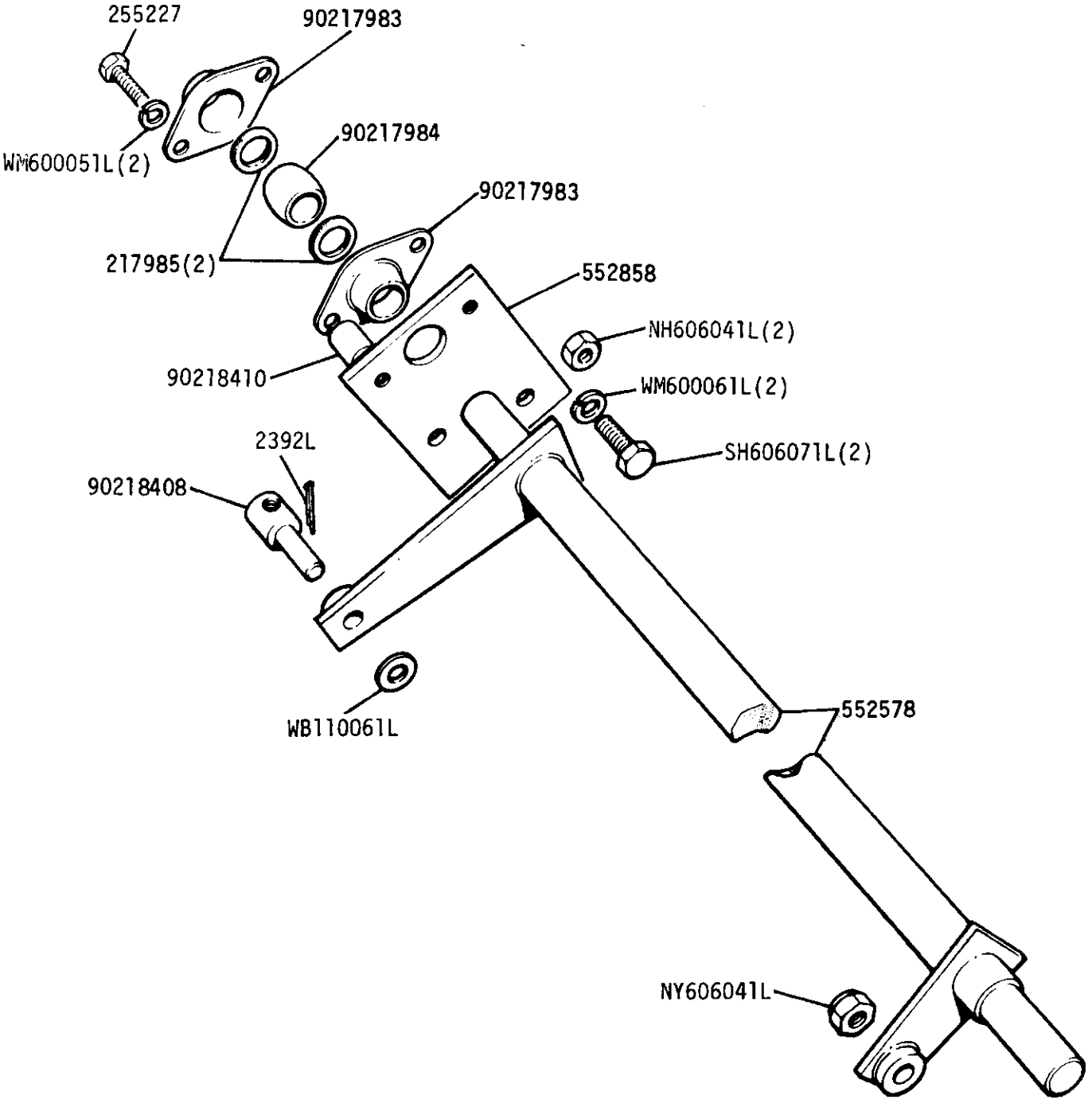

GROUP G
BRAKES - Relay Lever for Hand Brake

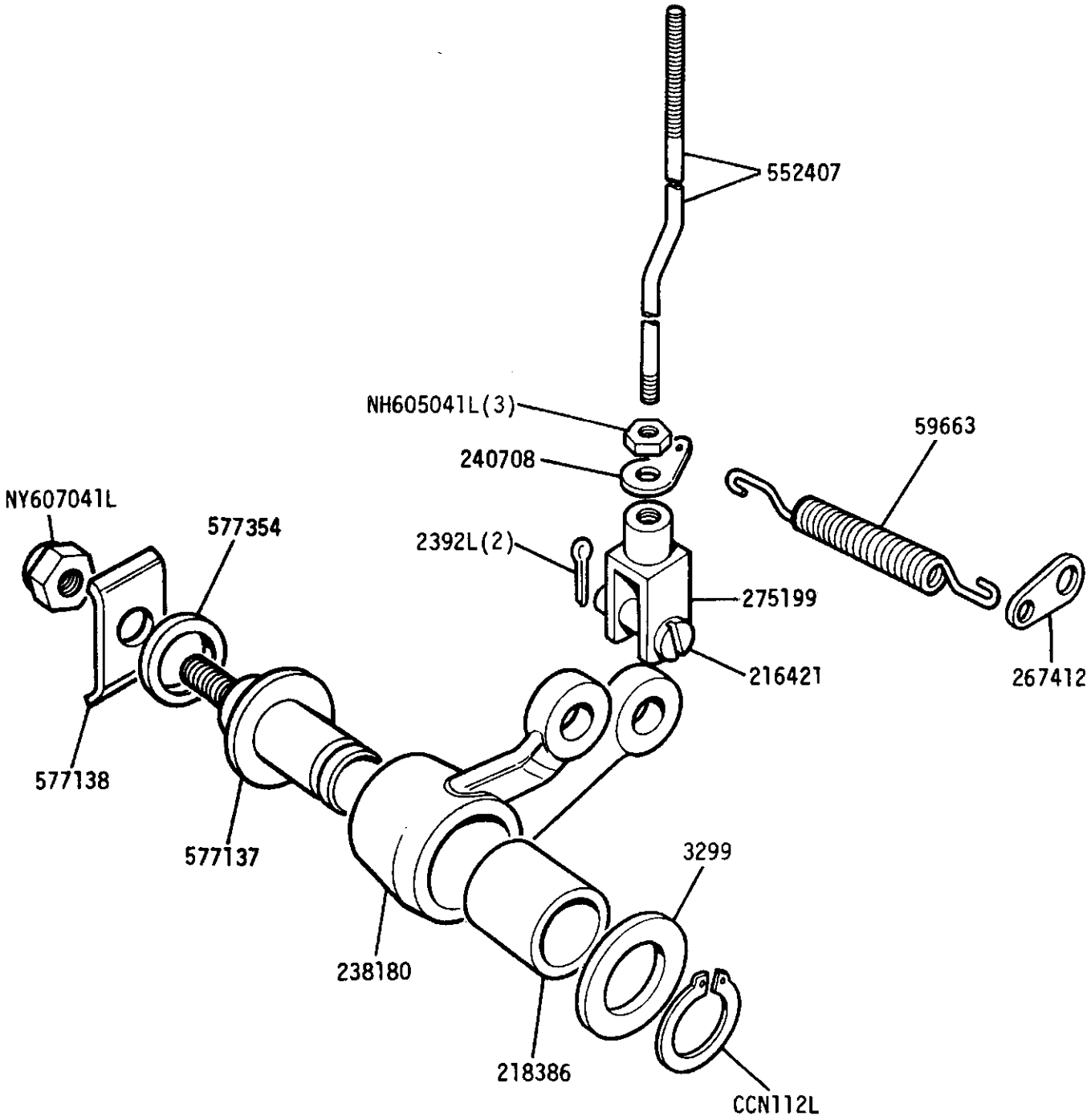

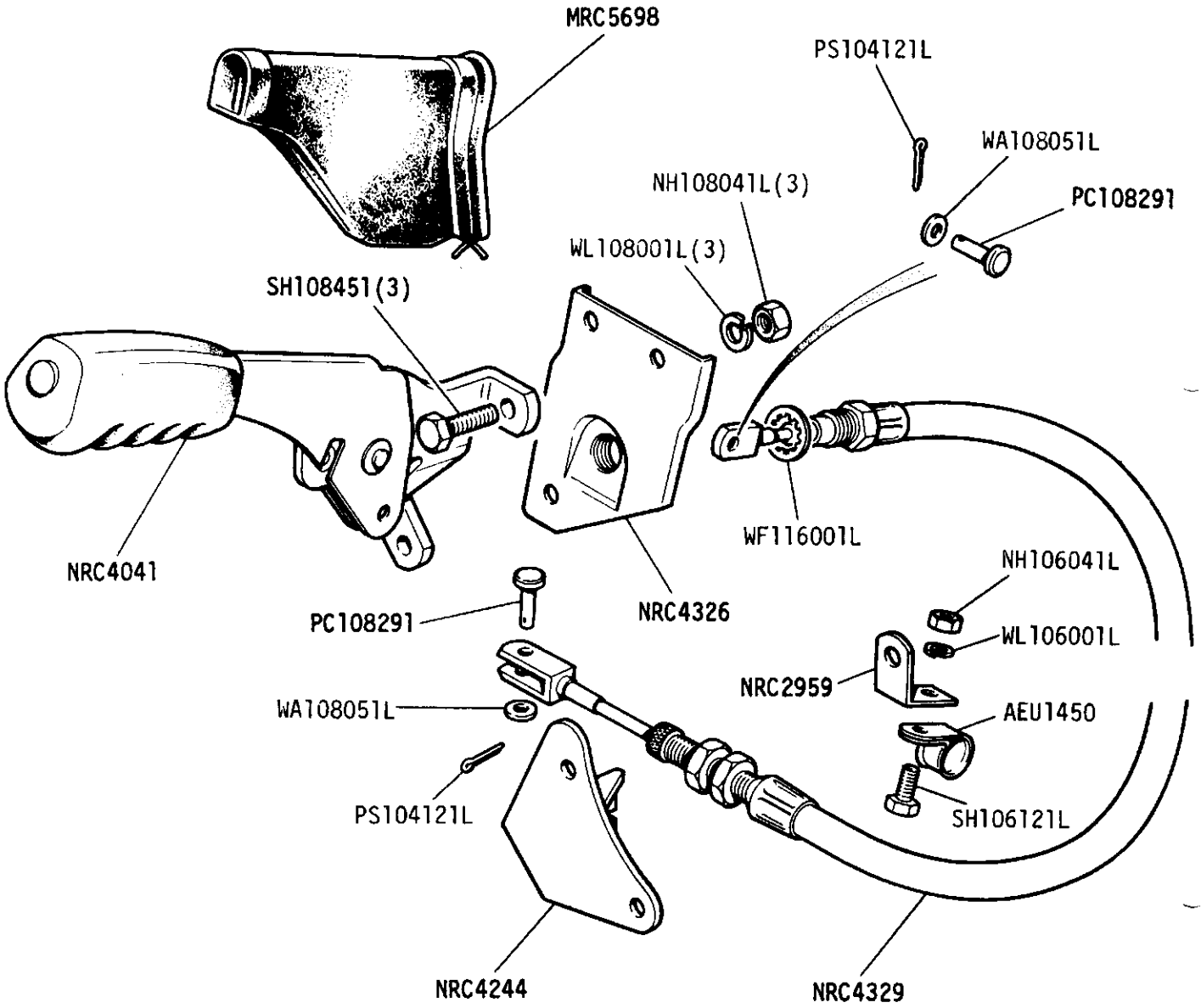

Blanking plug - AFU1174

ENGINE - Top Cover - Carburetter 2¼ Litre Petrol

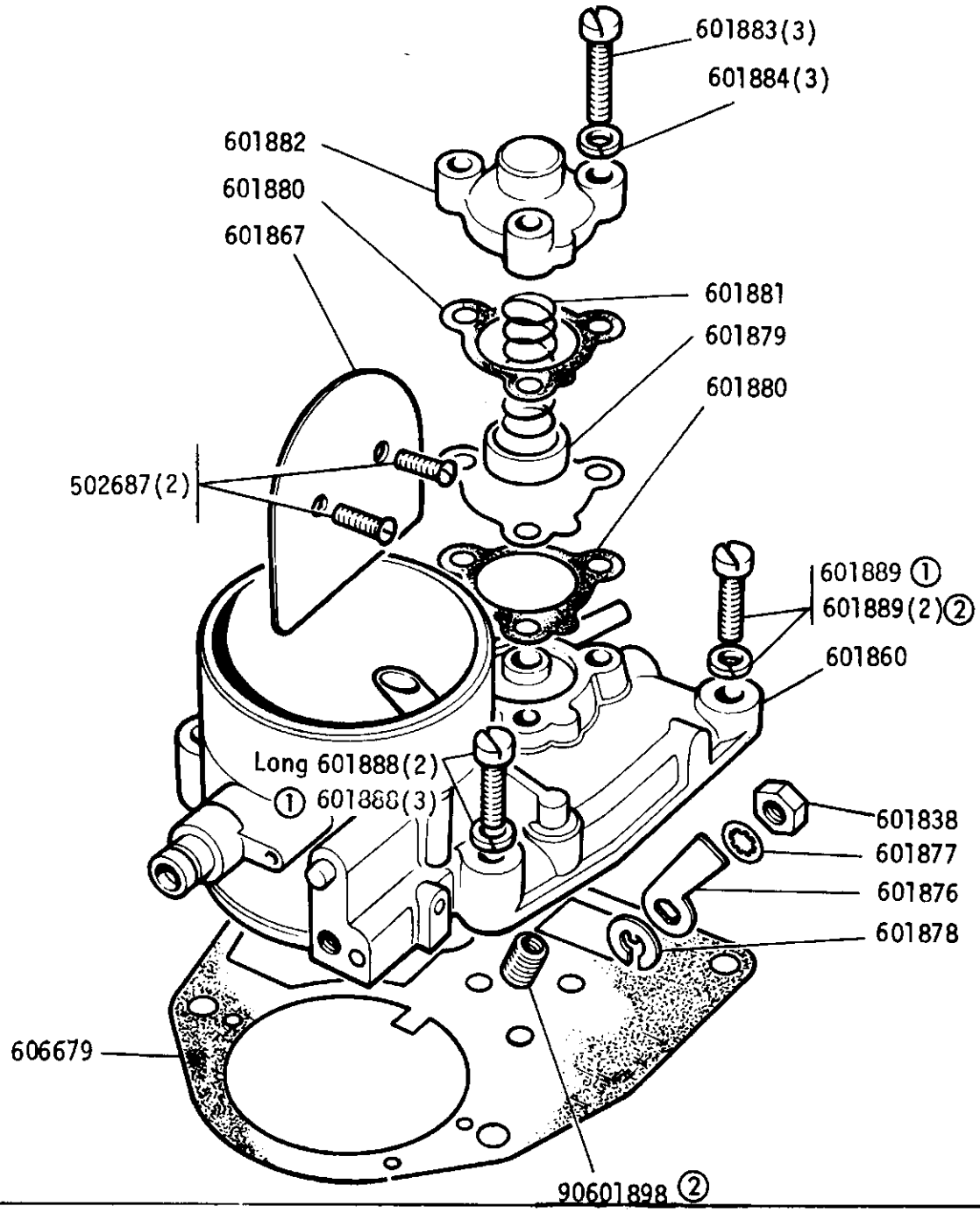

Carburetter complete ERC2886 except Switzerland and Norway
Carburetter overhaul kit (Zenith 3888) 605092
Carburetter overhaul kit (Zenith 4085) AEU4003
Carburetter complete ERC4419 Switzerland and Norway only
① Carburetter complete ERC6572 - European detoxed ECE15-03 up to engine 36116817A
Carburetter complete ERC8634 - European detoxed ECE15-03 from engine 36116817A
② Not required on ERC6572 and ERC8634
Carburetter gasket kit 605093
Tamperproof parts kit AAU8782

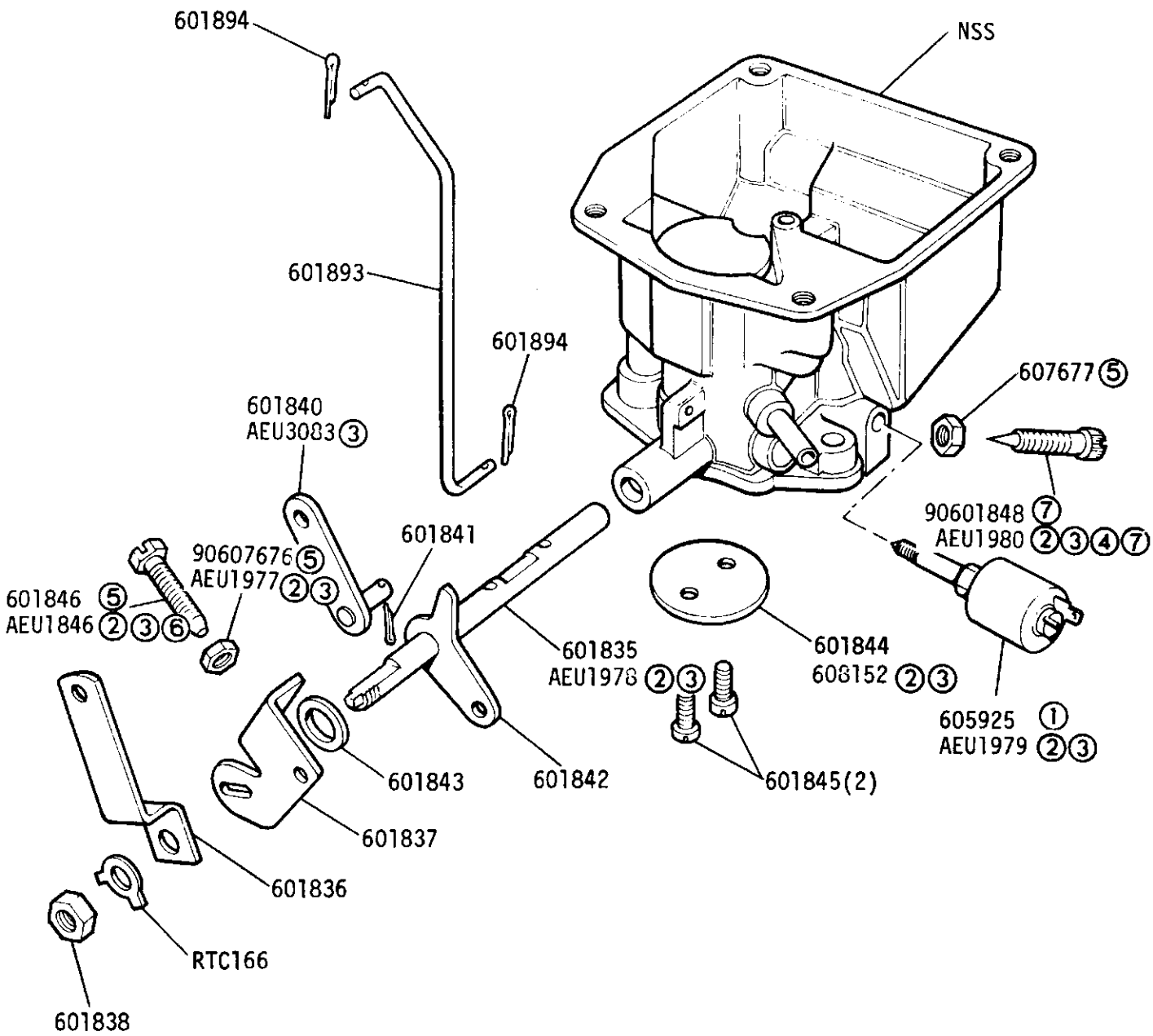

① Optional

② Use with carburetter ERC6572

③ Use with carburetter ERC8634

④ Also use Spring 90601849

⑤ Not required for carburetters ERC6572 and ERC8634

⑥ Adjusting Tool AEU3081

⑦ Carburetter ERC2886 has alternative volume control screws, the earlier type - Zenith number 3888 is fitted with screw 90601848 and locknut 607677. The later type carburetter, Zenith number 4085 is fitted with screw AEU1980 and spring 90601849.

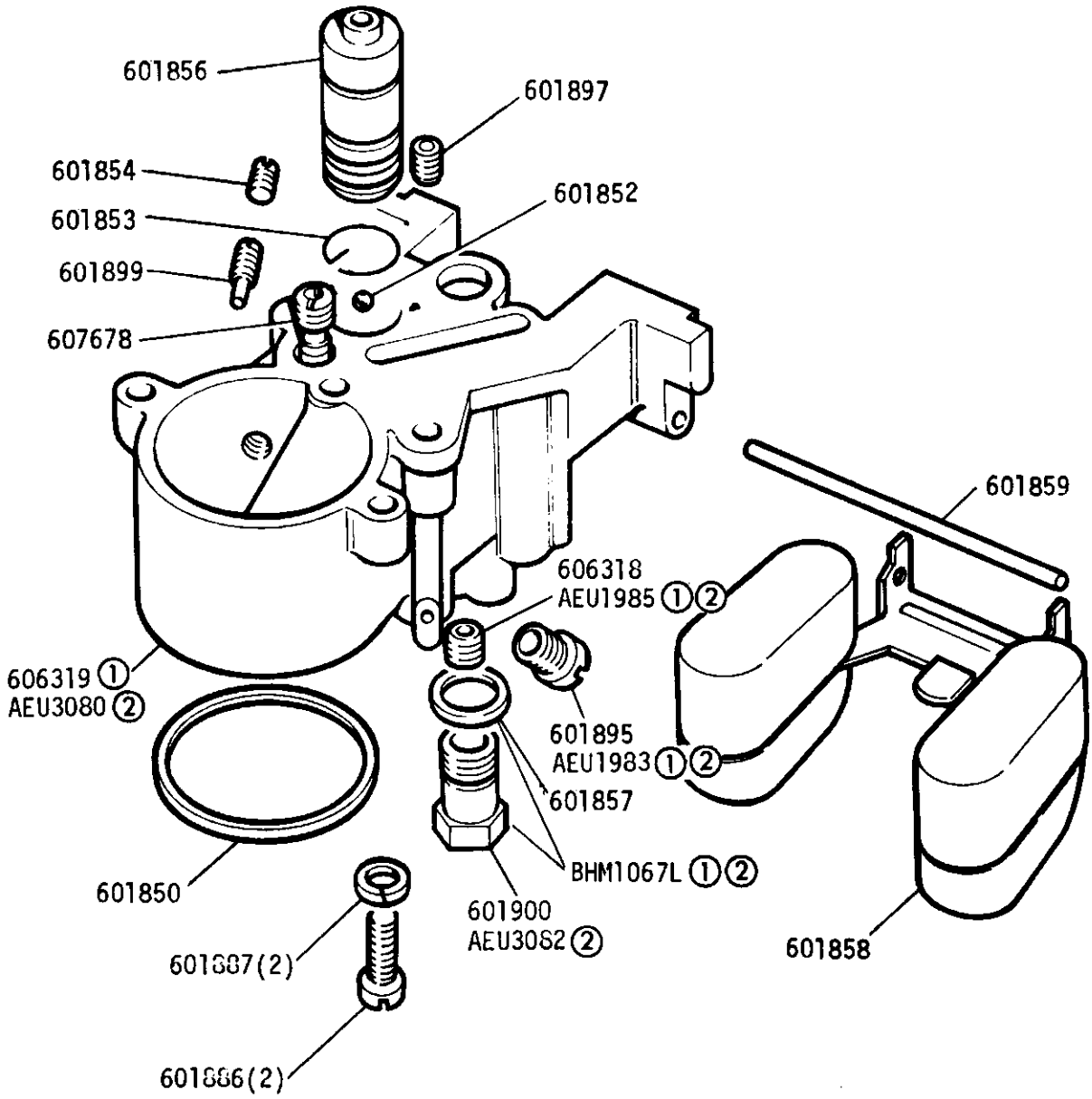

Carburetter settings which may be advantageous for high altitudes

Main jet (120) 605683	5,000 to 7,000 ft
Main jet (117.5) 605684	7,000 to 9,000 ft
Main jet (115) 605685	9,000 to
Slow running jet (55) 605687	12,000 ft
Main jet (112.5) 605686	12,000 to
Slow running jet (55) 605687	14,000 ft

① Use with carburetter ERC6572
② Use with carburetter ERC8634

GROUP H

GINE - Choke Spindle and Levers - Carburetter 2¼ Litre Petrol

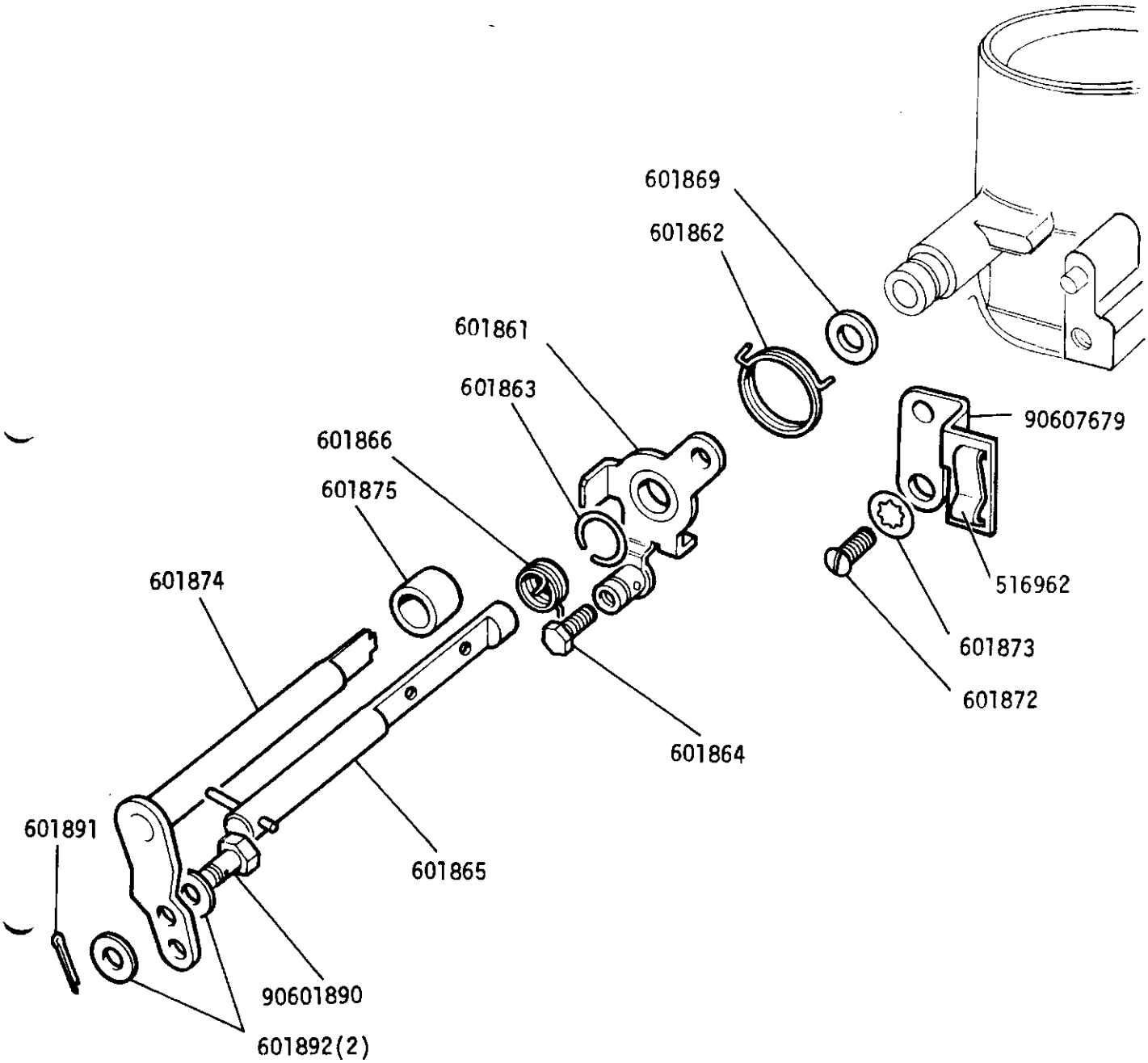

GROUP H
ENGINE. Carburetter suction pipes 2¼ litre petrol

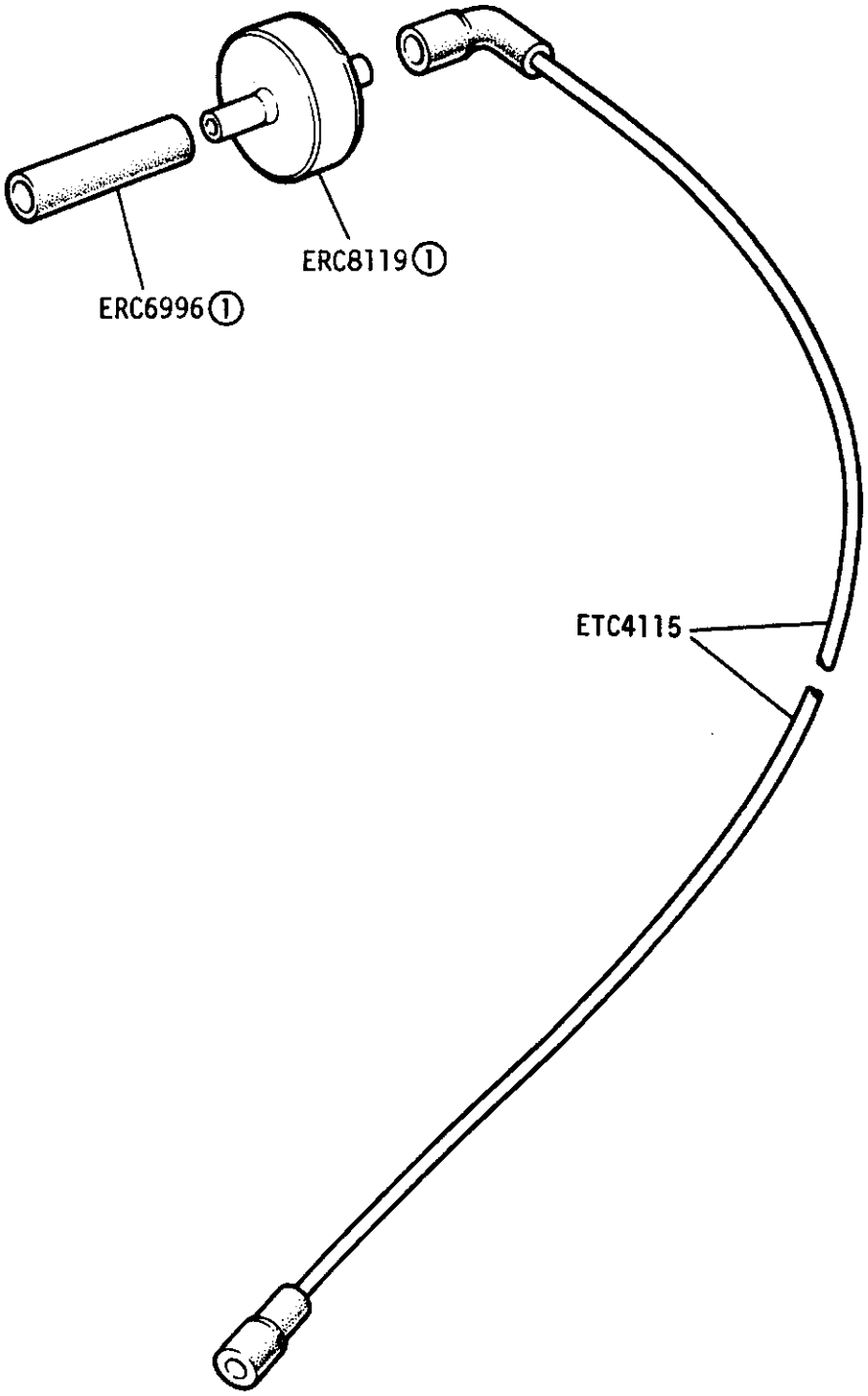

① Detoxed engines only

GROUP H
ENGINE - Carburetter Fixings 2¼ Litre Petrol

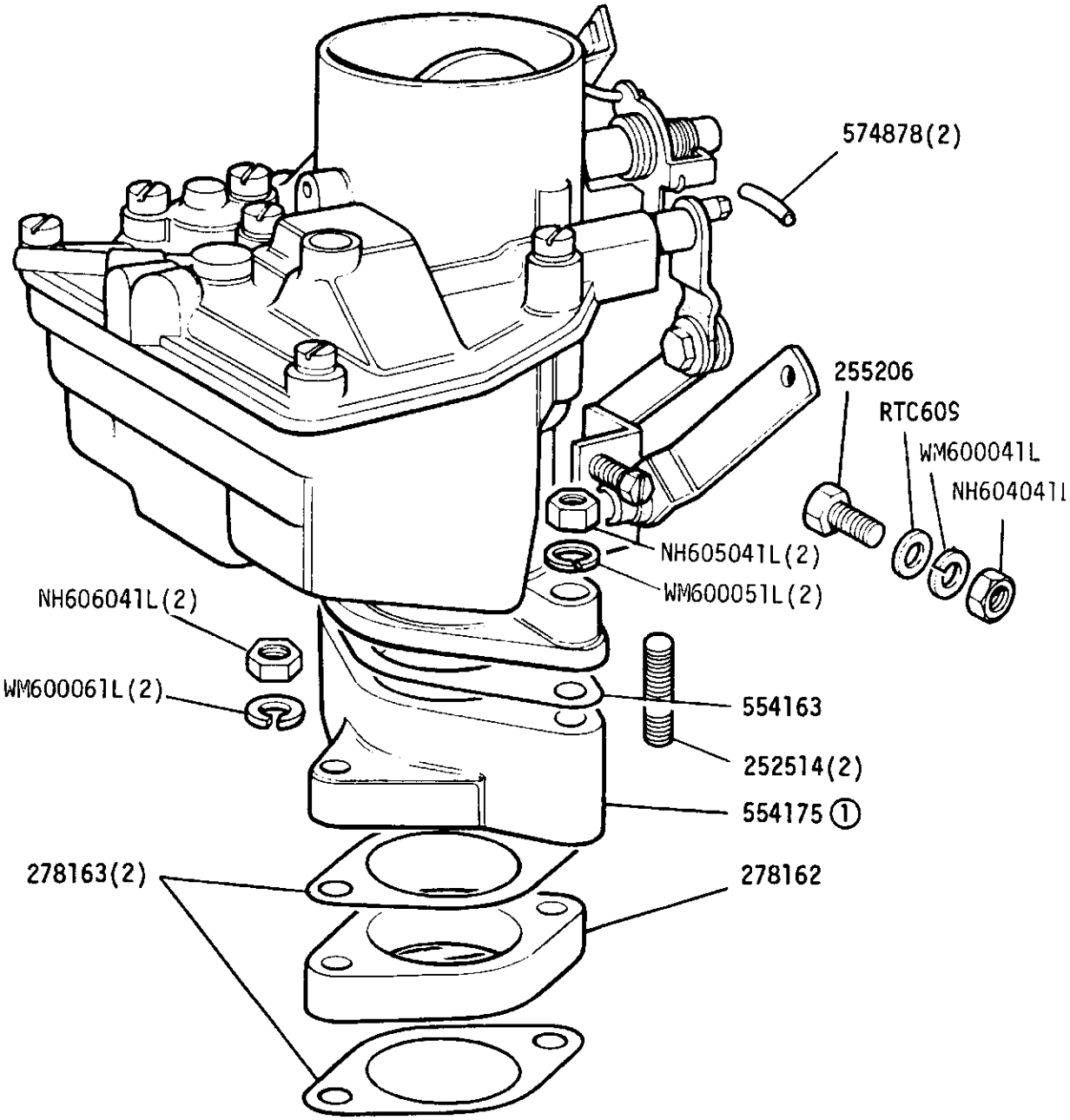

① Up to Engine suffix 'B' inclusive
From Engine suffix 'C' see frame 1C 08 - 1C 09

GROUP H
ENGINE - Carburetter Top Cover, Damper and Air Valve 2.6 Litre Petrol
Up to Engine Suffix 'B' inclusive

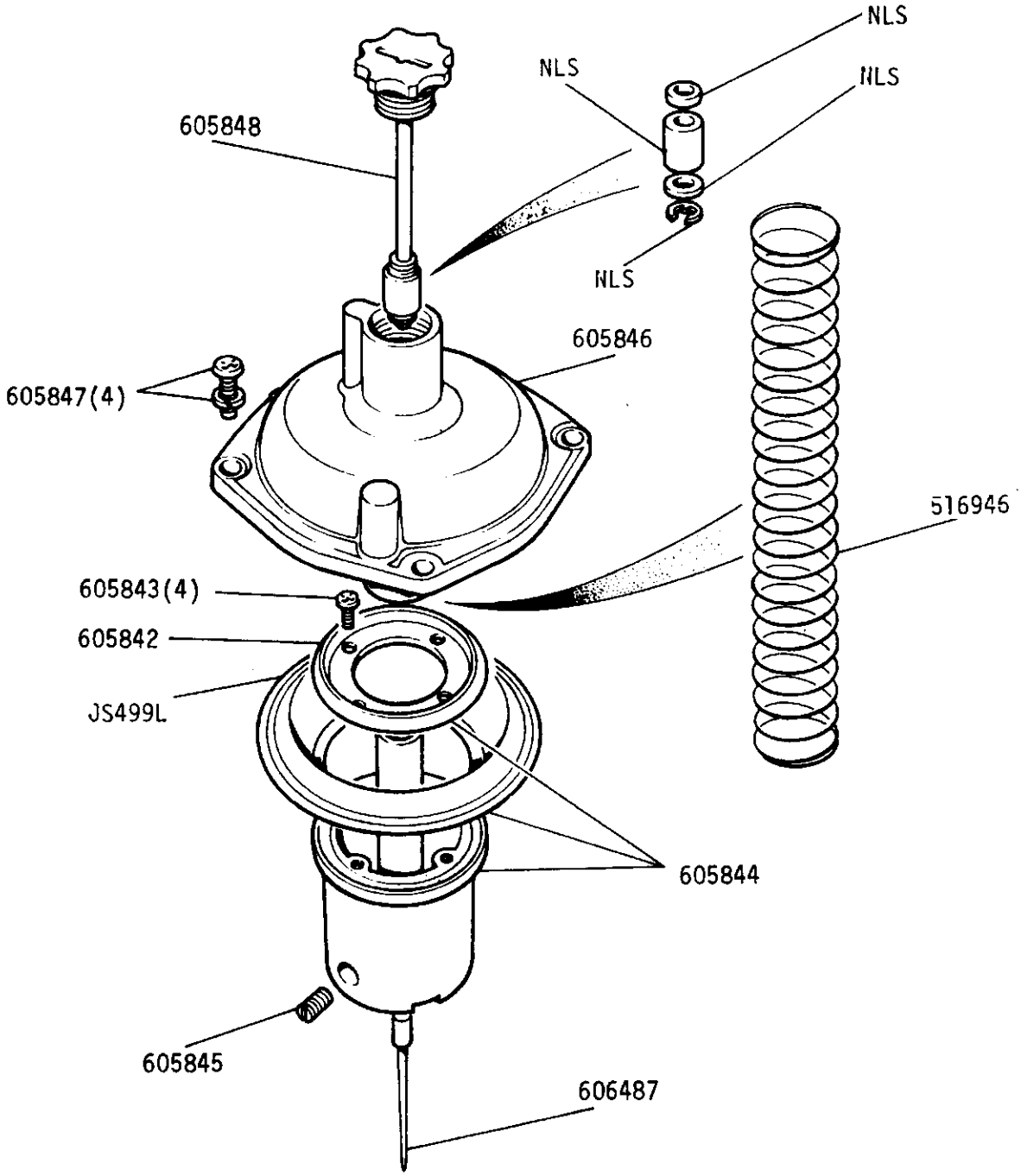

Carburetter complete 598110
Gasket kit for carburetter 605857
Overhaul kit for carburetter 606098
Tamperproof parts kit AAU8781

GROUP H

ENGINE - Carburetter Body and Fixings 2.6 Litre Petrol
Up to Engine Suffix 'B' inclusive

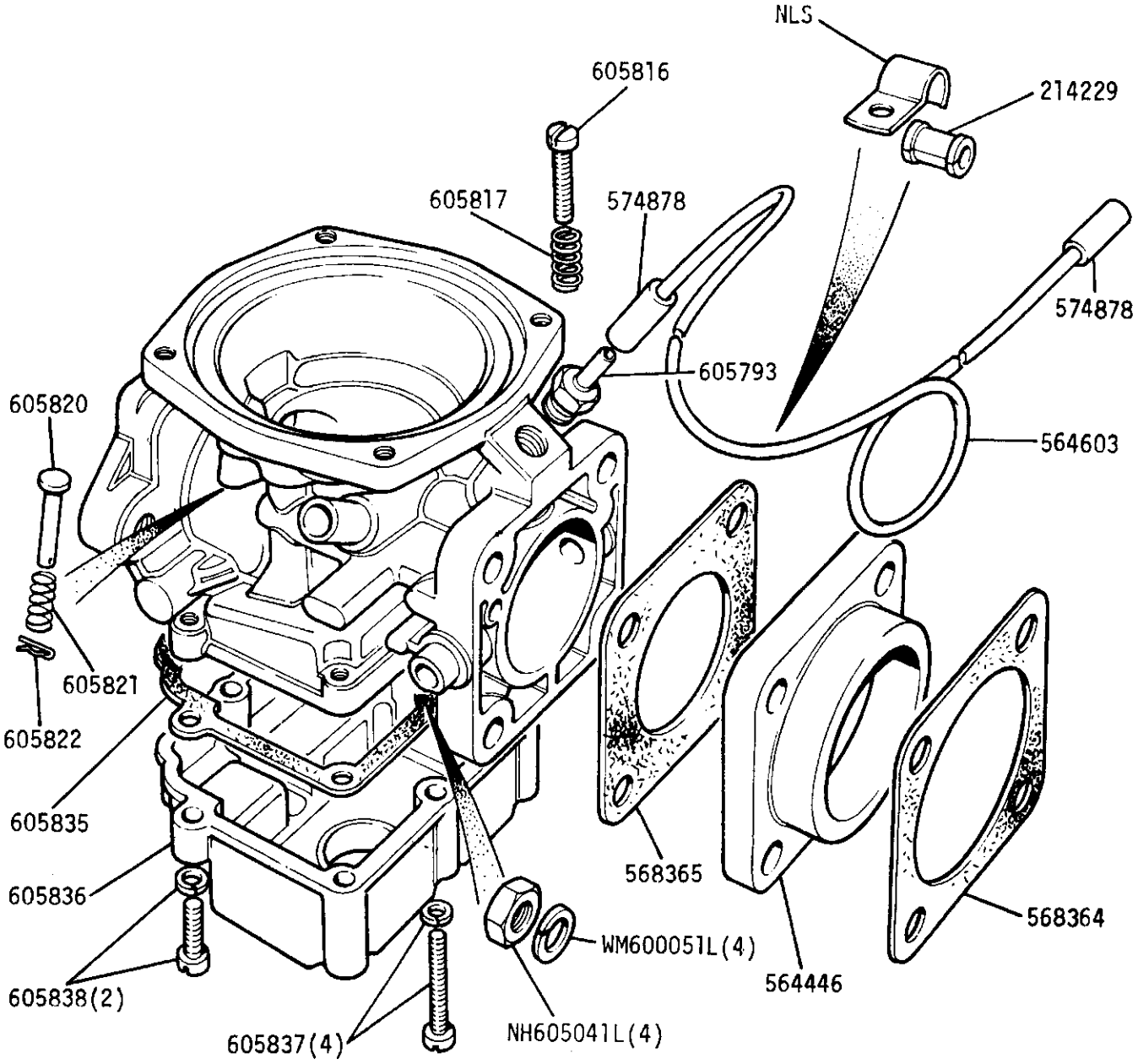

GROUP H
ENGINE - Carburetter Jet Orifice and Float 2.6 Litre Petrol
Up to Engine Suffix 'B' inclusive

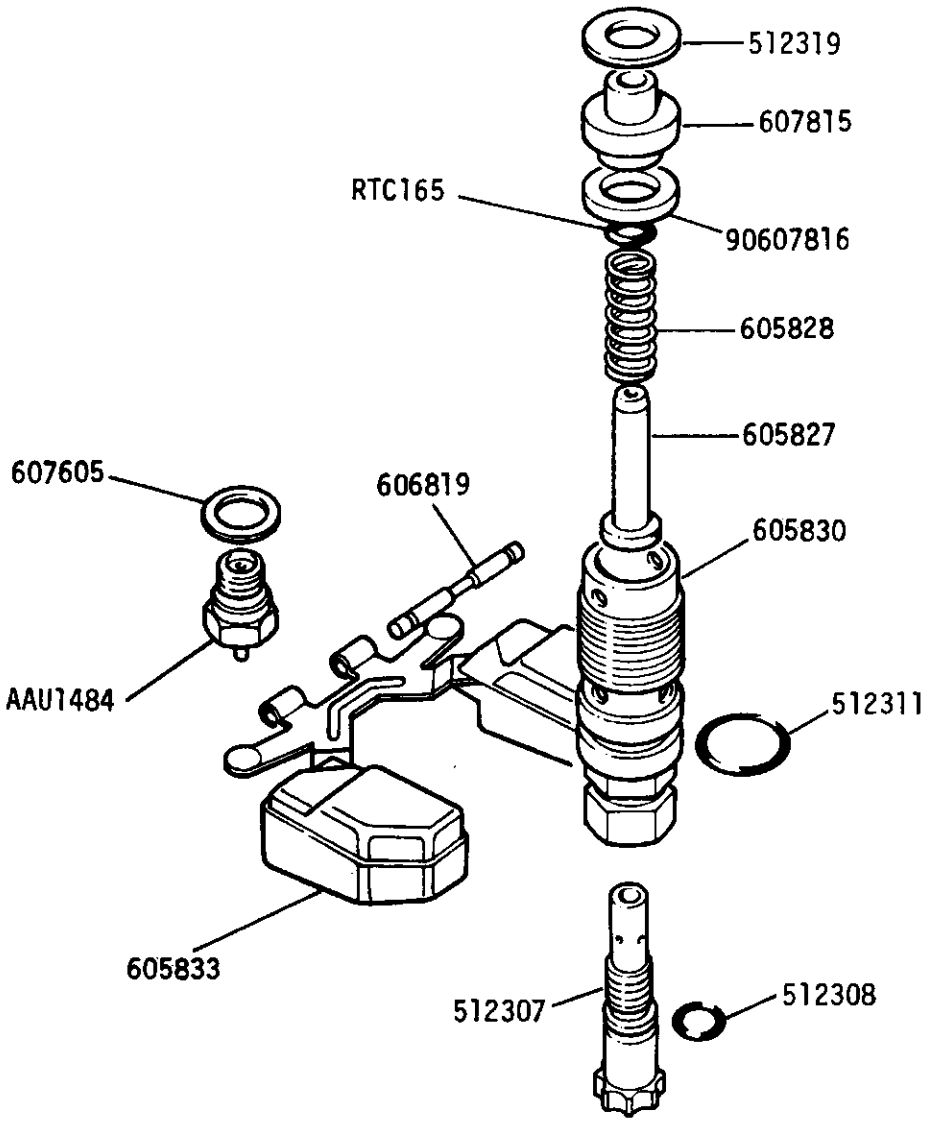

GROUP H

ENGINE - Carburetter Cold Start and Throttle Levers 2.6 Litre Petrol
Up to Engine Suffix 'B' inclusive

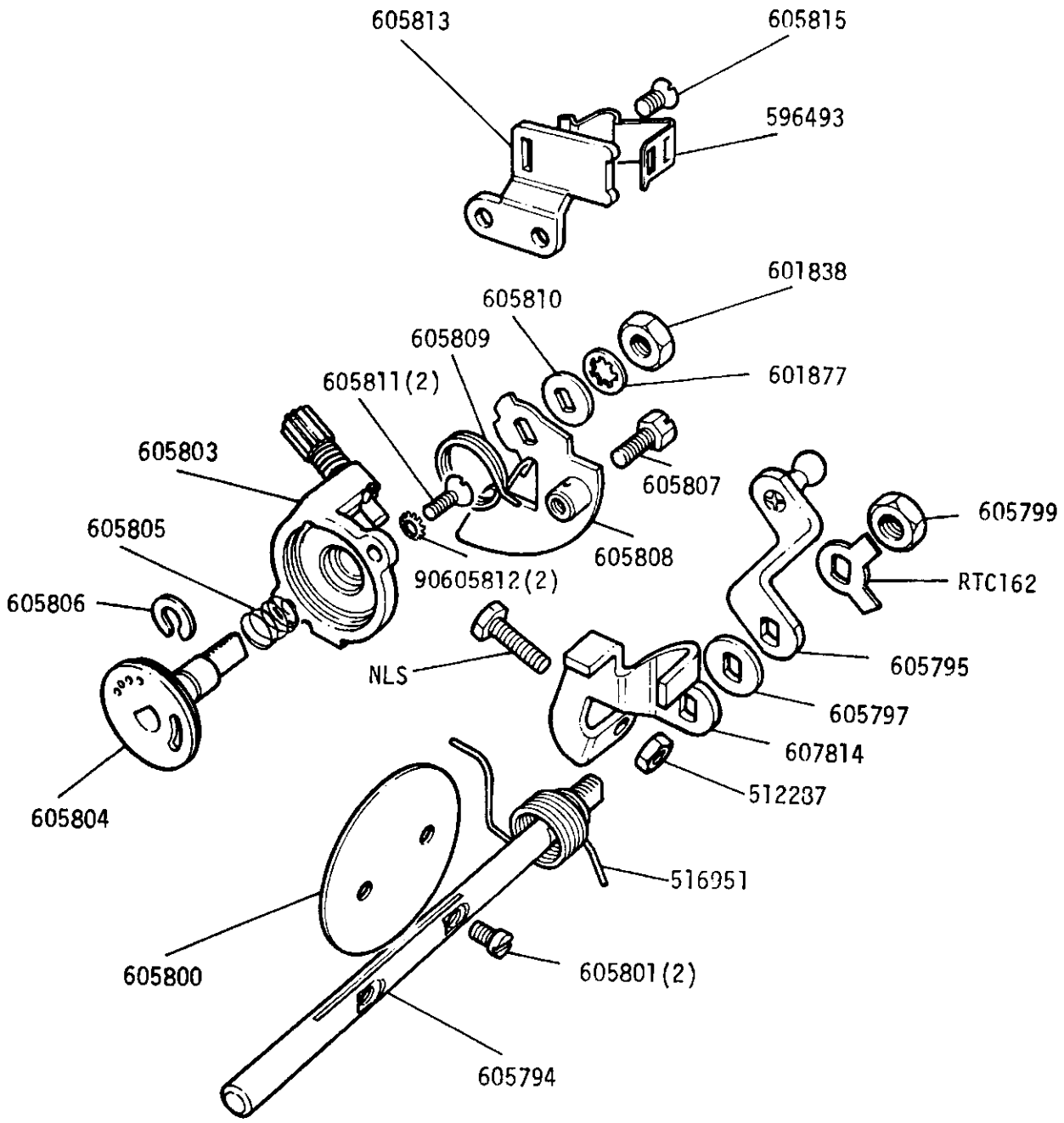

GROUP H

DETOXED ENGINE - Carburetter and Fixings 2.6 Litre Petrol From Engine Suffix 'C' onwards

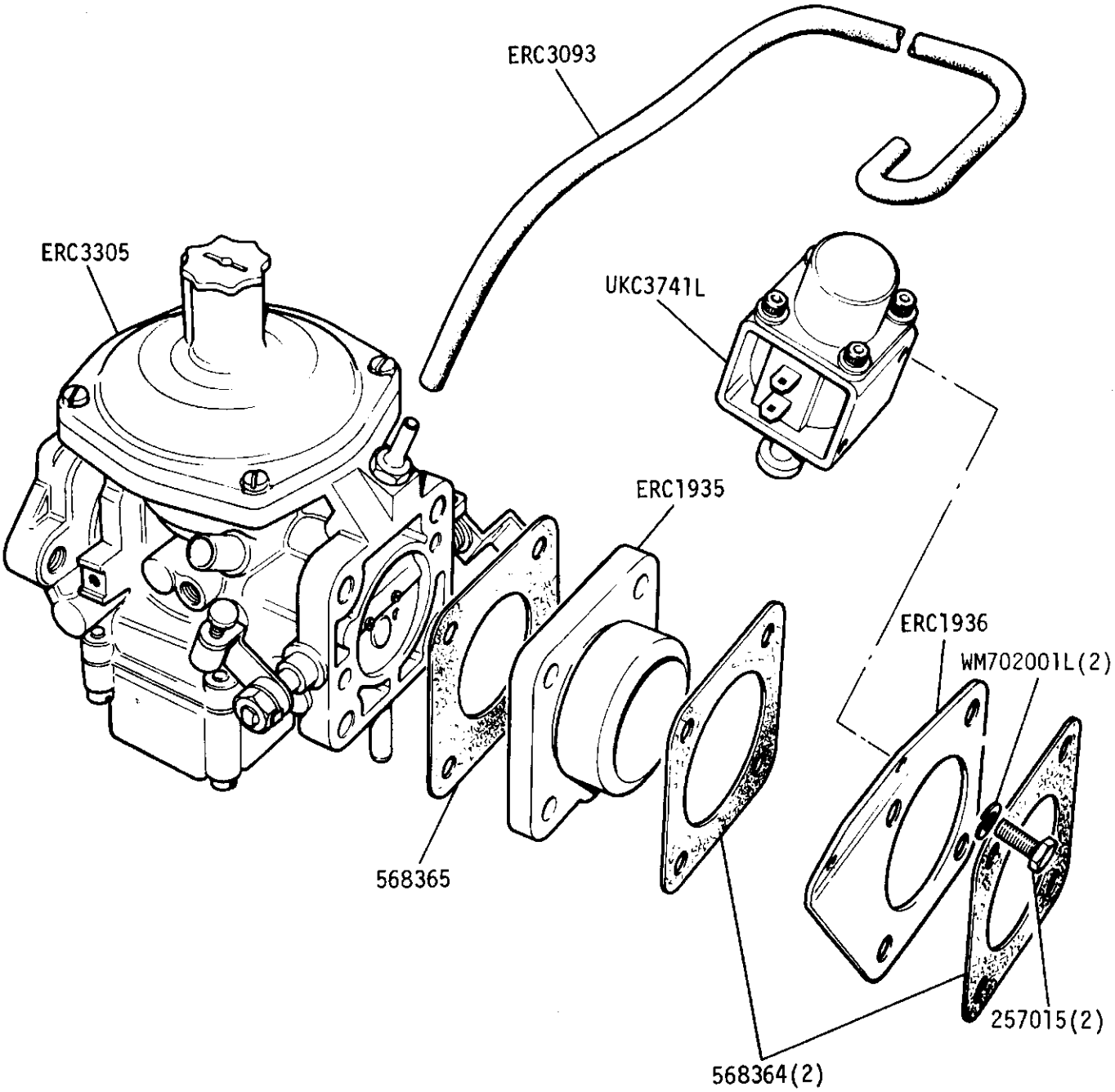

GROUP H

DETOXED ENGINE - Carburetter Components 2.6 Litre Petrol From Engine Suffix 'C' onwards

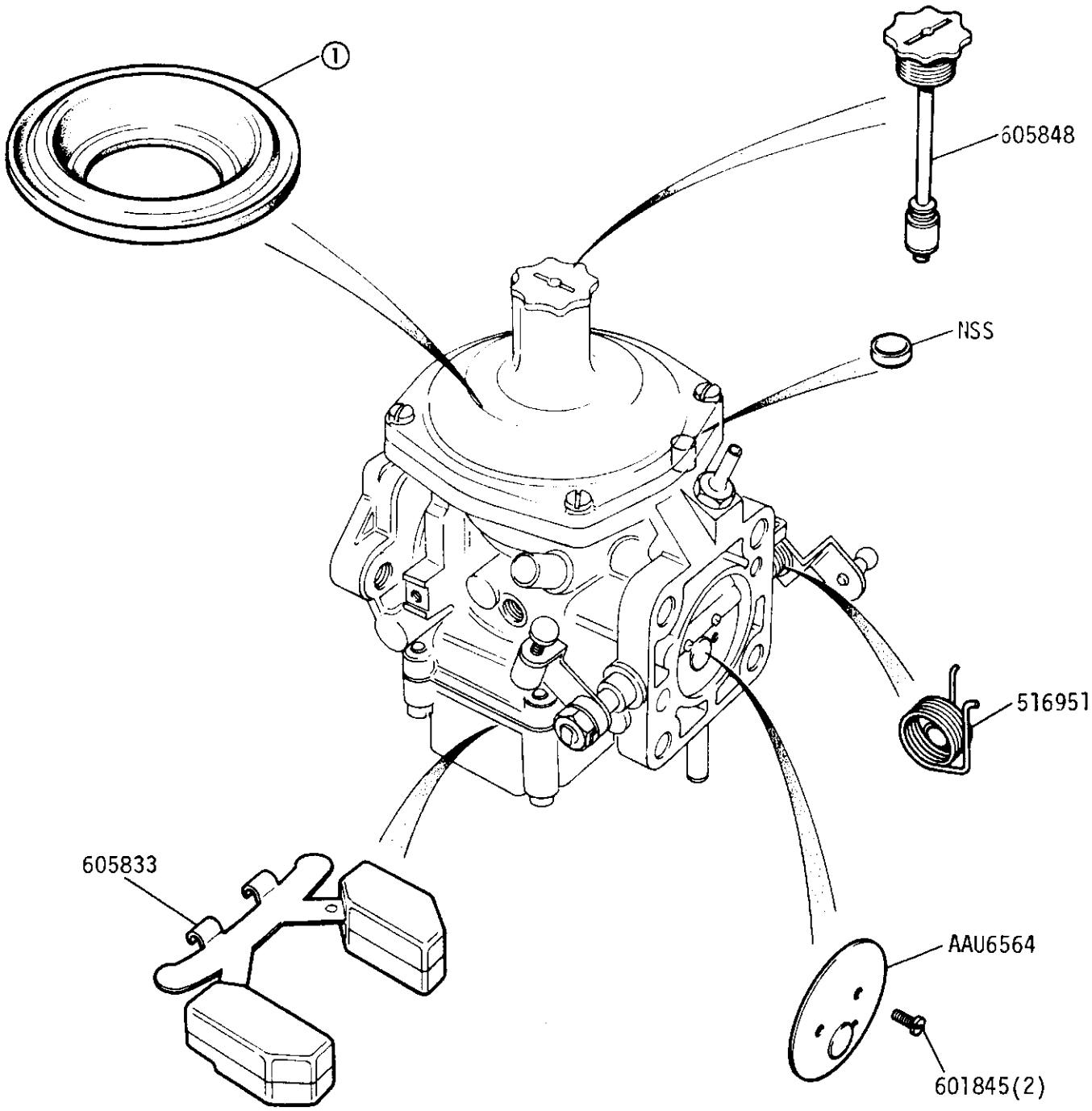

(1) Diaphragm part of Emission Pack BHM1082L

Not illustrated AEU1804. Metering Needle

GROUP H

DETOXED ENGINE - Carburetter Gasket Kits 2.6 Litre Petrol From Engine Suffix 'C' onwards

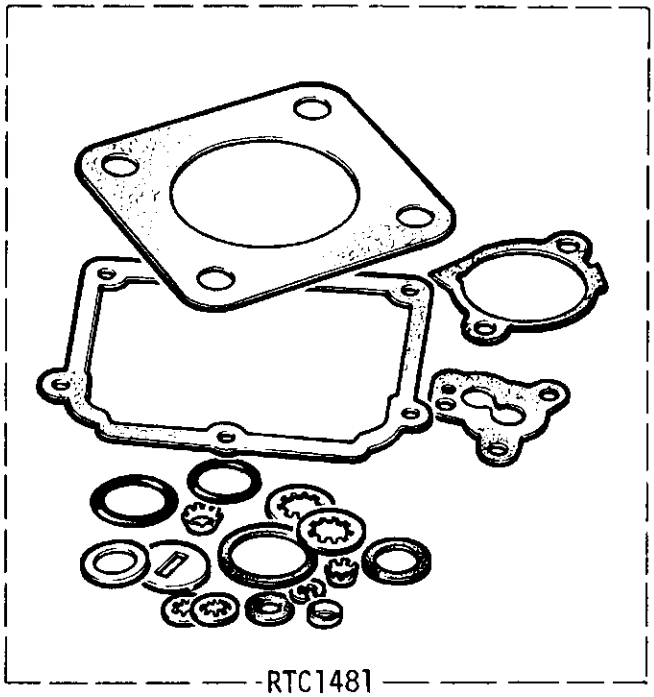

RTC1481

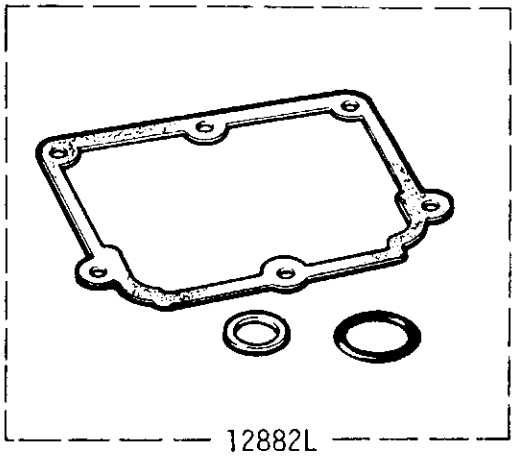

12882L

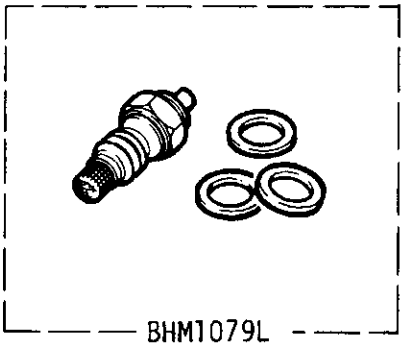

BHM1079L

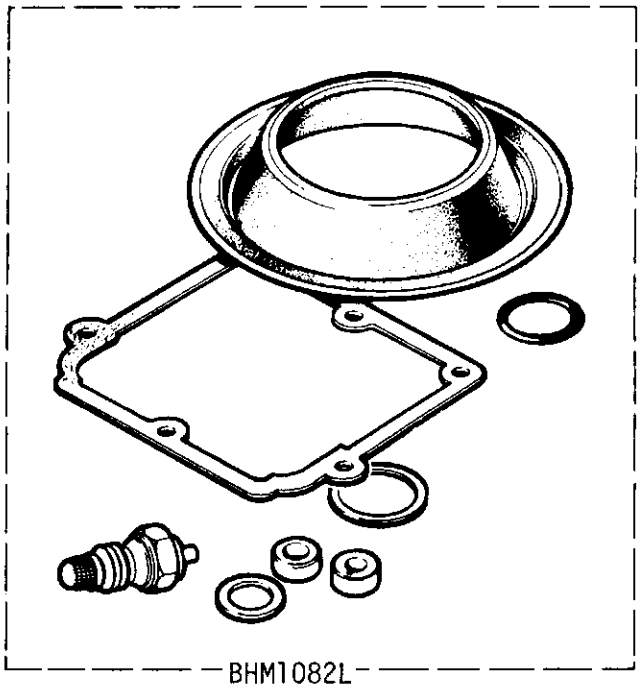

BHM1082L

GROUP H

DETOXED ENGINE - Fuel Trap and Connections 2.6 Litre Petrol From Engine Suffix 'C' onwards

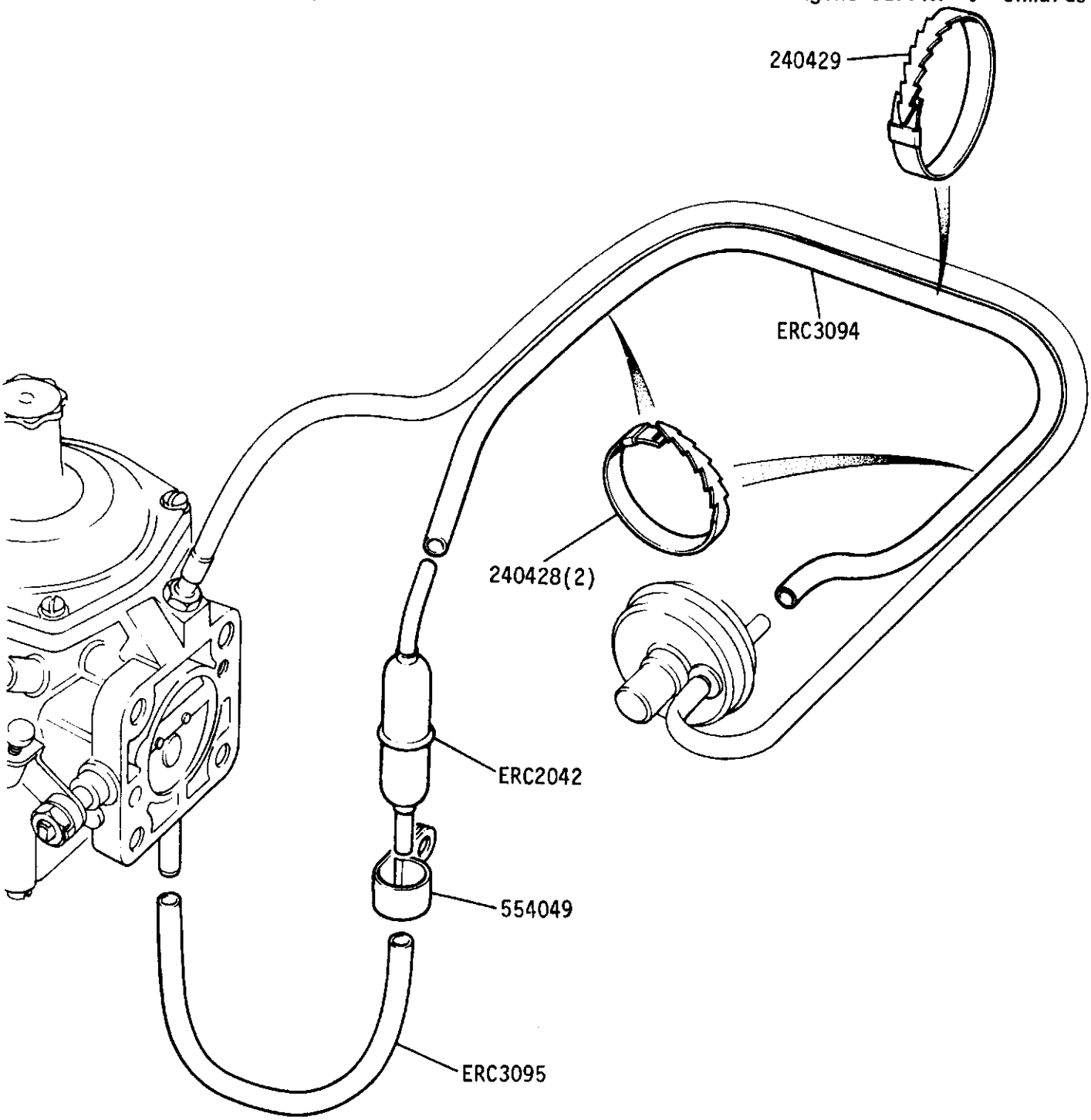

GROUP H
FUEL - Carburetters and fuel pipes 109 V8 except ECE 15-03

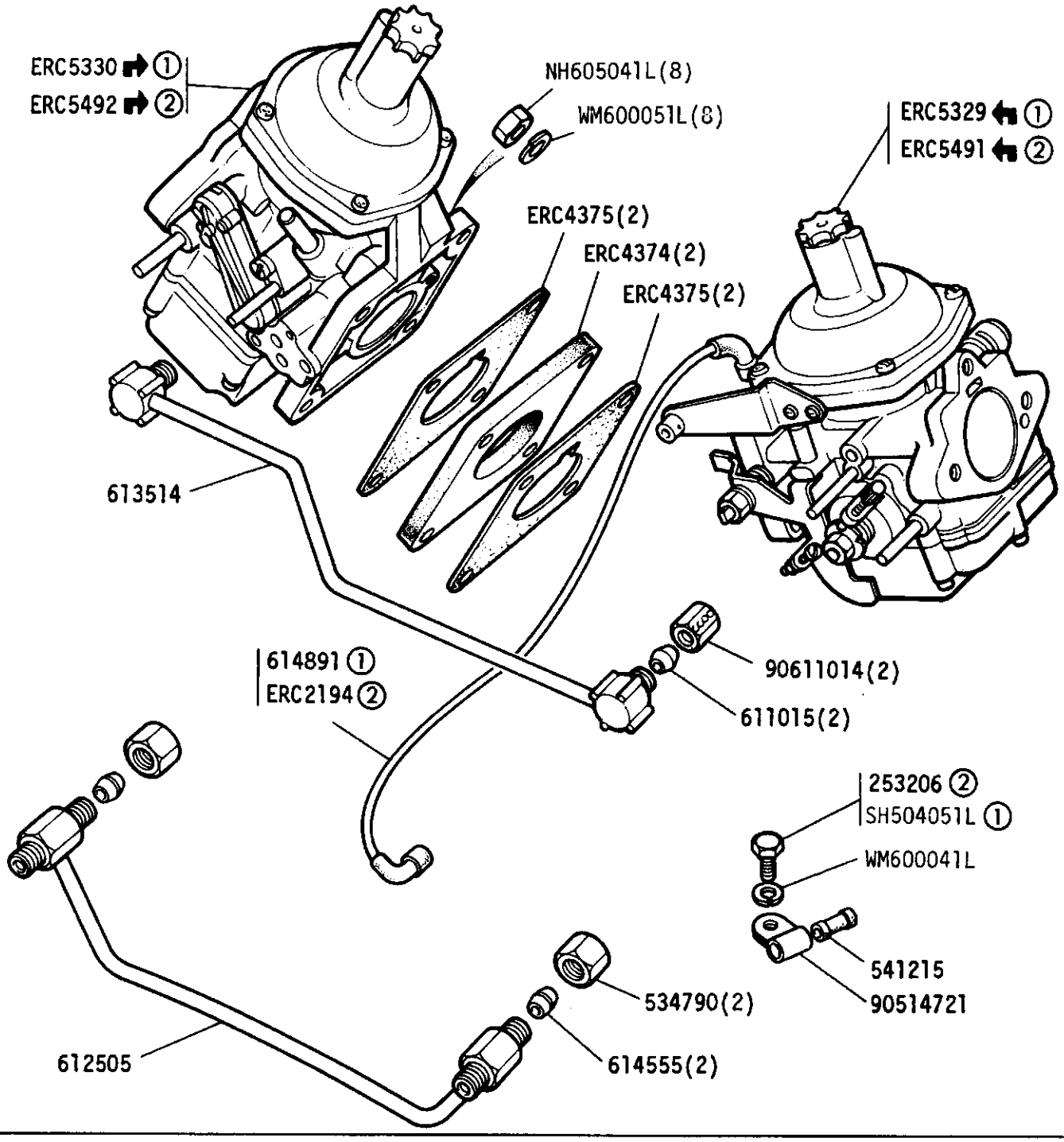

① European detoxed (ECE 15-02)

② Non detoxed

GROUP H
FUEL - Carburetters and fuel pipes 109 V8 ECE 15-03

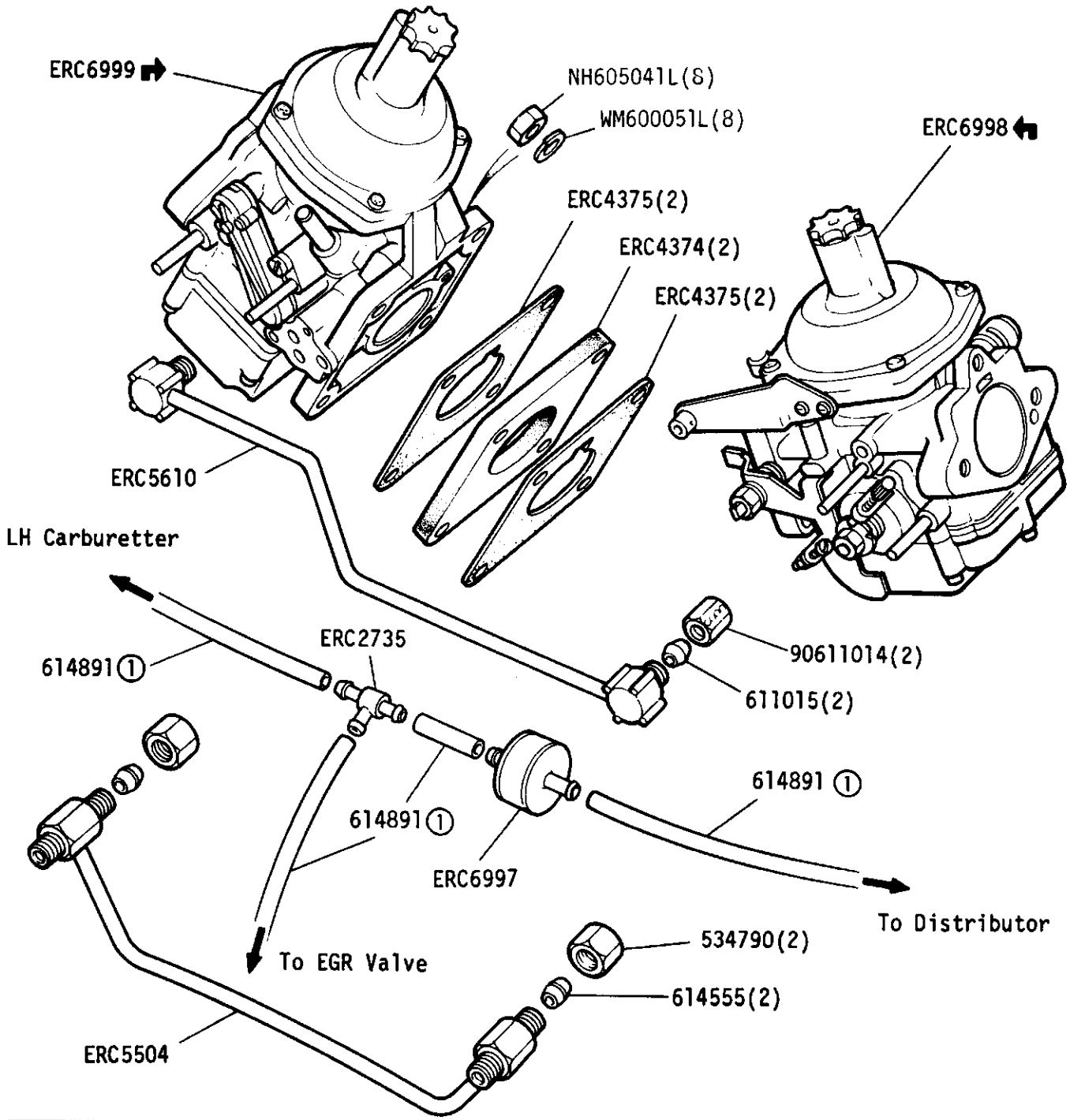

① 614891 supplied as 31" length cut off as required

GROUP H
ENGINE - Carburettor components detoxed 109"V8

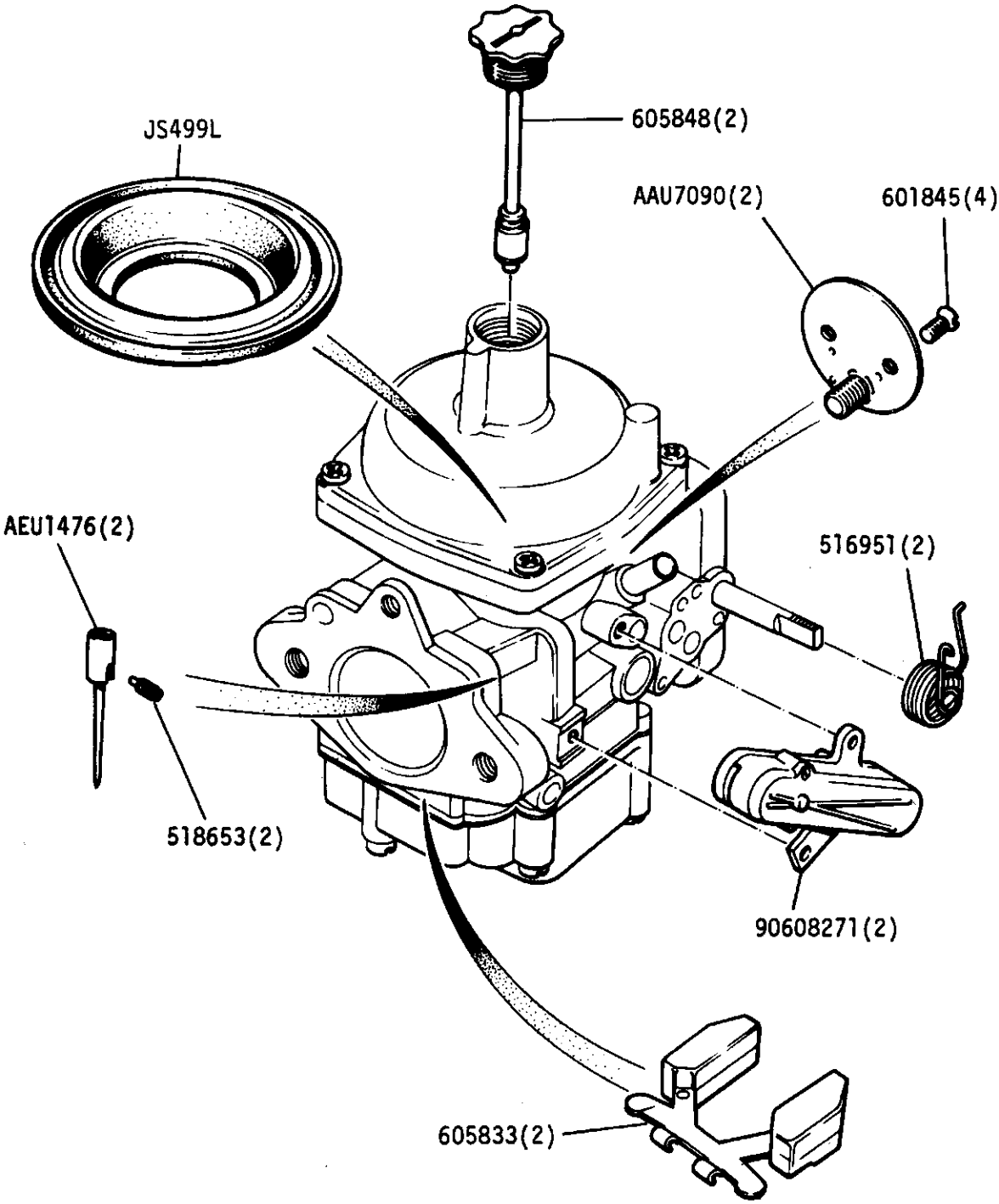

GROUP H
ENGINE - Carburettor components non-detoxed 109"V8

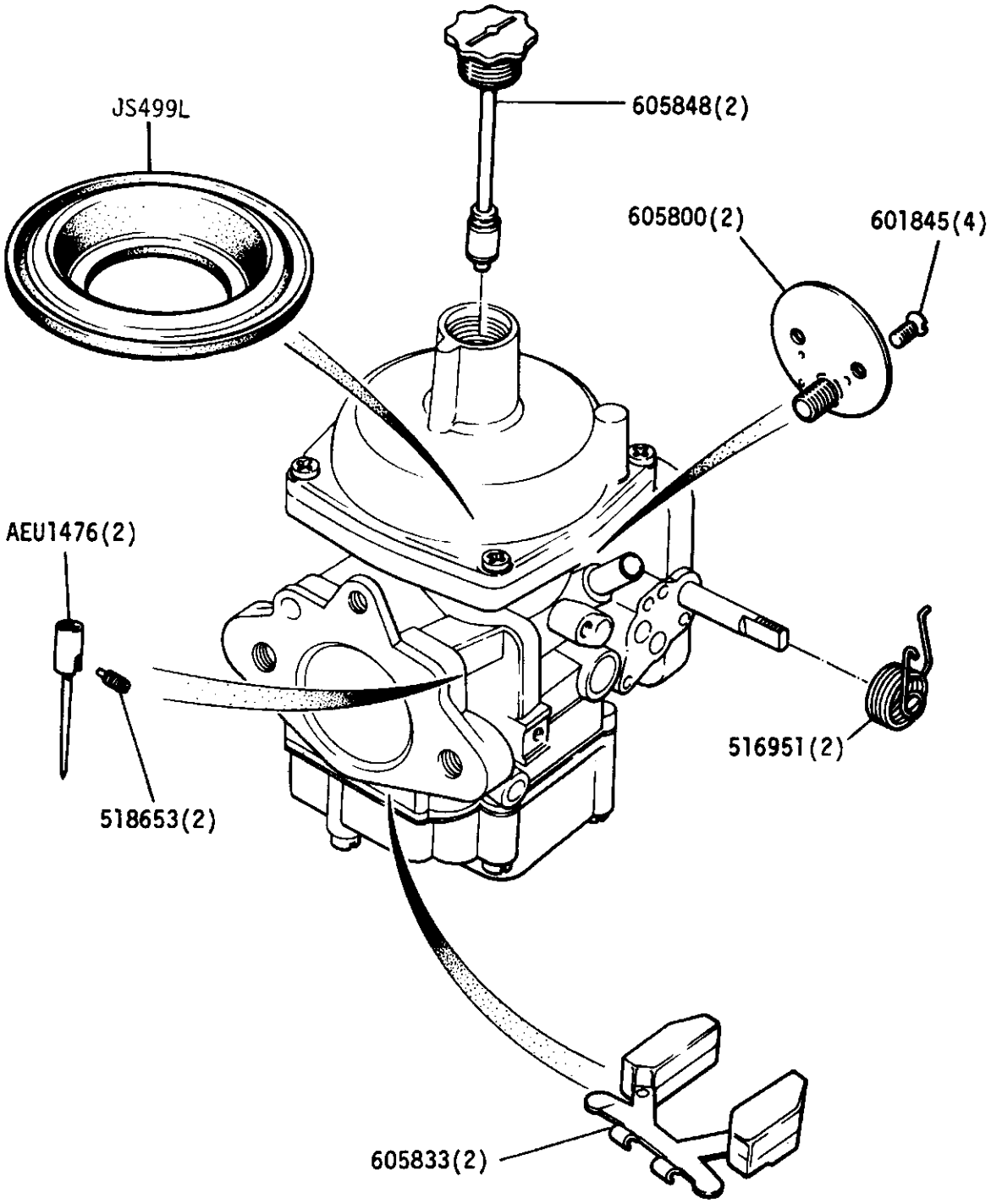

GROUP H

ENGINE - Carburettor gasket kits 109" V8

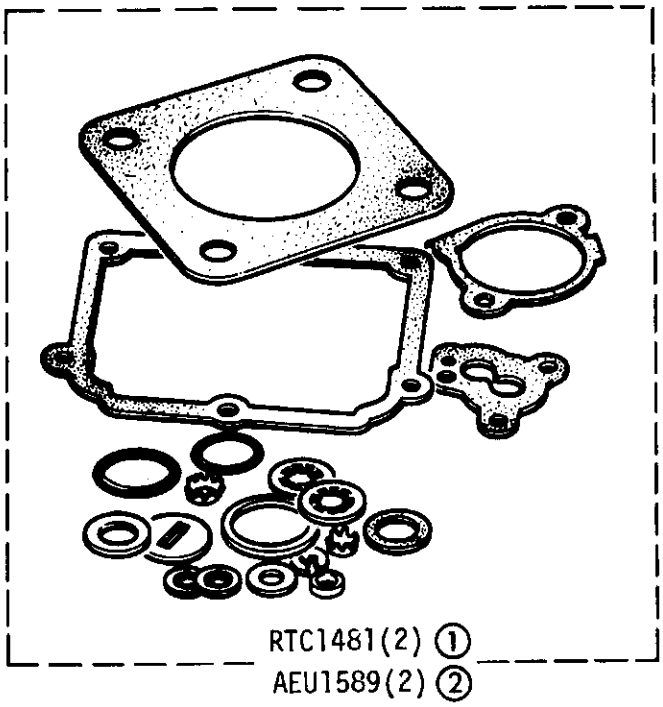

RTC1481(2) ①
AEU1589(2) ②

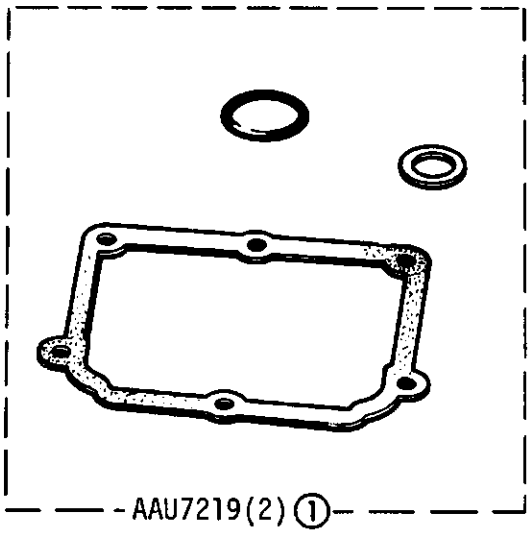

AAU7219(2) ①

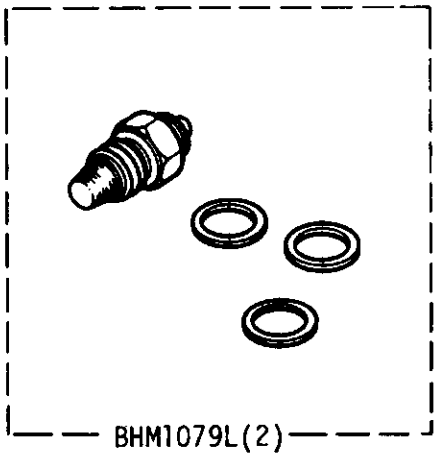

BHM1079L(2)

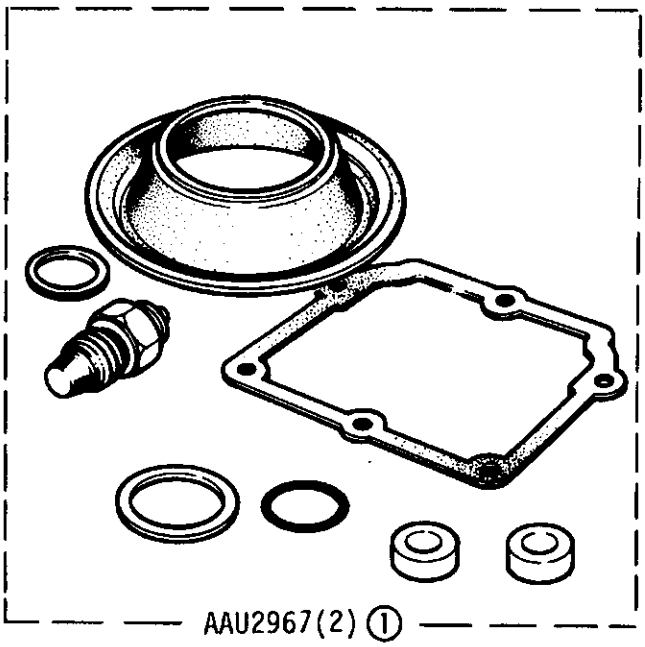

AAU2967(2) ①

① Detoxed
② Non detoxed

GROUP H

ENGINE-AIR INTAKE ADAPTORS 109 V8

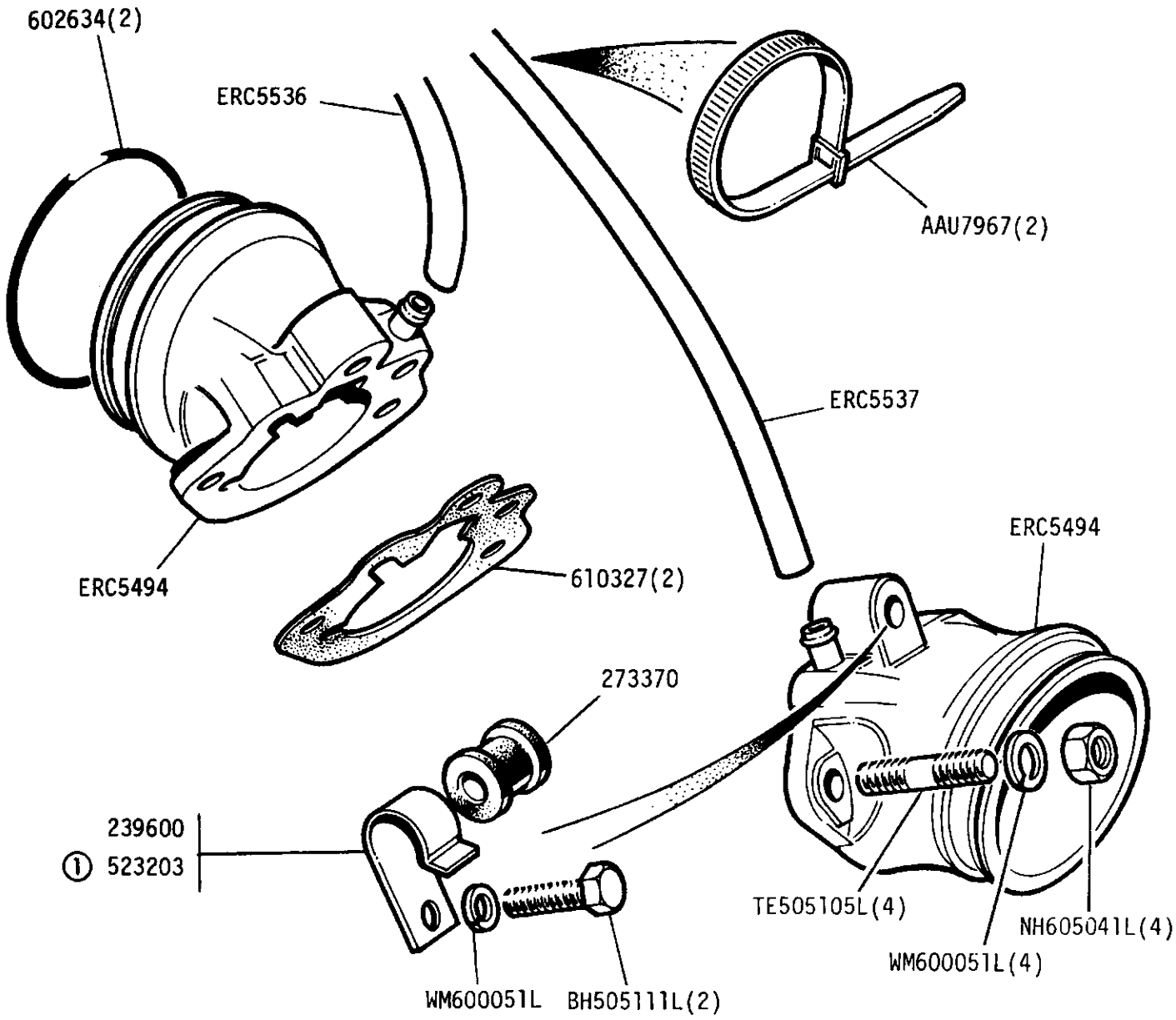

① Detoxed

VS4226.

GROUP H
ENGINE - Throttle Linkage 109 V8

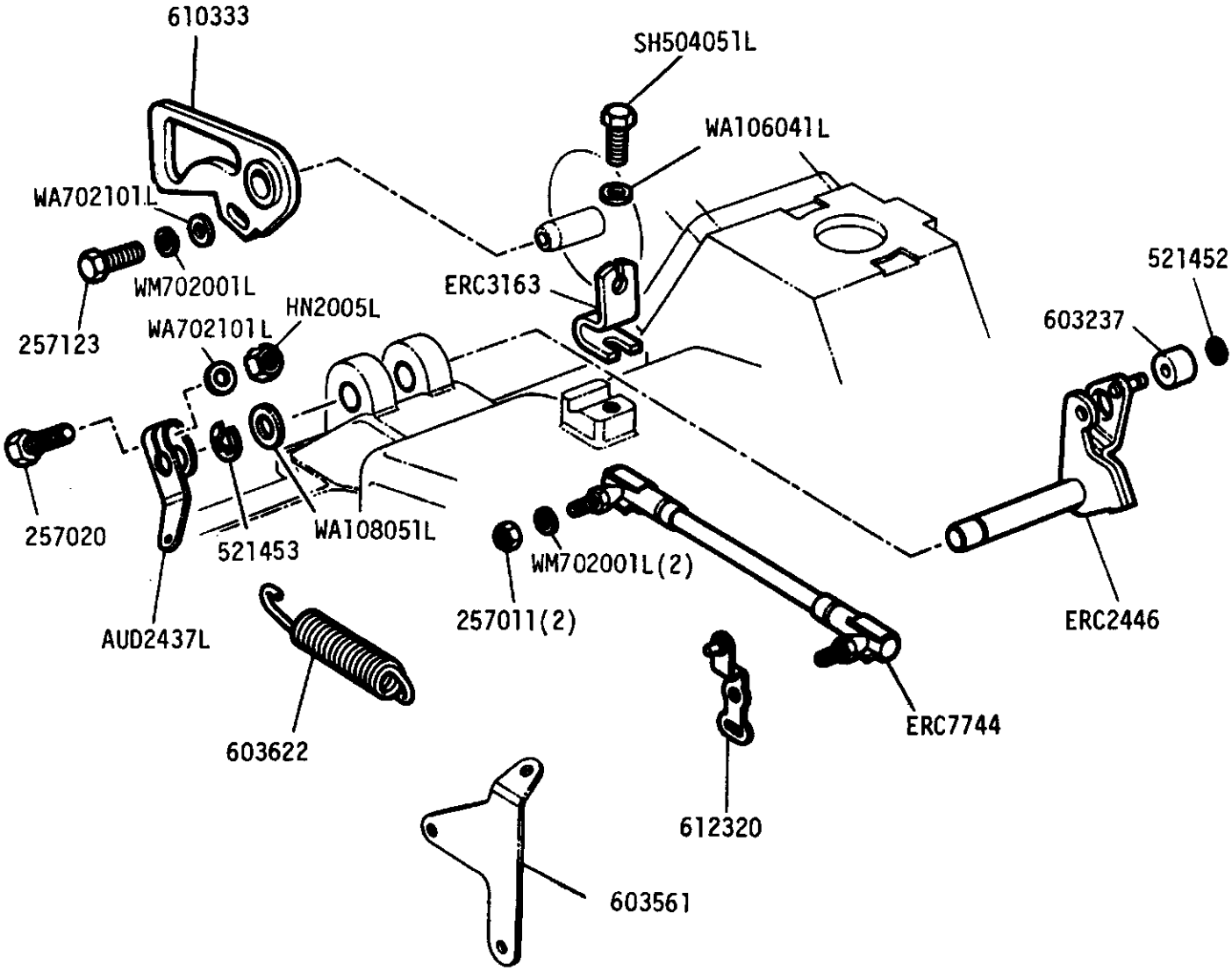

GROUP H
DETOXED ENGINE - Air Rails and Check Valve - 109V8 built to ECE15 03

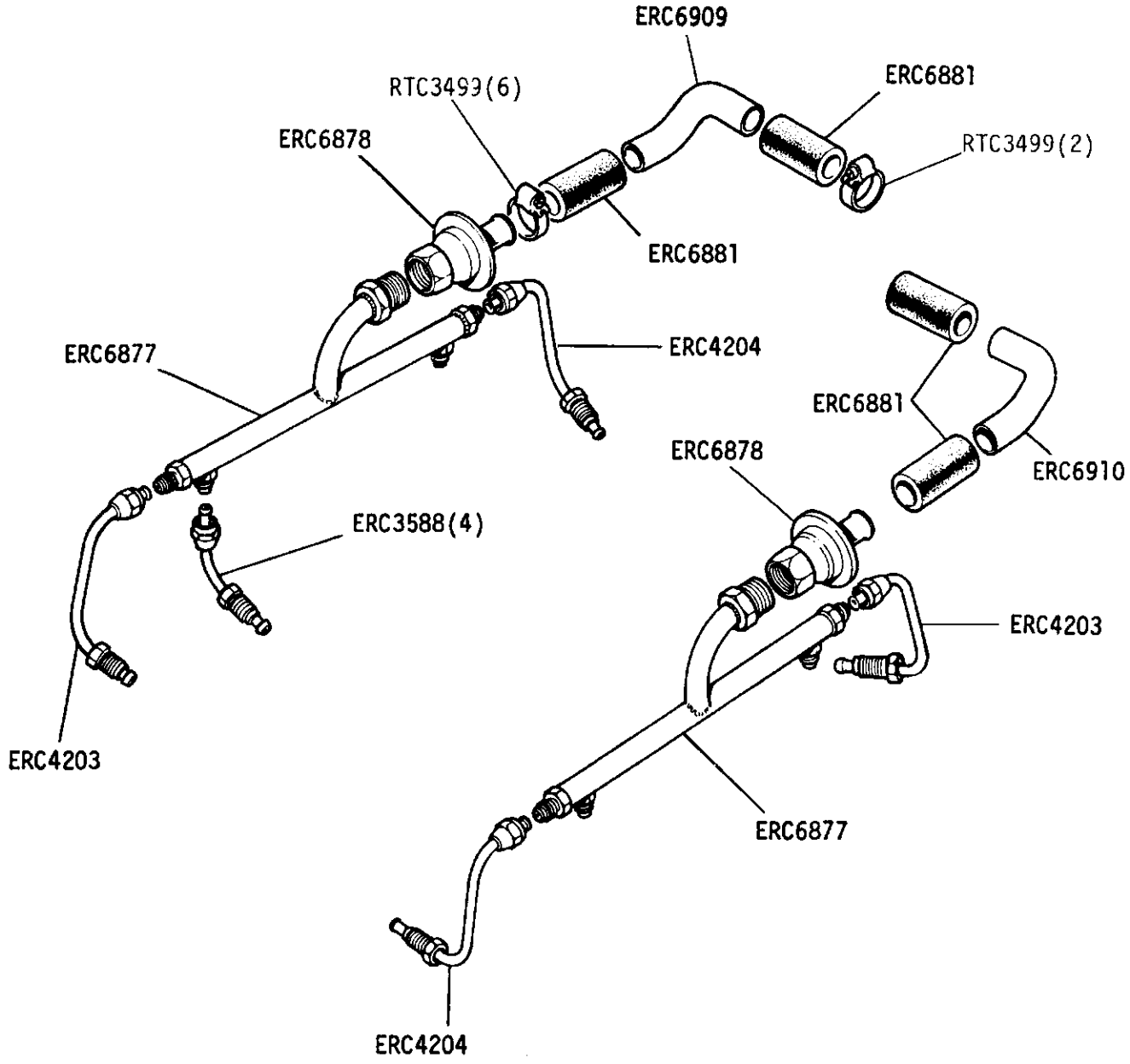

GROUP H
Breather Filter and Flame Traps 109V8

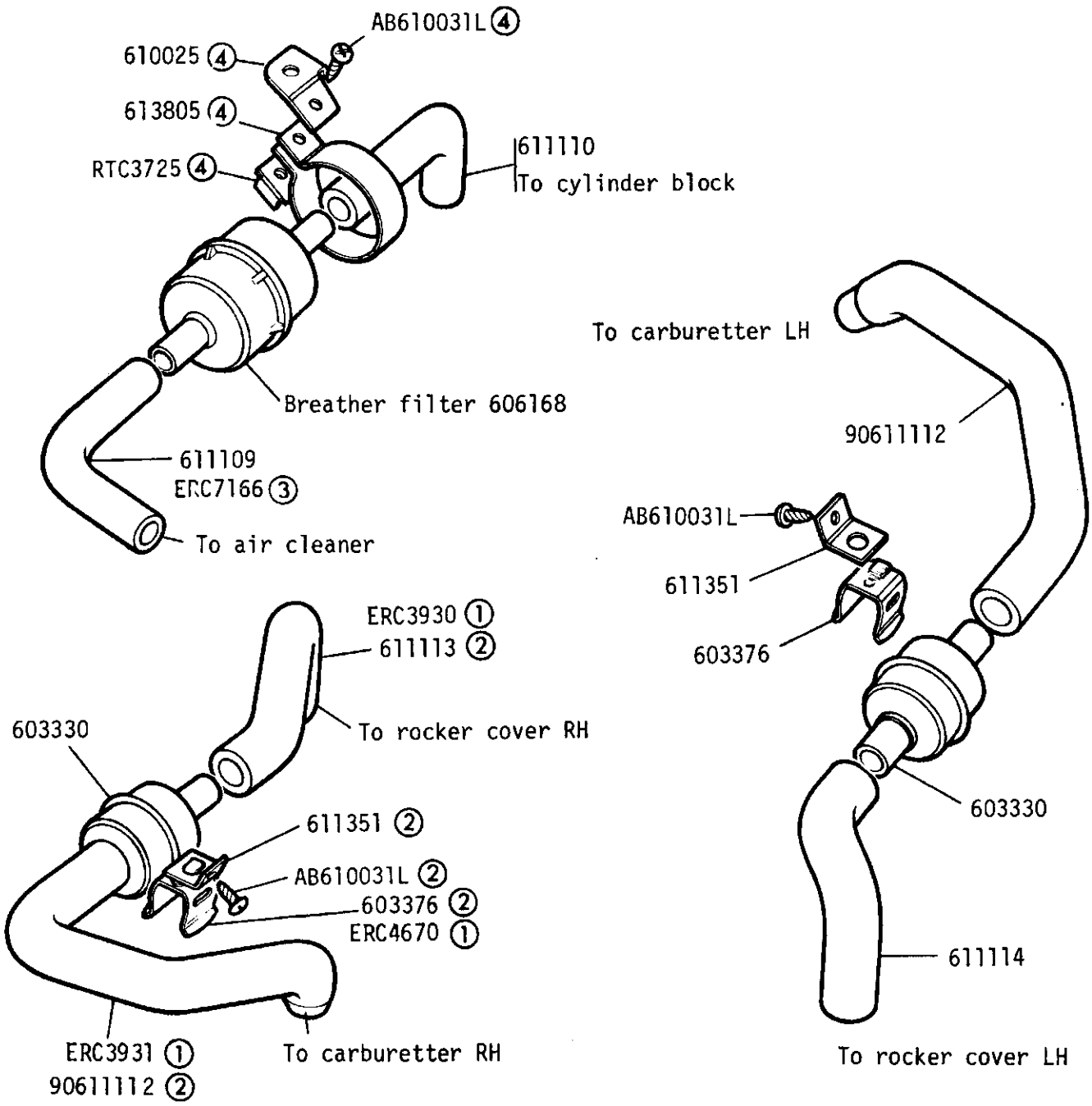

① Not detoxed
② Detoxed
③ Vehicles built to European detoxed ECE15-03
④ Except vehicles built to ECE15-03

GROUP H
ENGINE - Air Cleaner 2¼ Litre Petrol

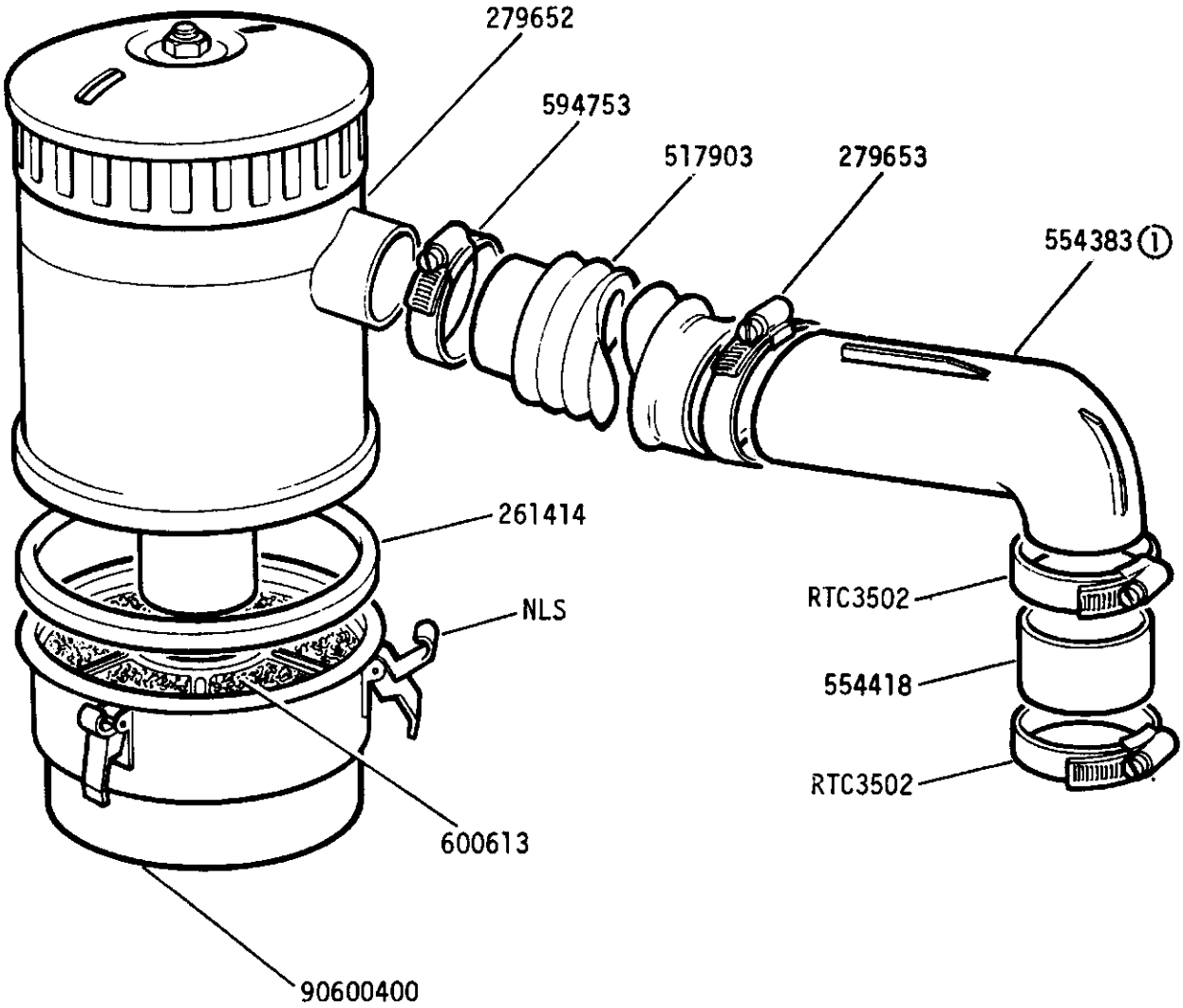

① Up to Engine suffix 'B' inclusive
From Engine suffix 'C' see frame 1C 09

GROUP. H

ENGINE - Air Cleaner - 2.6 Litre Petrol

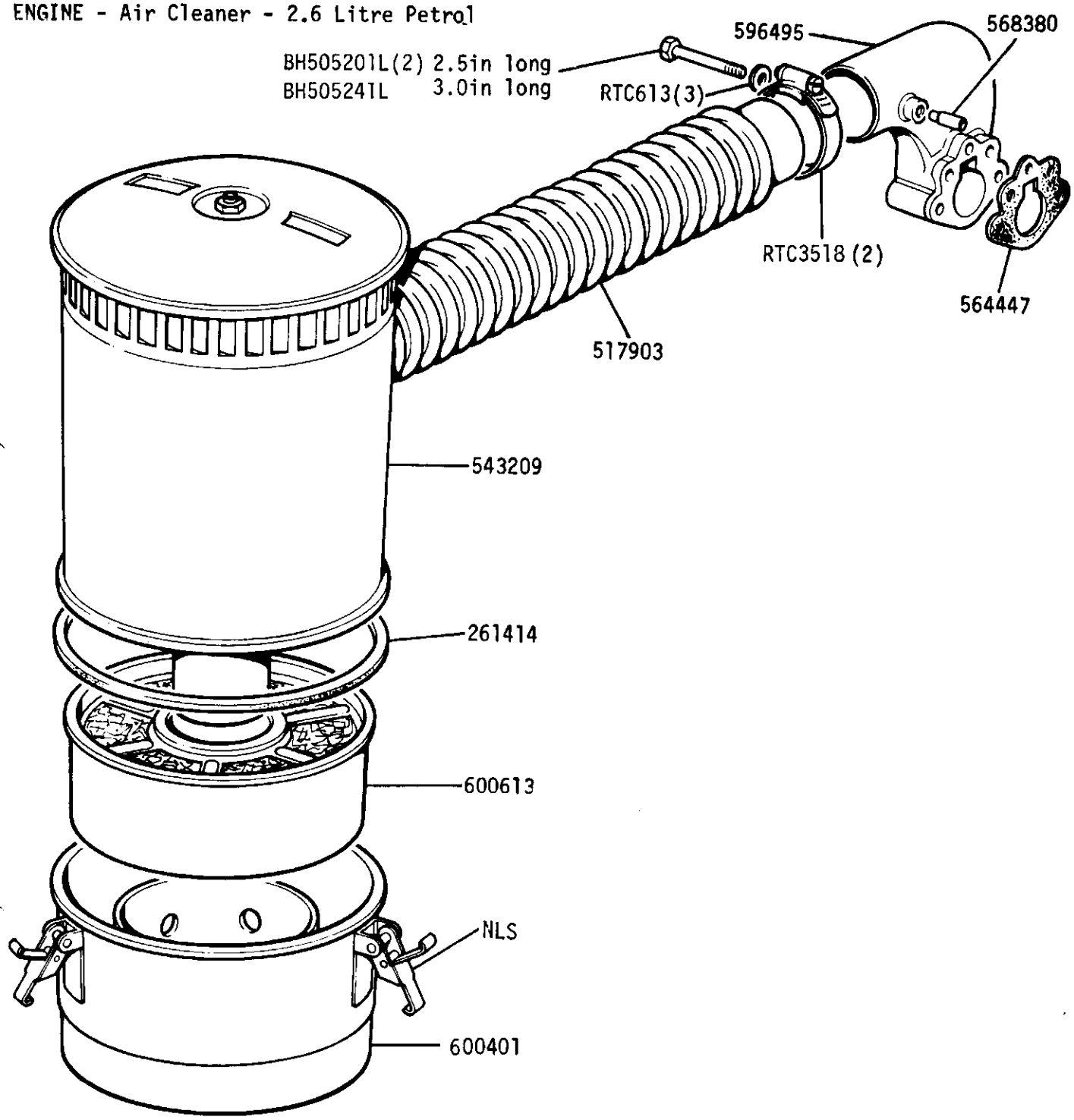

GROUP H
ENGINE - Air Cleaner 2¼ Litre Diesel

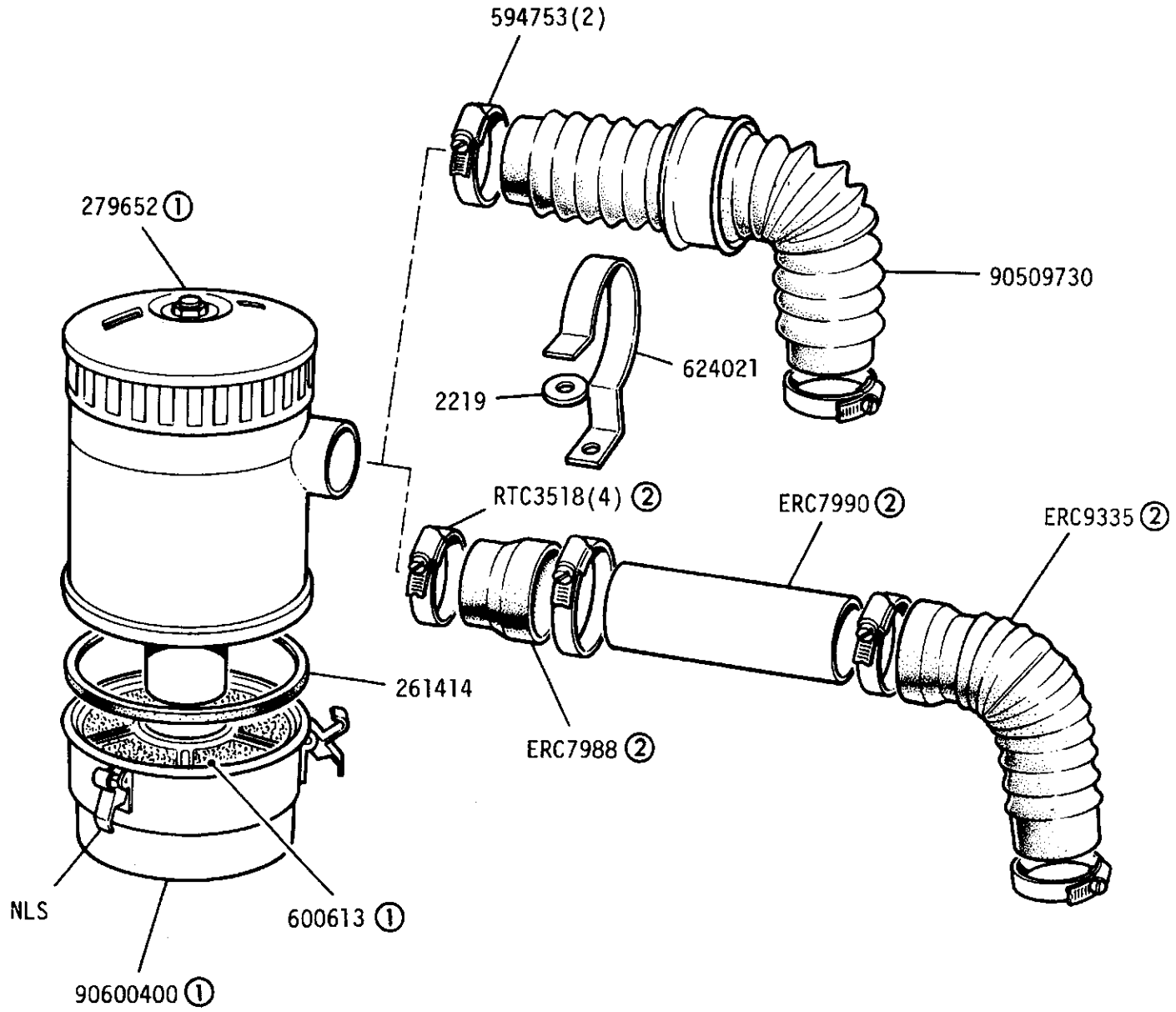

① Except Switzerland

② Vehicles for U.K, Sweden, France, Denmark, Germany, Norway, Netherlands from SALLBABG2AA176881 Fitted with 77/212/EEC Noise Regulations

GROUP H
ENGINE - Air Cleaner - 2¼ Litre Diesel

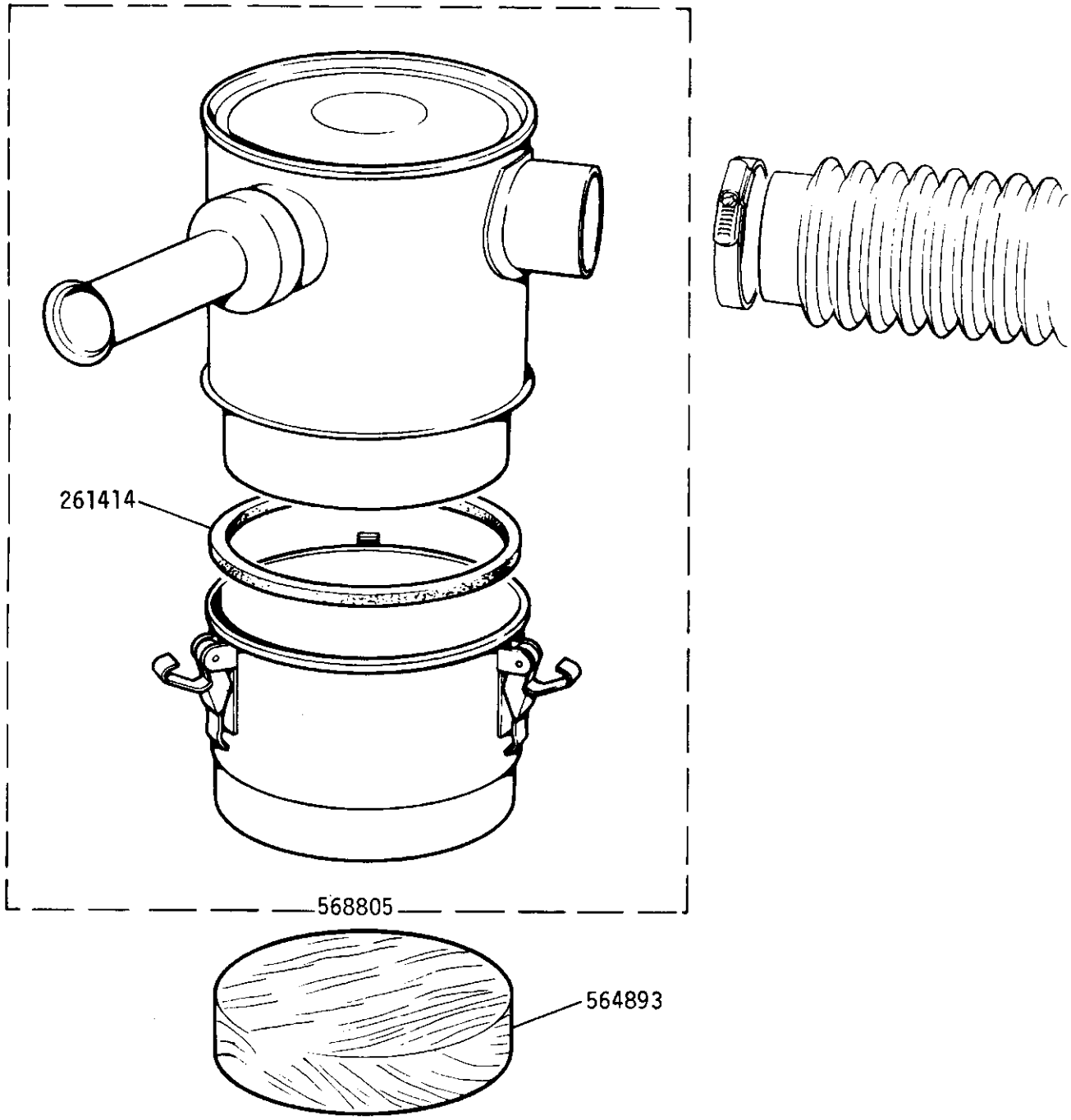

Switzerland only

GROUP H
FUEL SYSTEM - Air cleaner , 109V8, non-detoxed engine

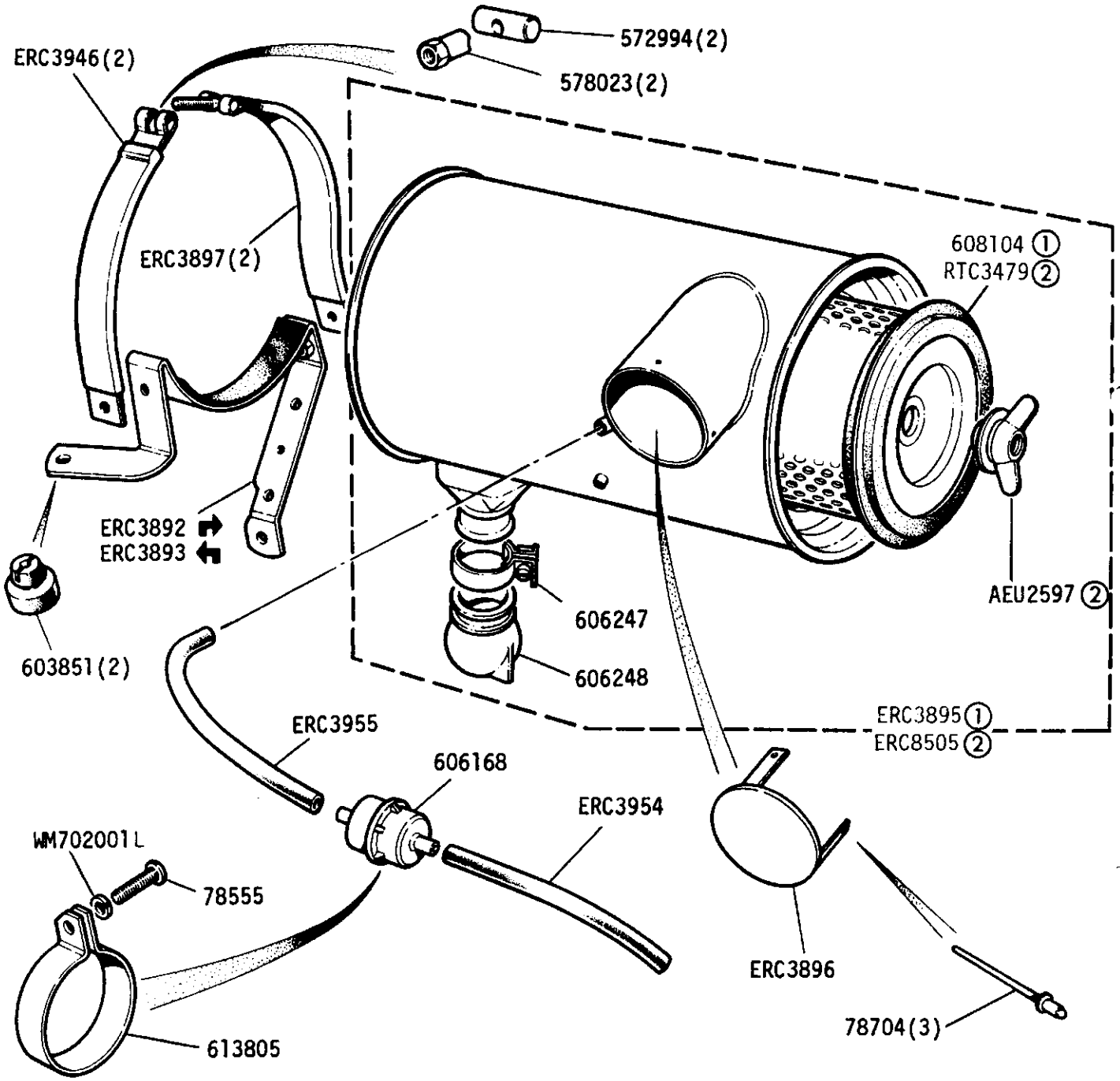

① Up to vehicle No. 186339
② From vehicle No. 186340 onwards.

GROUP H
FUEL SYSTEM - Air cleaner, 109V8, non detoxed engine

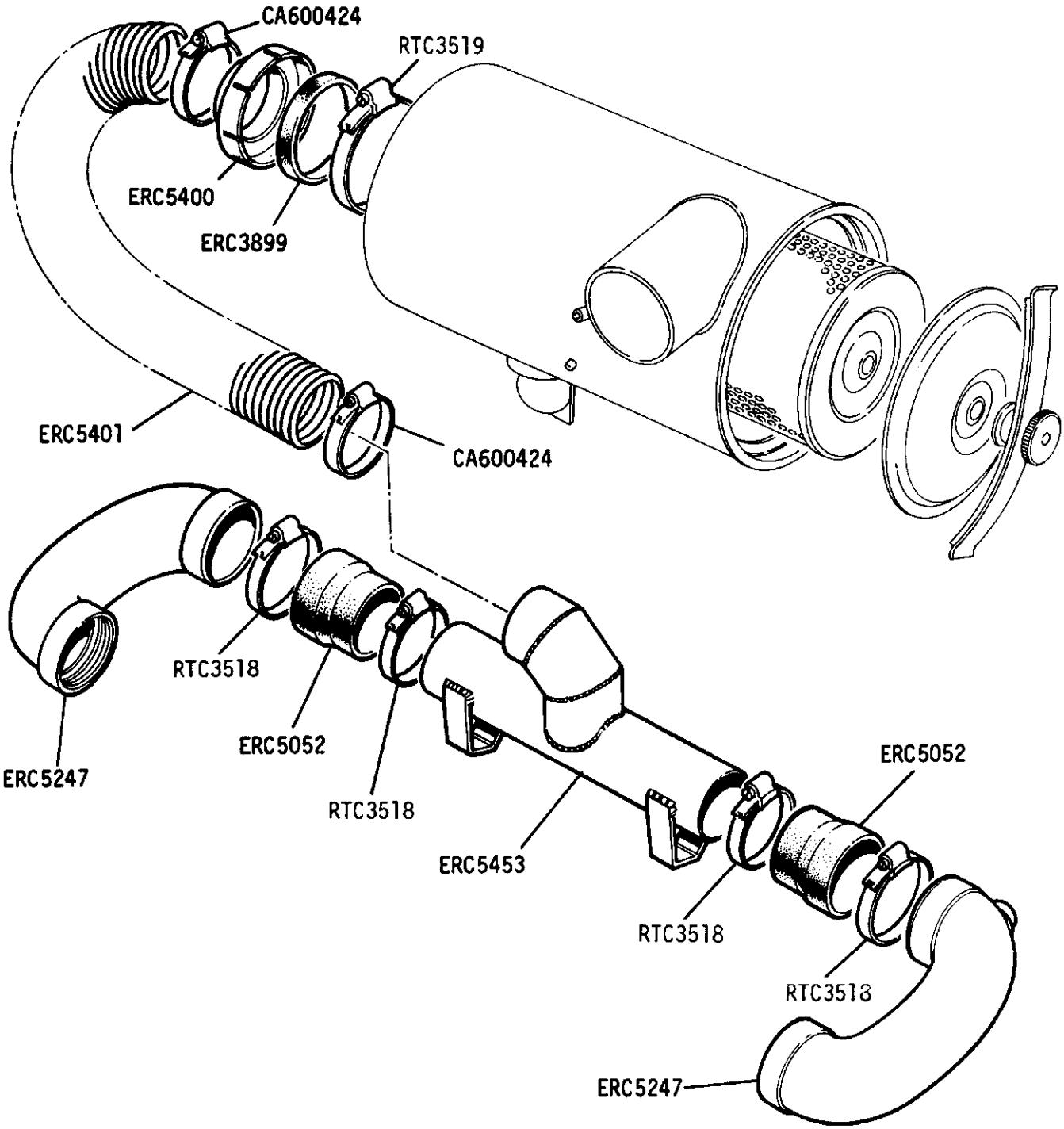

GROUP H
FUEL SYSTEM - Air cleaner, 109V8, detoxed engine - Except Germany, Norway, Switzerland

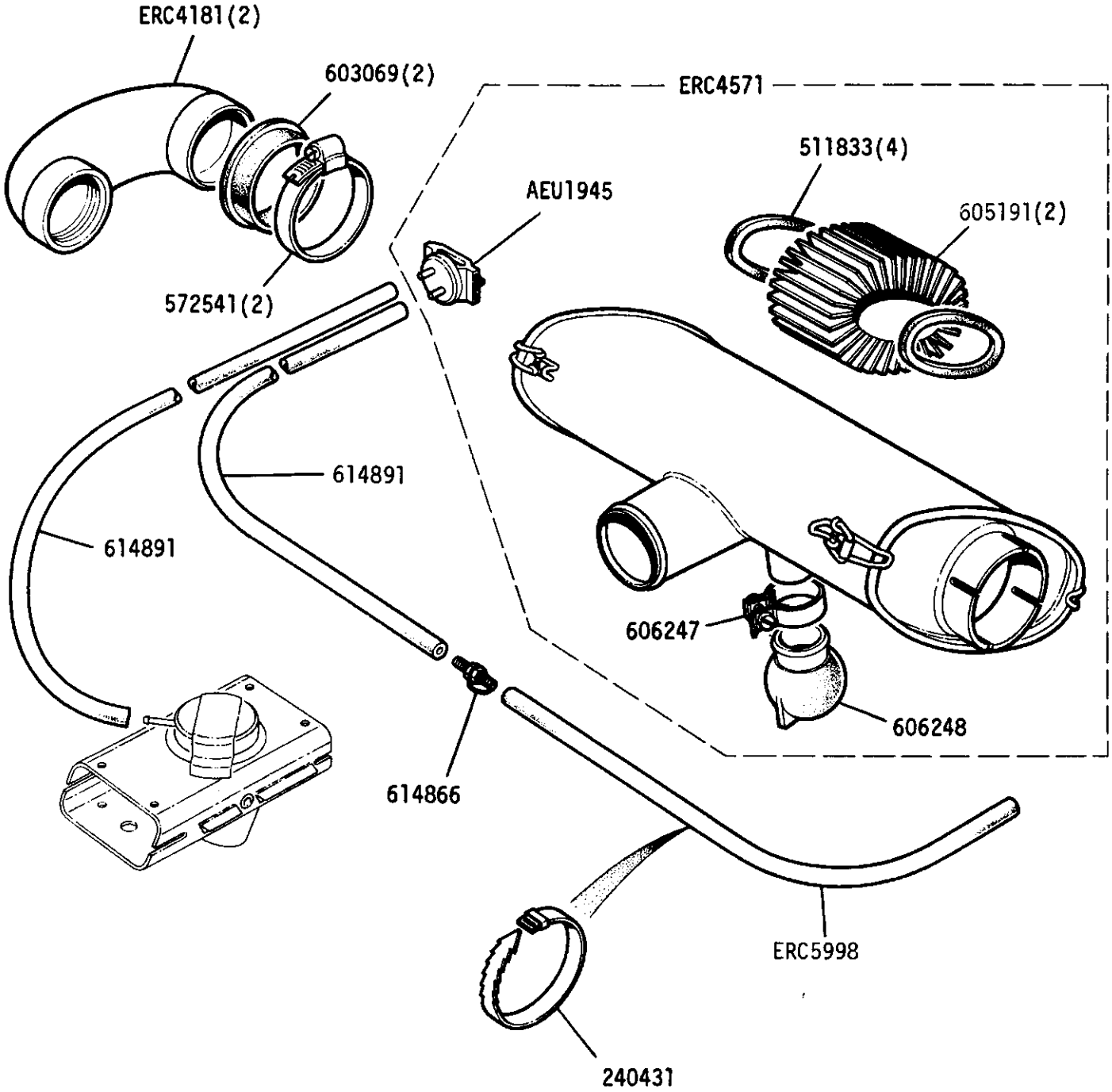

GROUP H
FUEL SYSTEM - Air cleaner, 109V8, detoxed engine-Germany, Norway, Switzerland

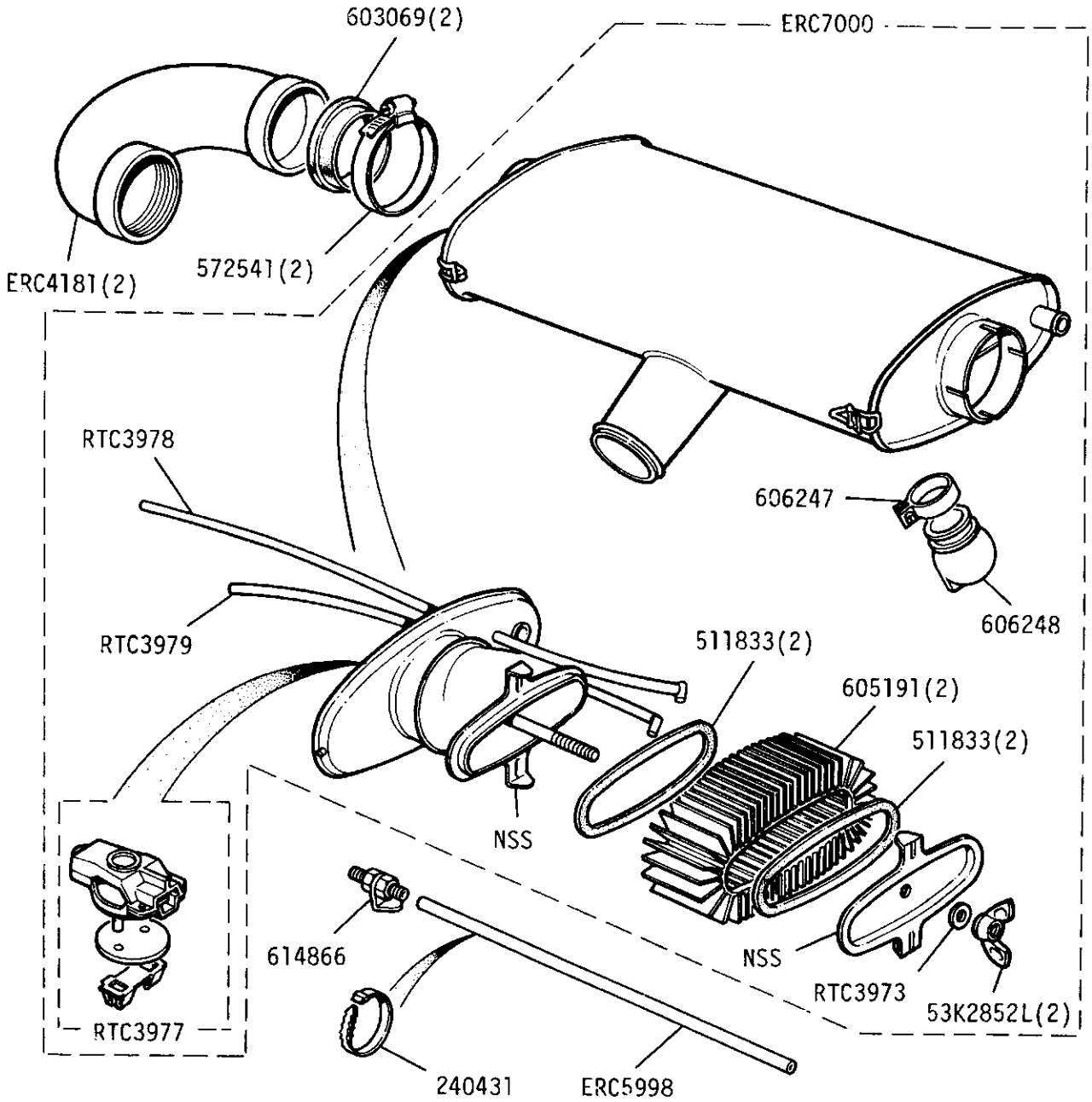

GROUP H
FUEL SYSTEM - Air cleaner, 109V8, detoxed engine

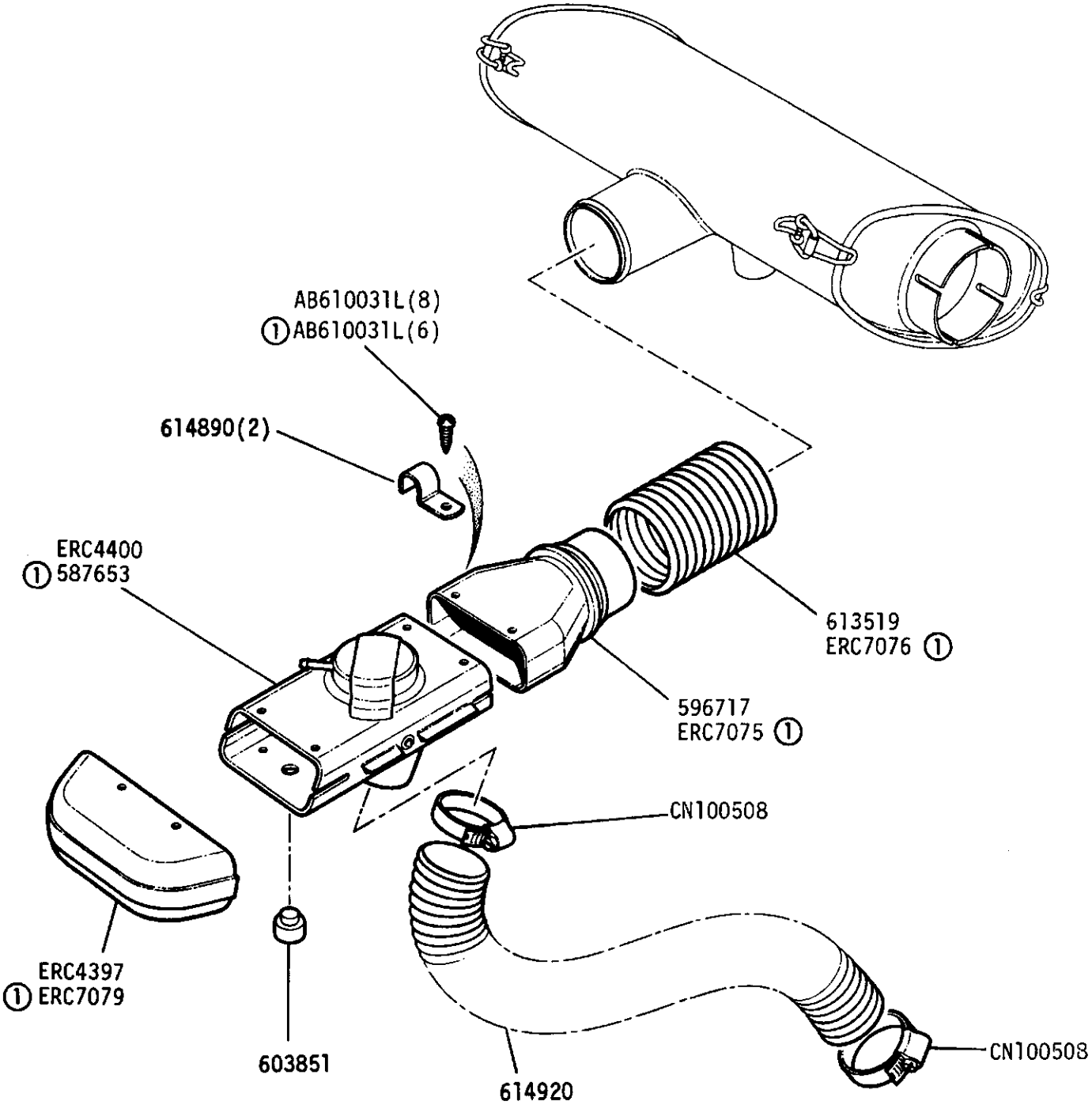

① Germany, Norway, Switzerland from August 1980 to ECE 15.03 Regulations

GROUP H

ENGINE - Fuel Pump 2¼ Litre Petrol

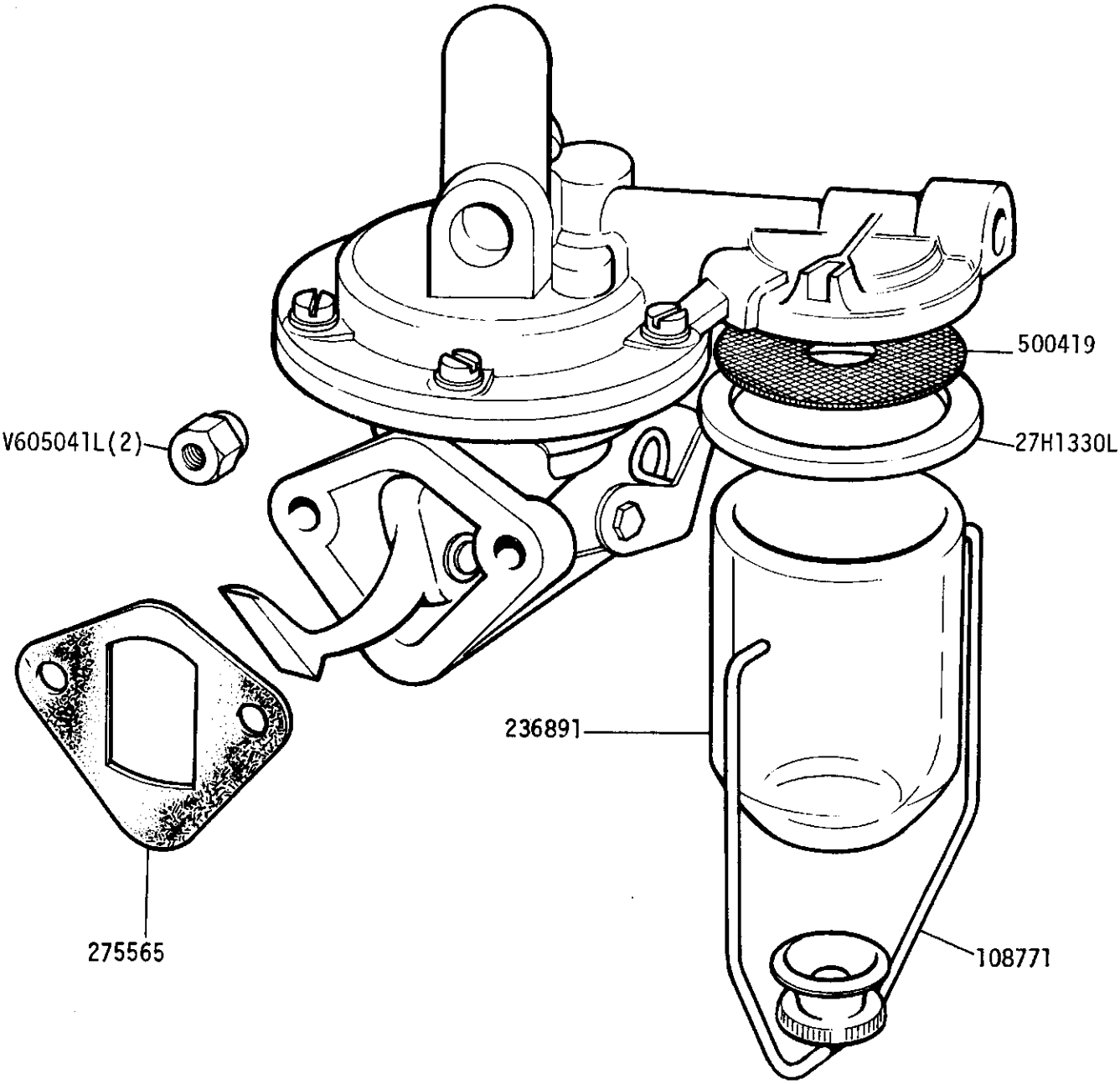

Fuel pump assembly 549761
Repair kit for fuel pump AEU2760
Overhaul kit for fuel pump 18G8246L

GROUP H
SU FUEL PUMP - Valve Body, 2.6 Litre Petrol, Vehicle Suffix 'A'

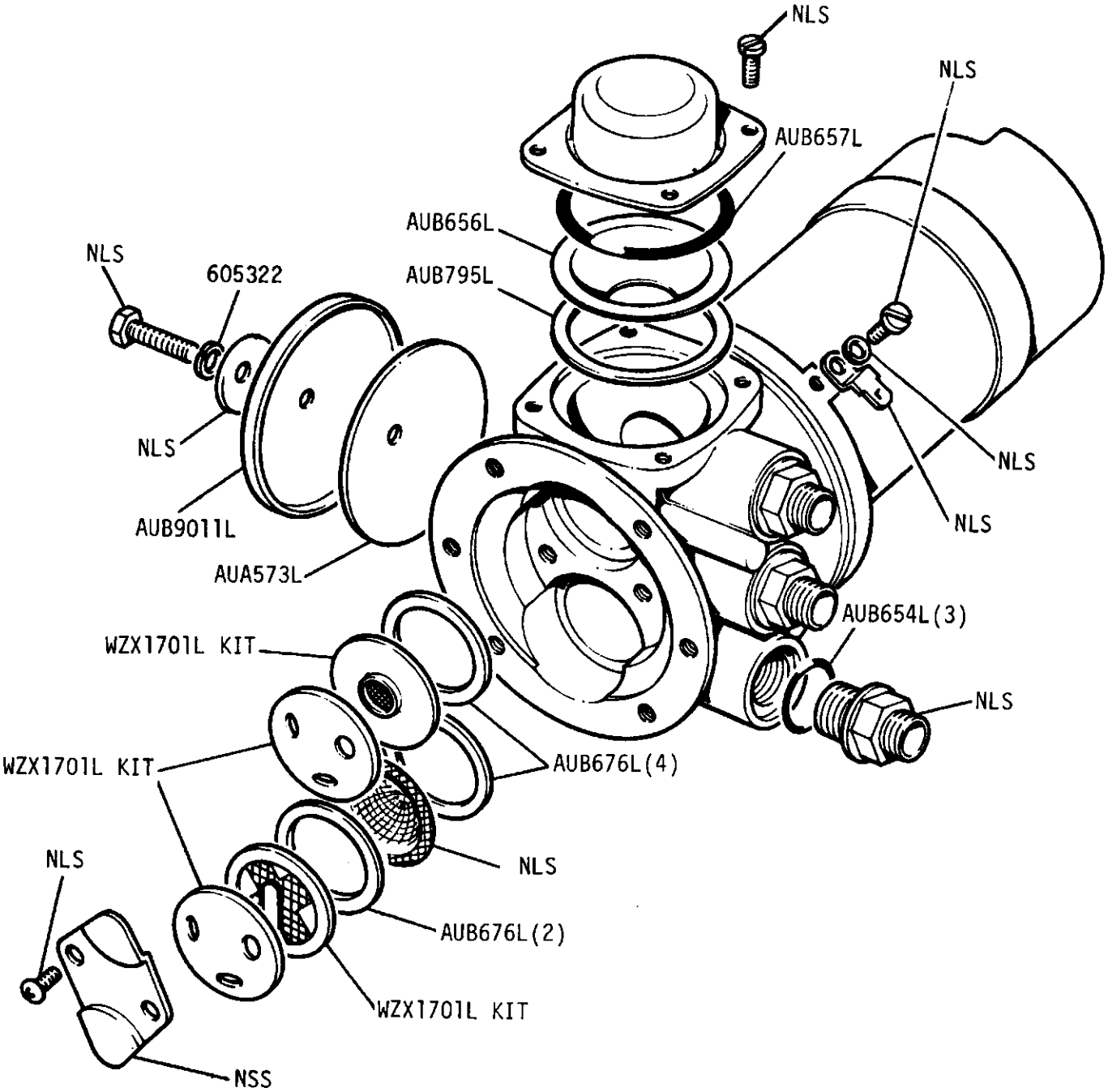

Fuel pump complete AZX1500

GROUP H

SU FUEL PUMP - Coil, Diaphragm and Pedestal 2.6 Litre Petrol - Vehicle Suffix 'A'

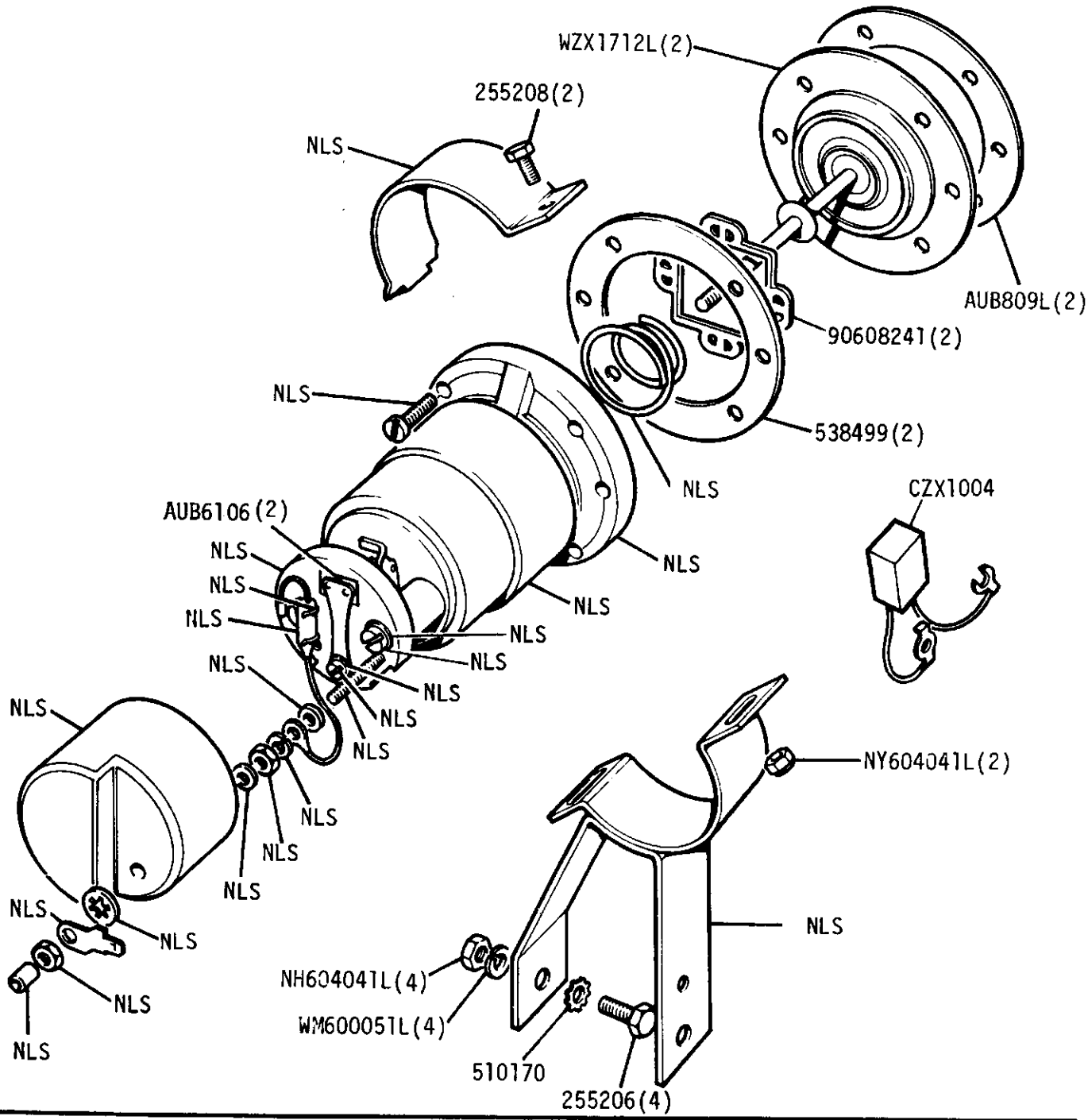

Fuel pump complete AZX1500

GROUP H

BENDIX FUEL PUMP - 2.6 Litre Petrol. Vehicle Suffix 'B' onwards

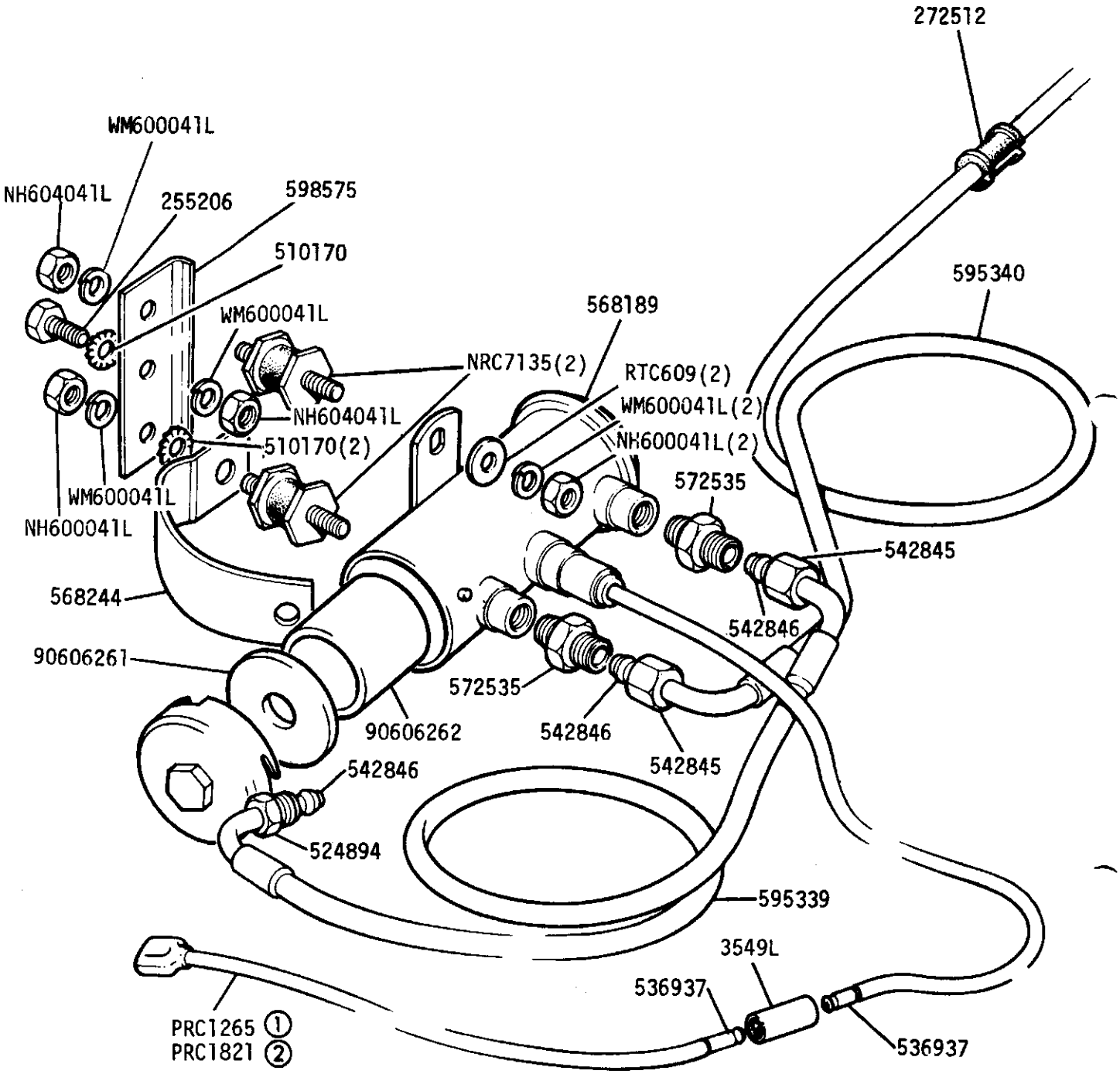

① Up to May 1978

② From June 1978

GROUP H
FUEL SYSTEM - Electric fuel pump , 109V8

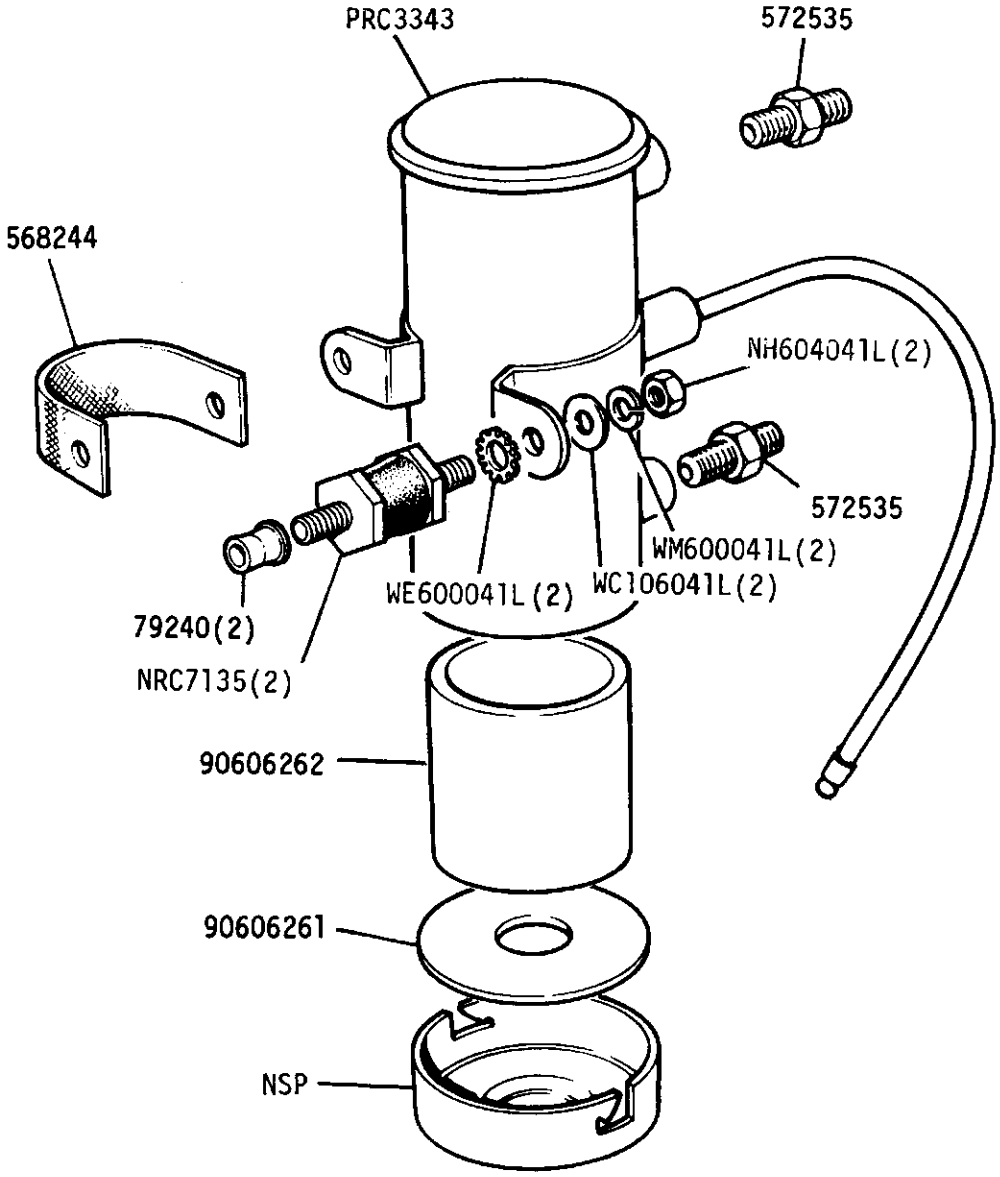

PRC3332 Earth lead
C45099 Ratchet strap

GROUP H

FUEL SYSTEM - Fuel Filter - 2.6 Litre Petrol and 109 V8.

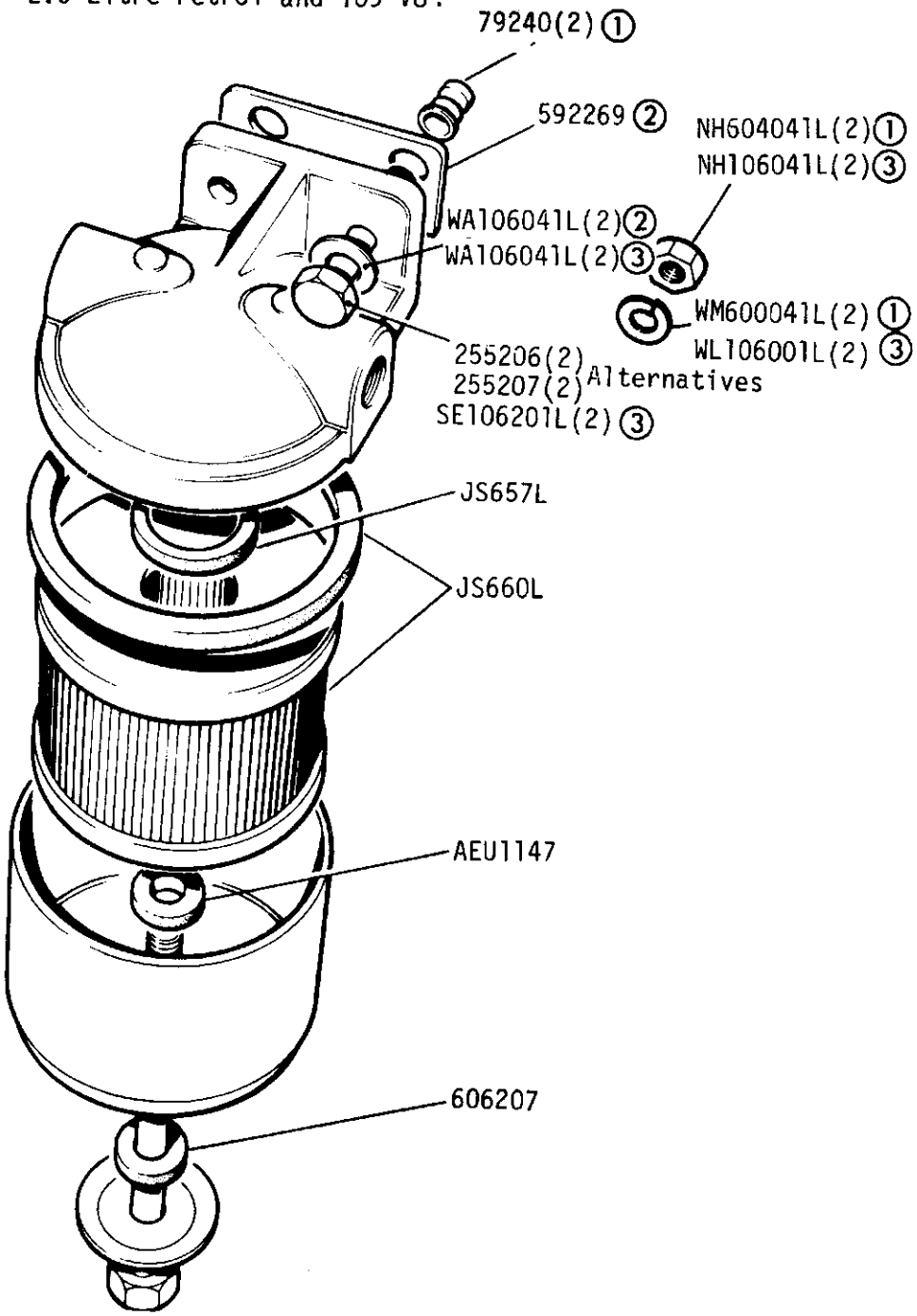

Fuel filter complete 90577508

① Alternative fixings, check before ordering

② For use with bolt 255206 only

③ Fixings for 109 V8

GROUP H

ENGINE - Distributor Pump and Injector Nozzle 2¼ Litre Diesel

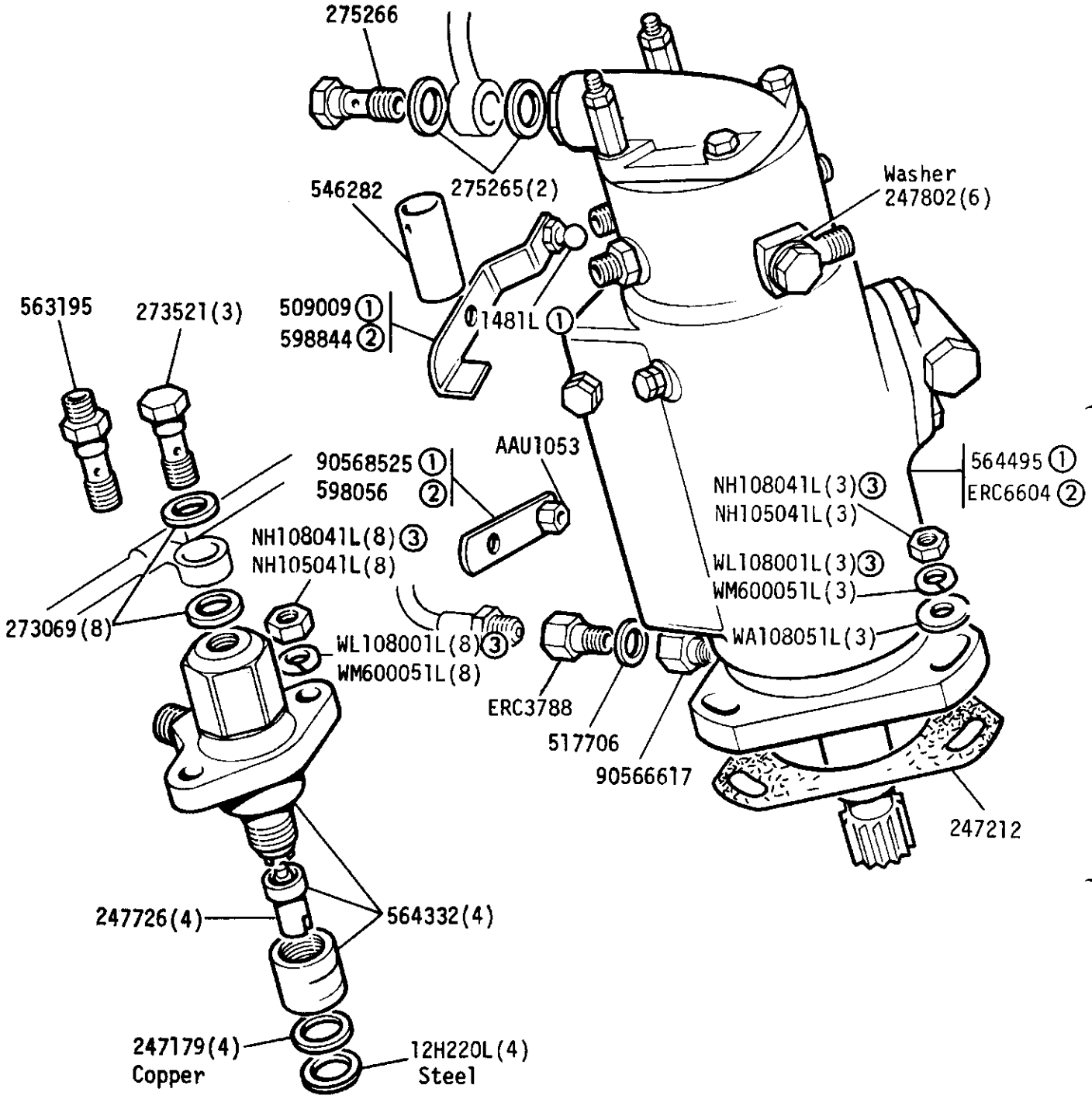

①Rod operated throttle

②Cable operated throttle

③From engine No.36619420B

GROUP H

ENGINE - Fuel Pump and Filter 2¼ Litre Diesel

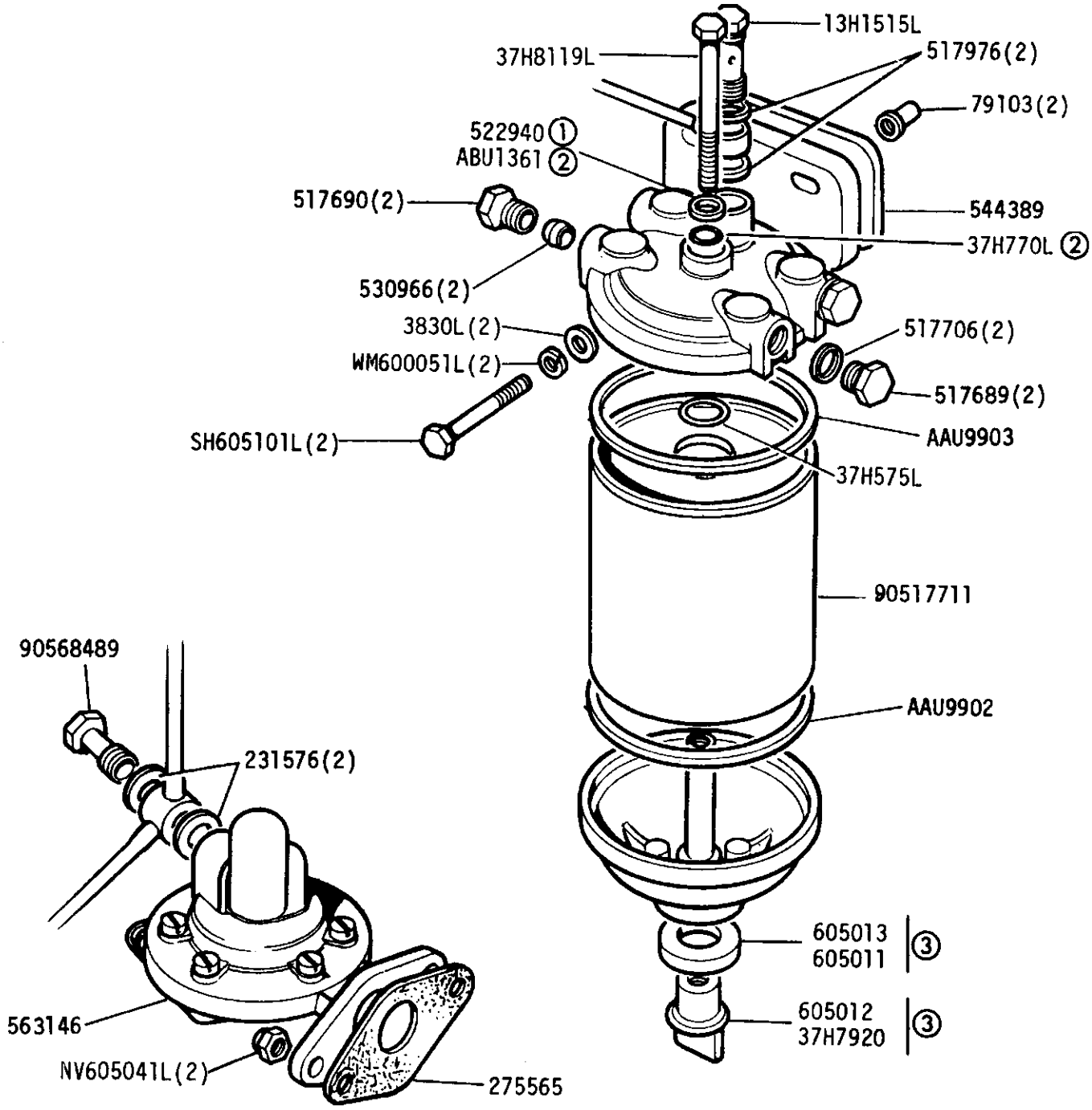

Fuel filter assembly 563190
Repair kit for fuel pump AEU2760
Overhaul kit for fuel pump 8G8845L

① Required with CAV filter part number 5836A400
② Required with CAV filter part number 5836B400
③ Alternatives

GROUP H

FUEL SYSTEM - Fuel Pipes. All 88in Petrol models inclusive - 109in 4 cyl. Petrol up to vehicle suffix 'B' inclusive

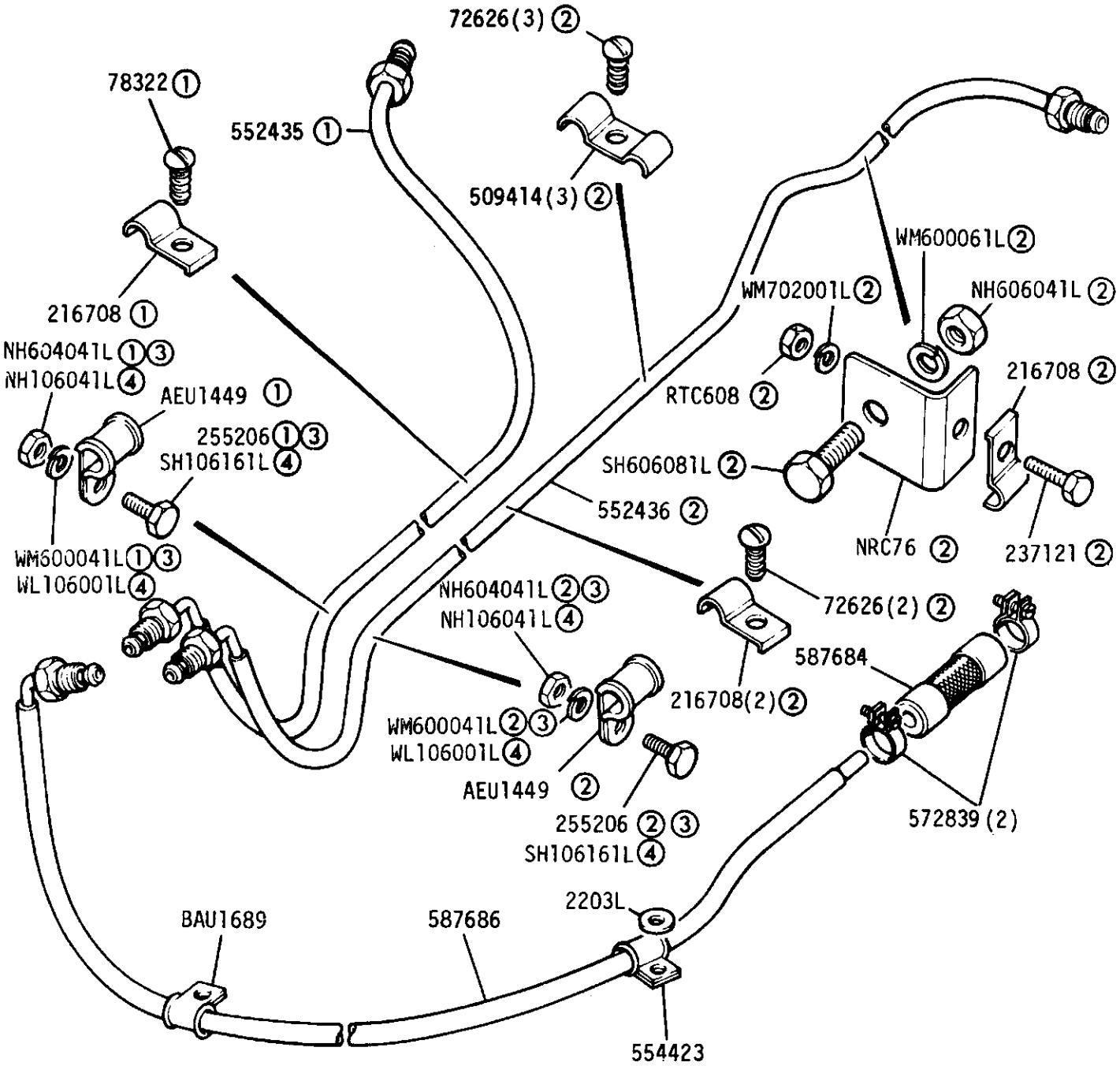

① Except 109 Station Wagon
② 109 Station Wagon
③ UNF
④ METRIC

GROUP H

FUEL SYSTEM - Fuel Pipes all 109in 4cyl Petrol models from Vehicle suffix 'C' onwards

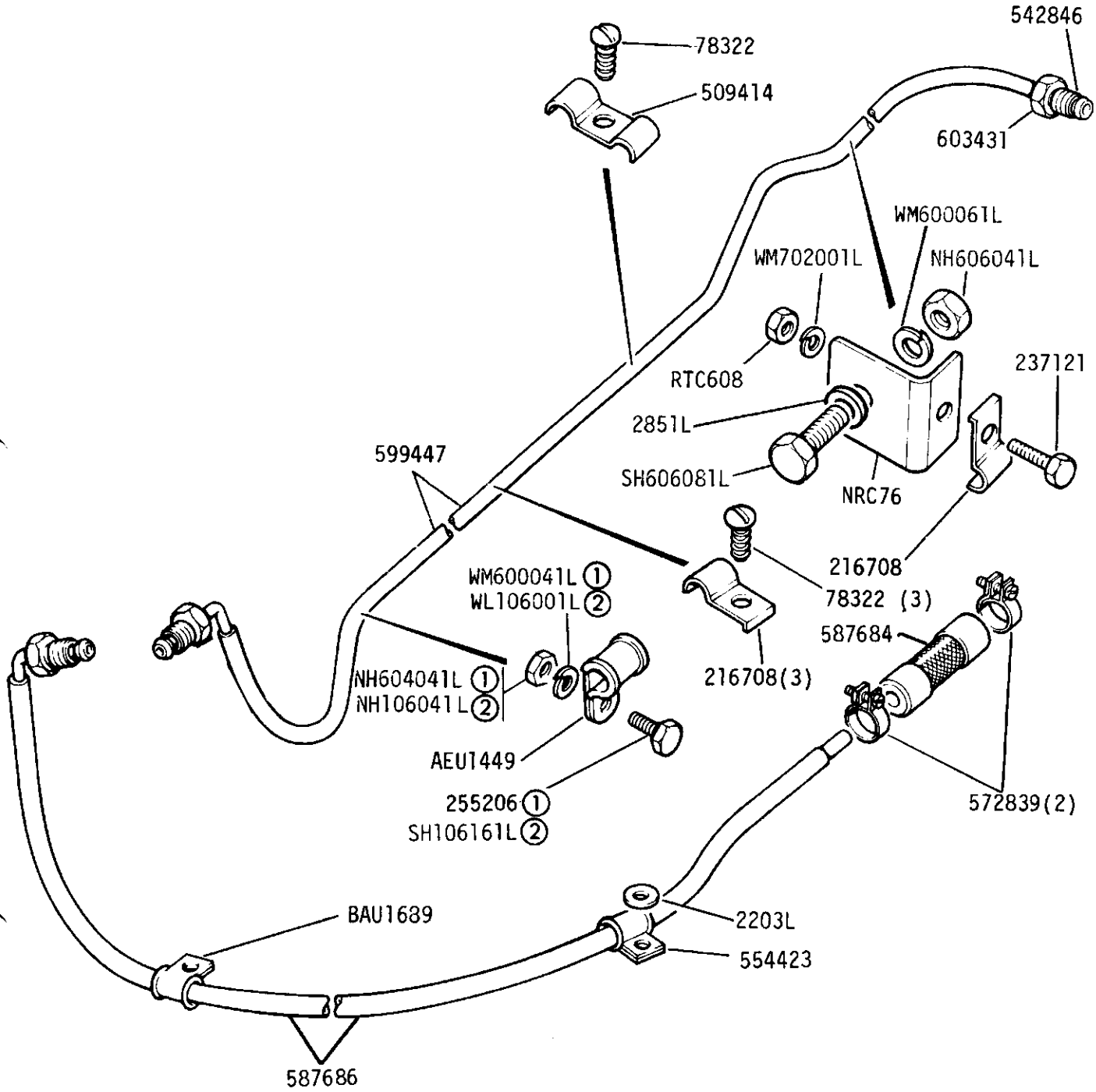

① UNF
② METRIC

GROUP H
FUEL SYSTEM - Fuel Pipes - 2.6 Litre Petrol

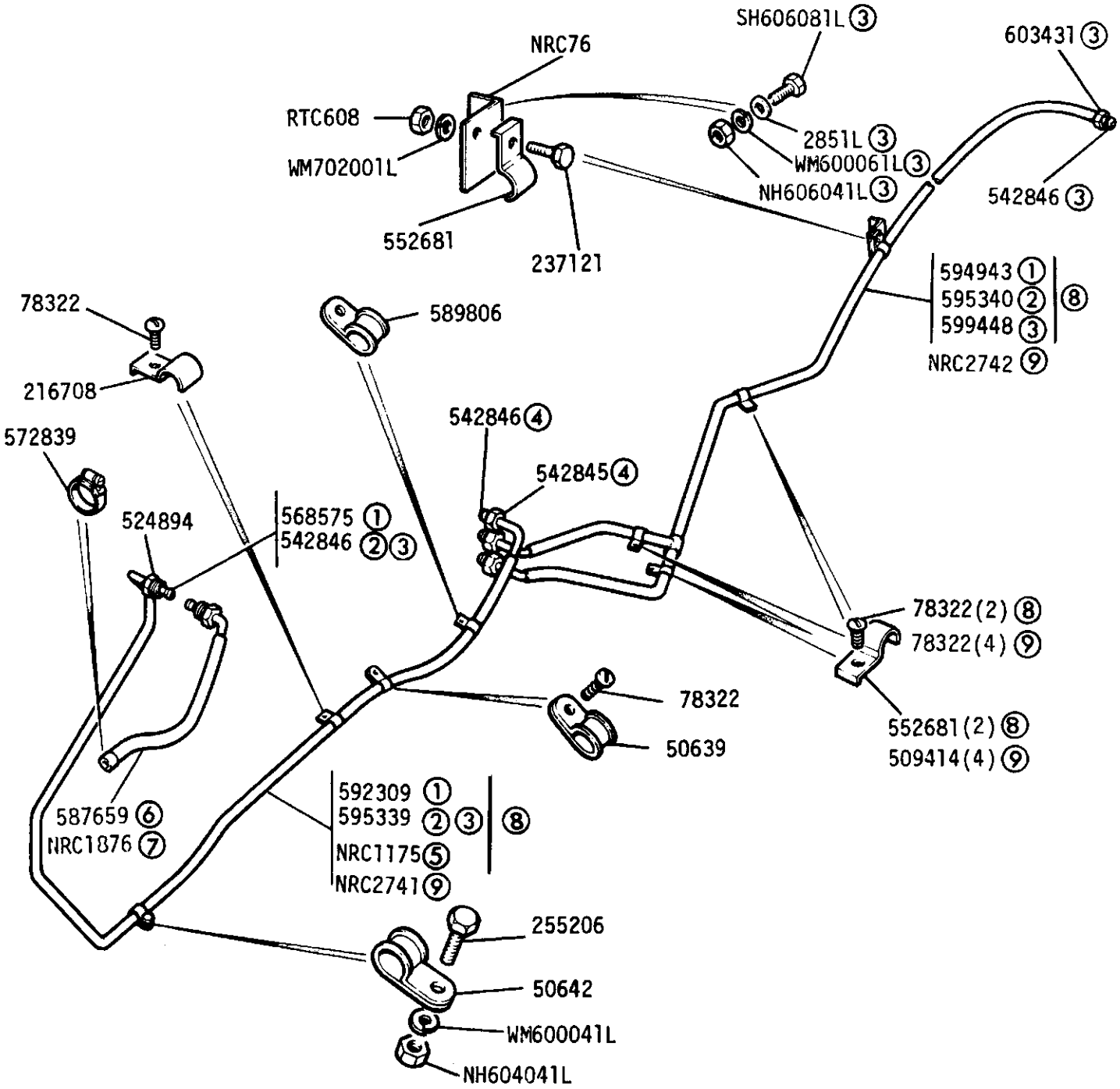

① Up to vehicle suffix 'A'
② Vehicle 'suffix 'B'
③ Vehicle suffix 'C' onwards
④ 2 off from vehicle suffix 'B' onwards
⑤ For use with Petro-flex pipe NRC1876
⑥ Up to October 1974
⑦ From November 1974 onwards
⑧ Horizontal mounted Fuel Pump
⑨ Vertical mounted Fuel Pump

GROUP H
FUEL SYSTEM - Fuel pipes, 109V8

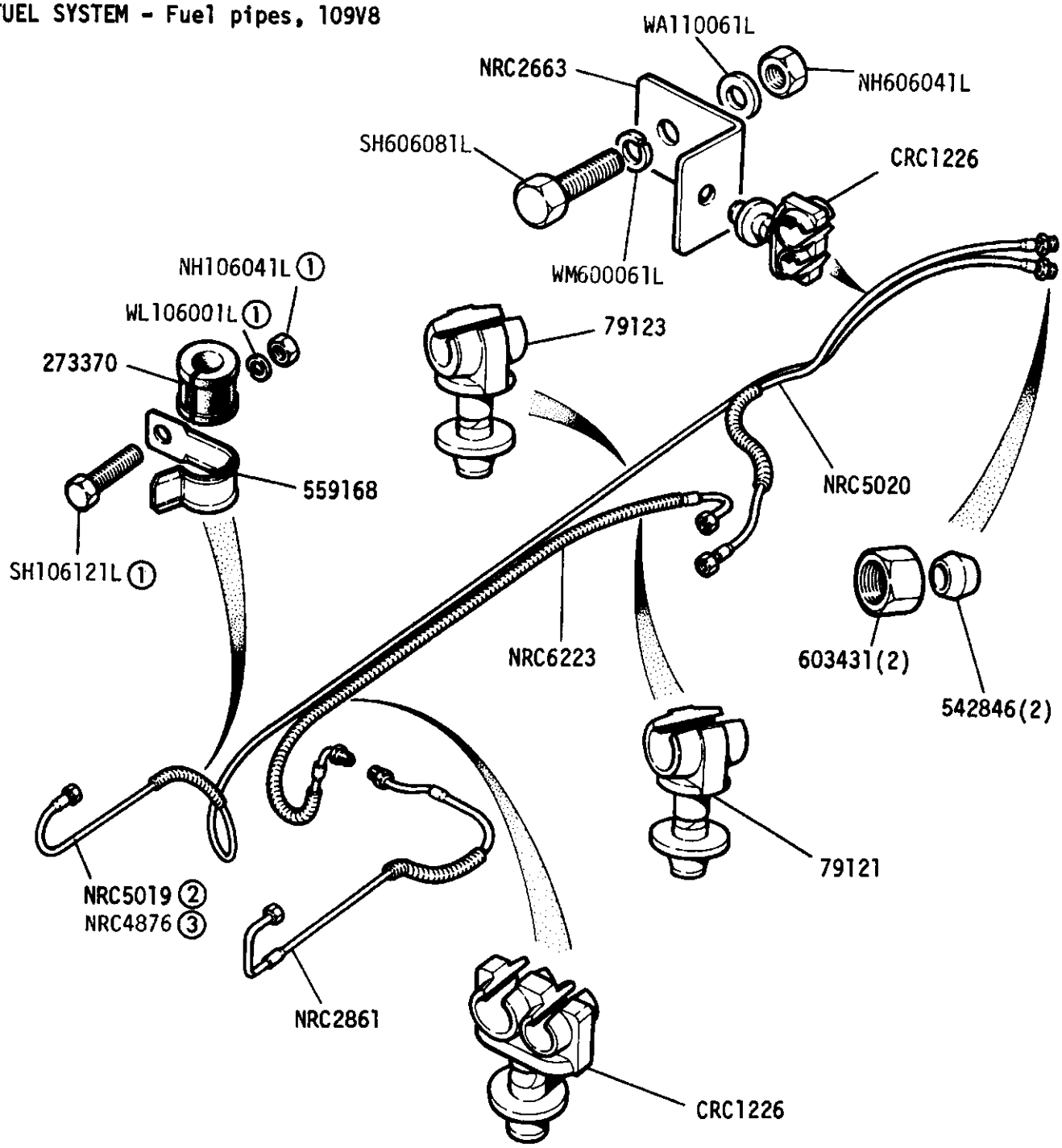

① vehicles
② Upto February 1982
③ From March 1982

GROUP H

FUEL SYSTEM - Pipes - Fuel Injection all 88in 2¼ Litre Diesel, 109in 2¼ Litre Diesel up to Vehicle suffix 'B' inclusive

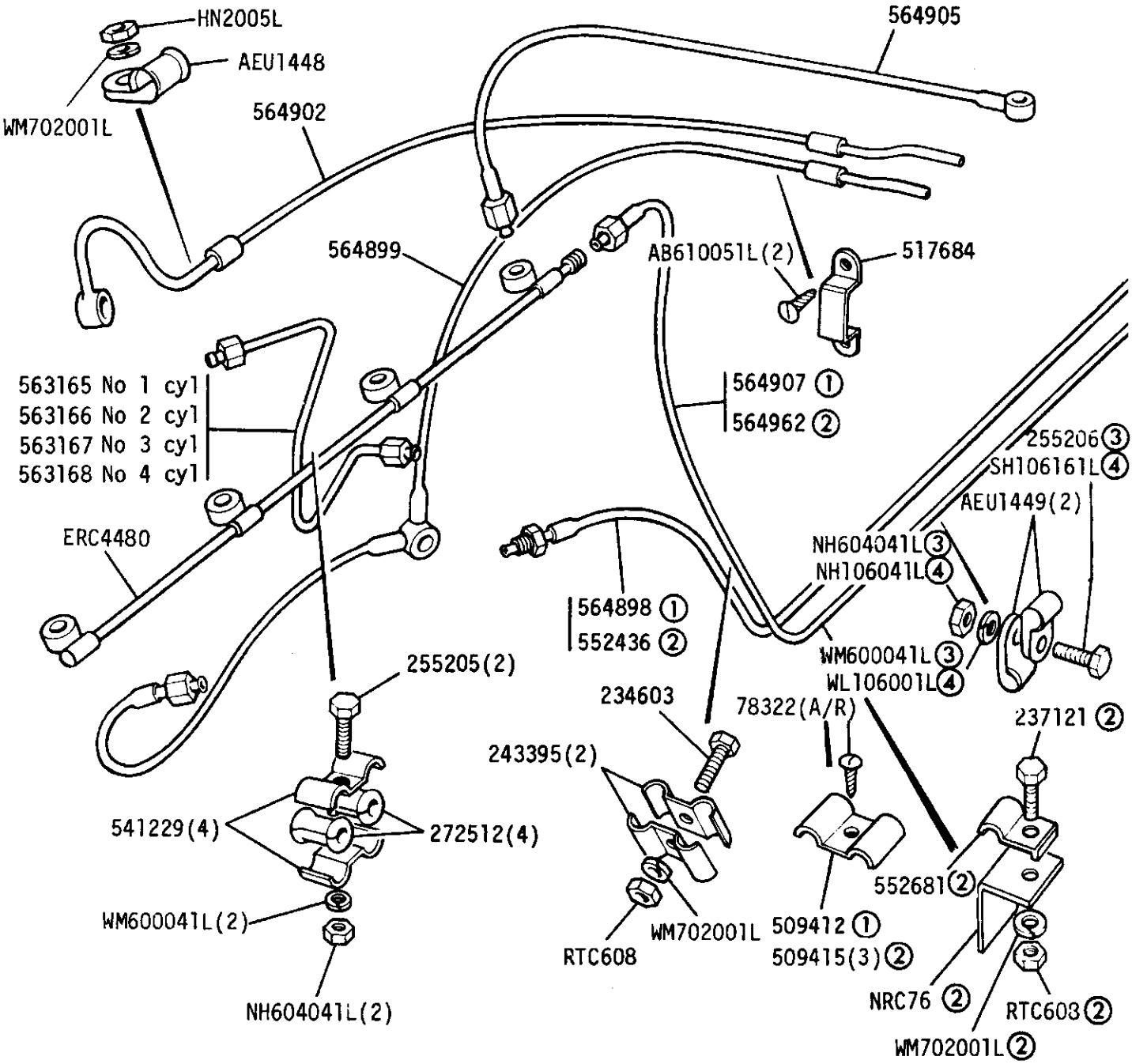

① Except 109 Station Wagon
② 109 Station Wagon
③ UNF
④ METRIC

GROUP H

FUEL SYSTEM - Pipes Fuel Injection 109in 2¼Litre Diesel from Vehicle suffix 'C' onwards

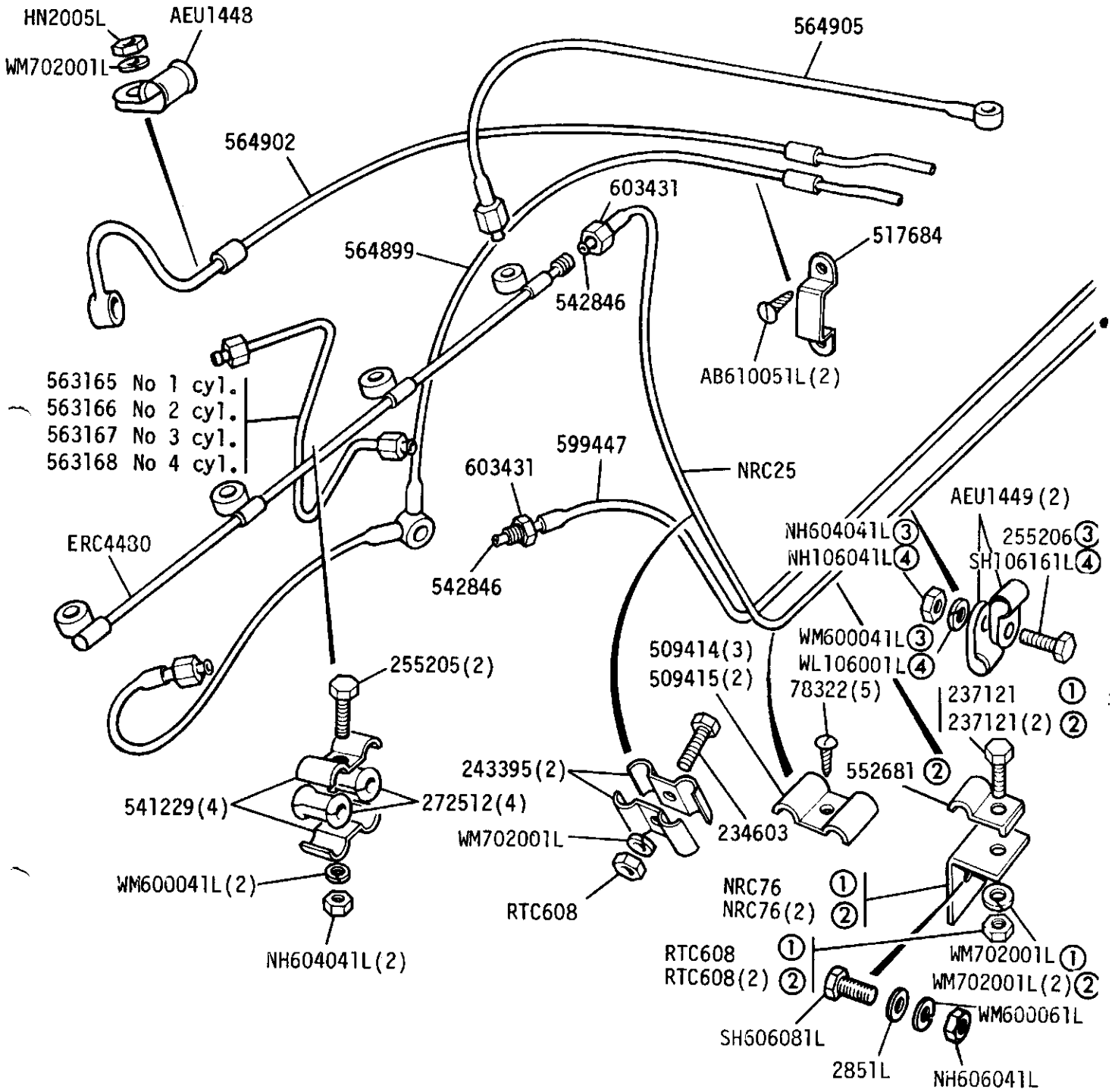

① Except 109 Station Wagon

② 109 Station Wagon

③ UNF

④ METRIC

GROUP H

FUEL SYSTEM - Fuel Filler - All 88in models inclusive.109in 4cyl except Station Wagon up to Vehicle suffix 'B' inclusive

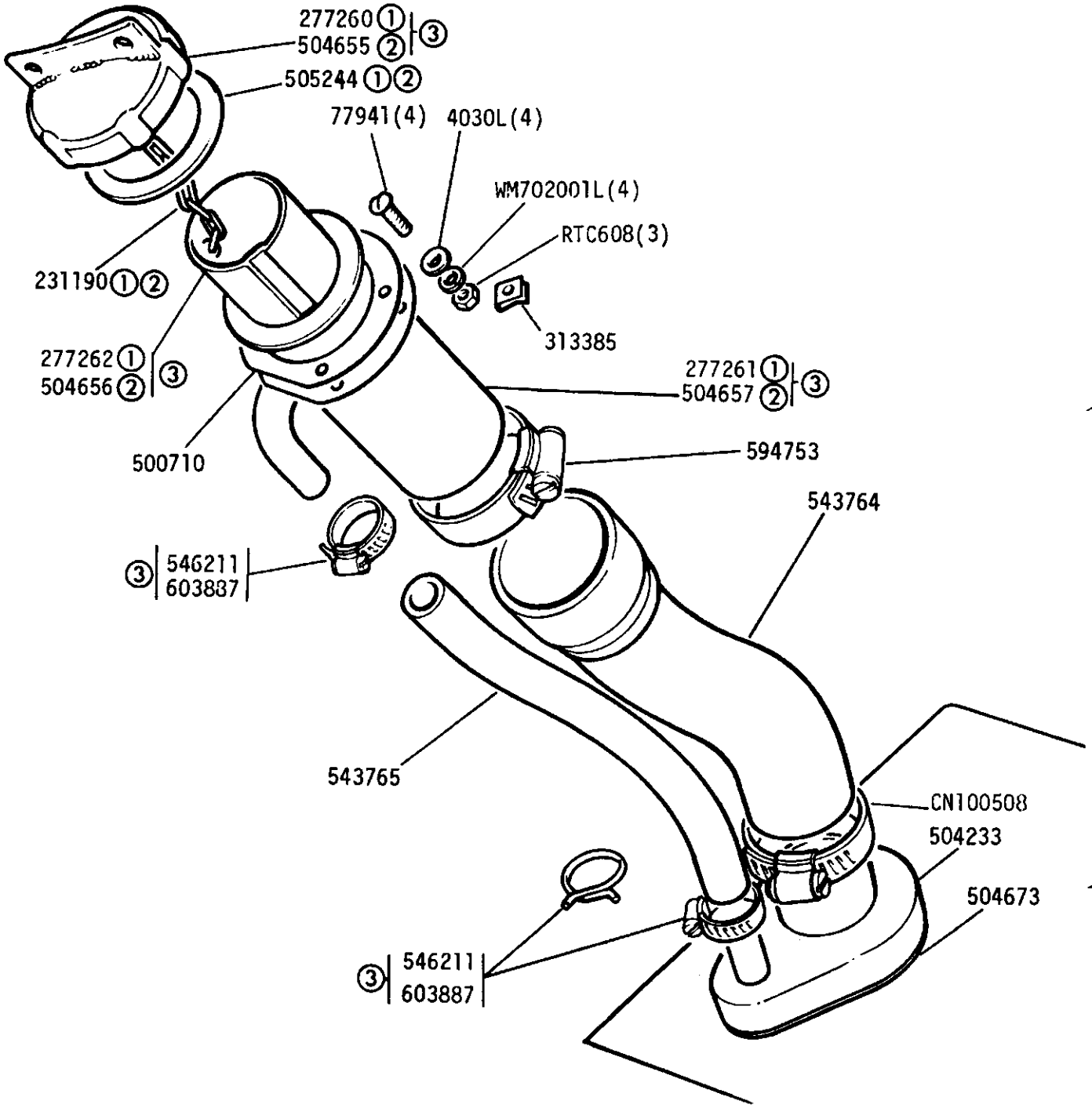

Filler tube complete 277259

① Required when stepped tube is fitted
② Required when plain tube is fitted
③ Alternatives-check before ordering

GROUP H

FUEL SYSTEM - Fuel Filler - 109in 4cyl except Station Wagon from Vehicle suffix 'C' onwards

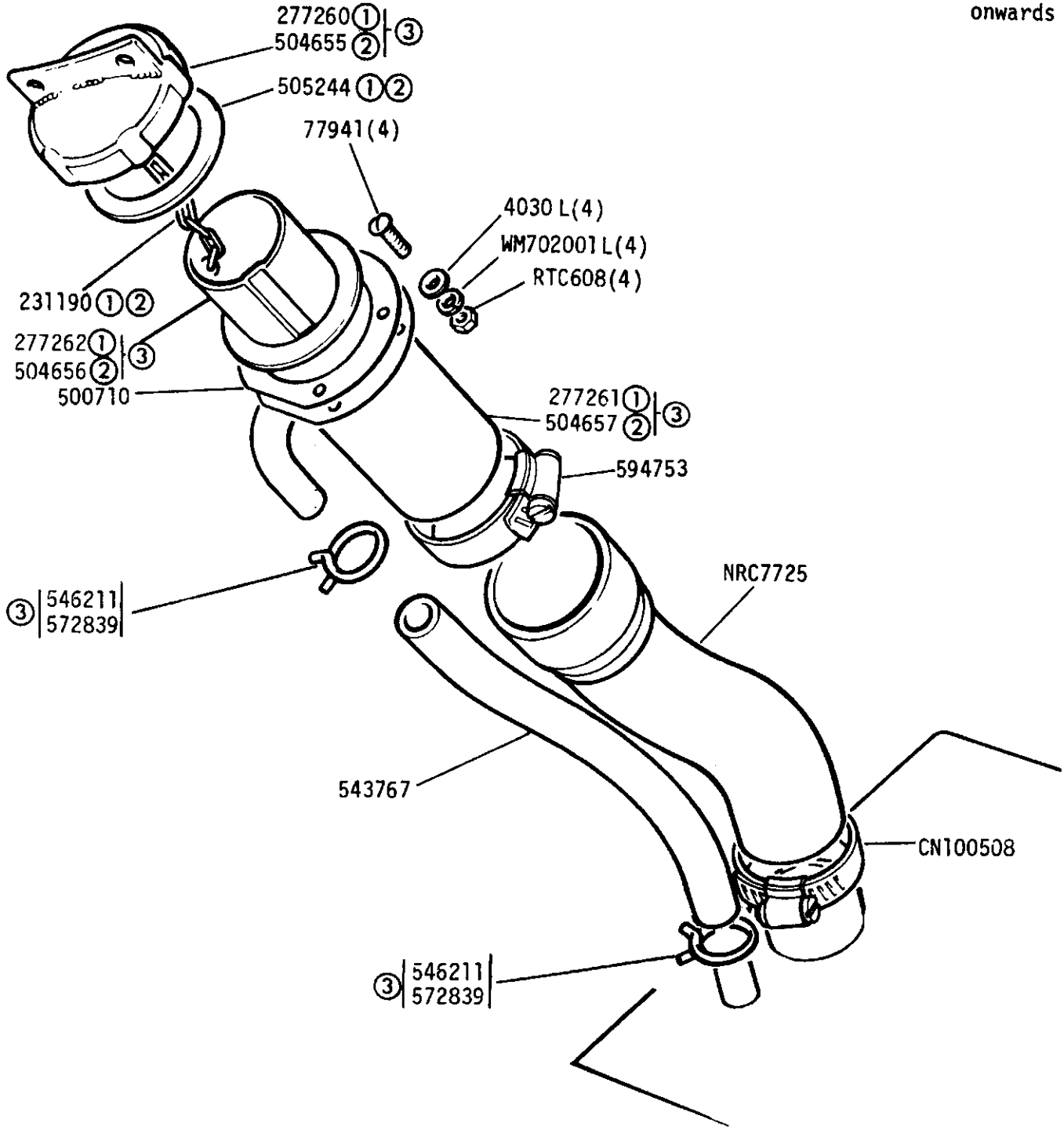

Filler tube complete 277259

① Required when stepped tube is fitted

② Required when plain tube is fitted

③ Alternatives-check before ordering

GROUP H

FUEL SYSTEM - Fuel Filler 4cyl 109in Station Wagon up to Vehicle suffix 'B' inclusive

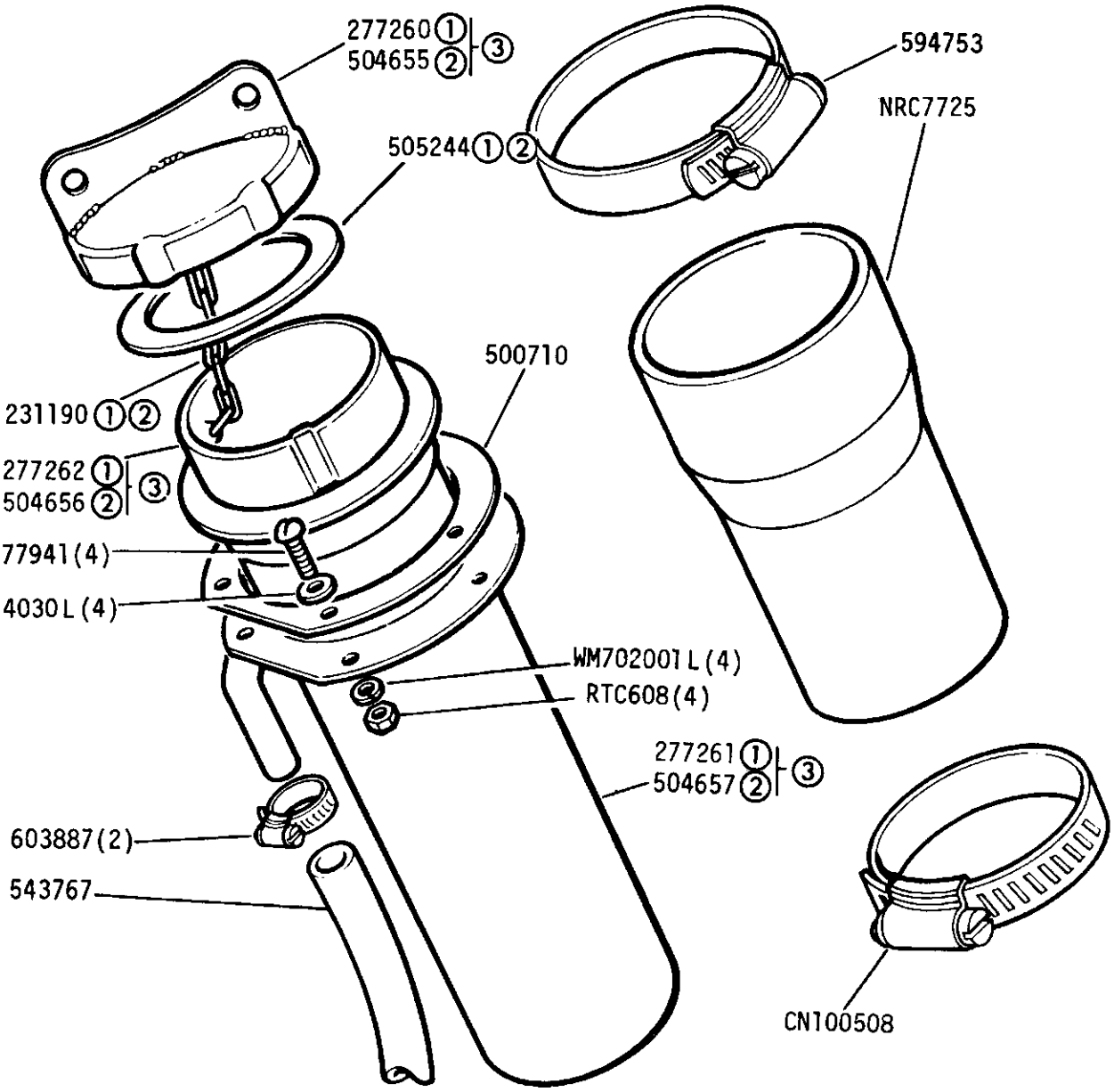

Filler tube complete 277259

① Required when stepped tube is fitted

② Required when plain tube is fitted

③ Alternatives-check before ordering

GROUP H

FUEL SYSTEM - Fuel Filler 4cyl 109in Station Wagon from Vehicle suffix 'C' onwards and 109in V8 vehicles

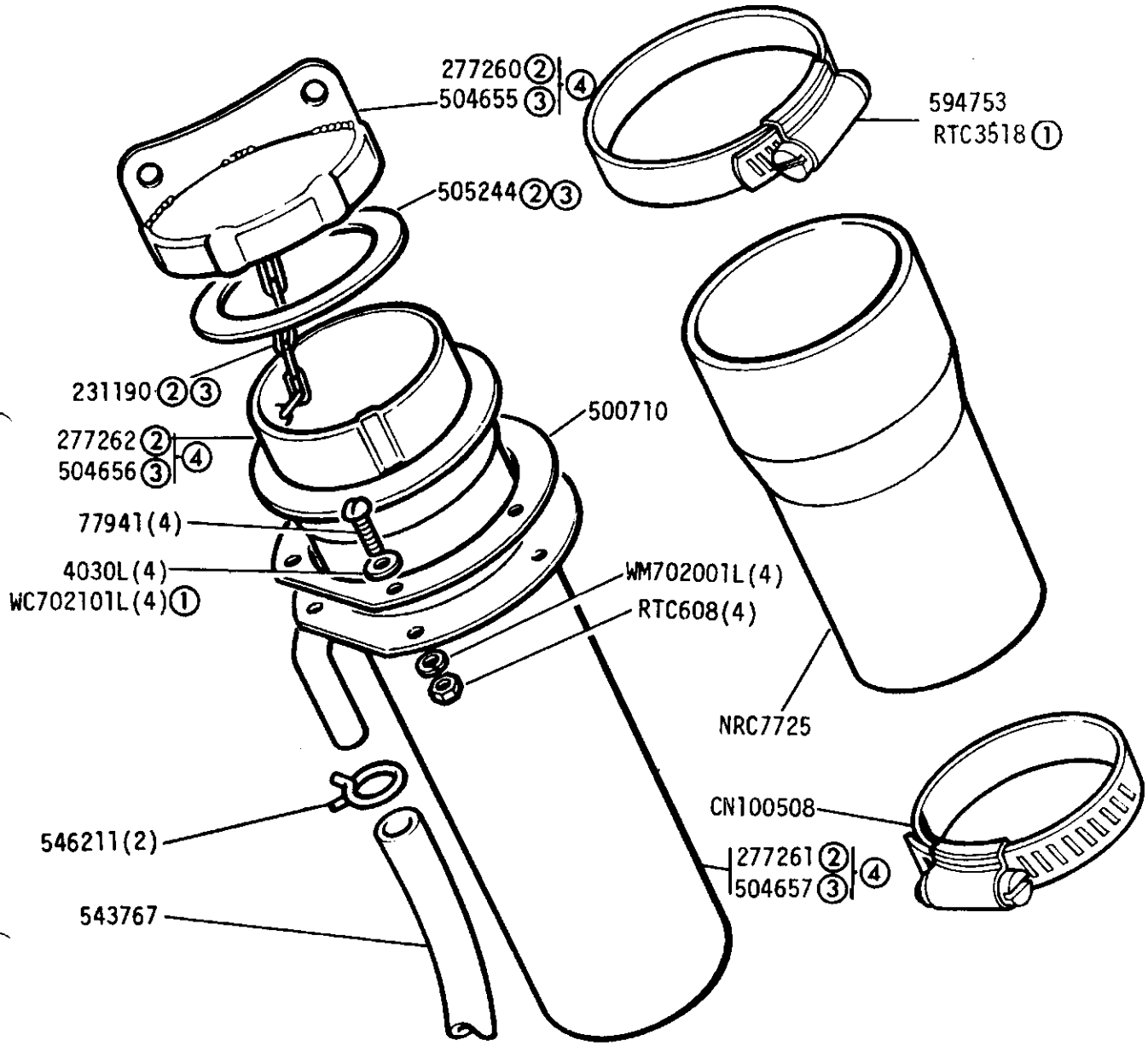

Filler tube complete 277259

① 109 V8 Vehicles
② Required when stepped tube is fitted
③ Required when plain tube is fitted
④ Alternatives-check before ordering

FUEL SYSTEM - Fuel Filler - 2.6 Litre Petrol

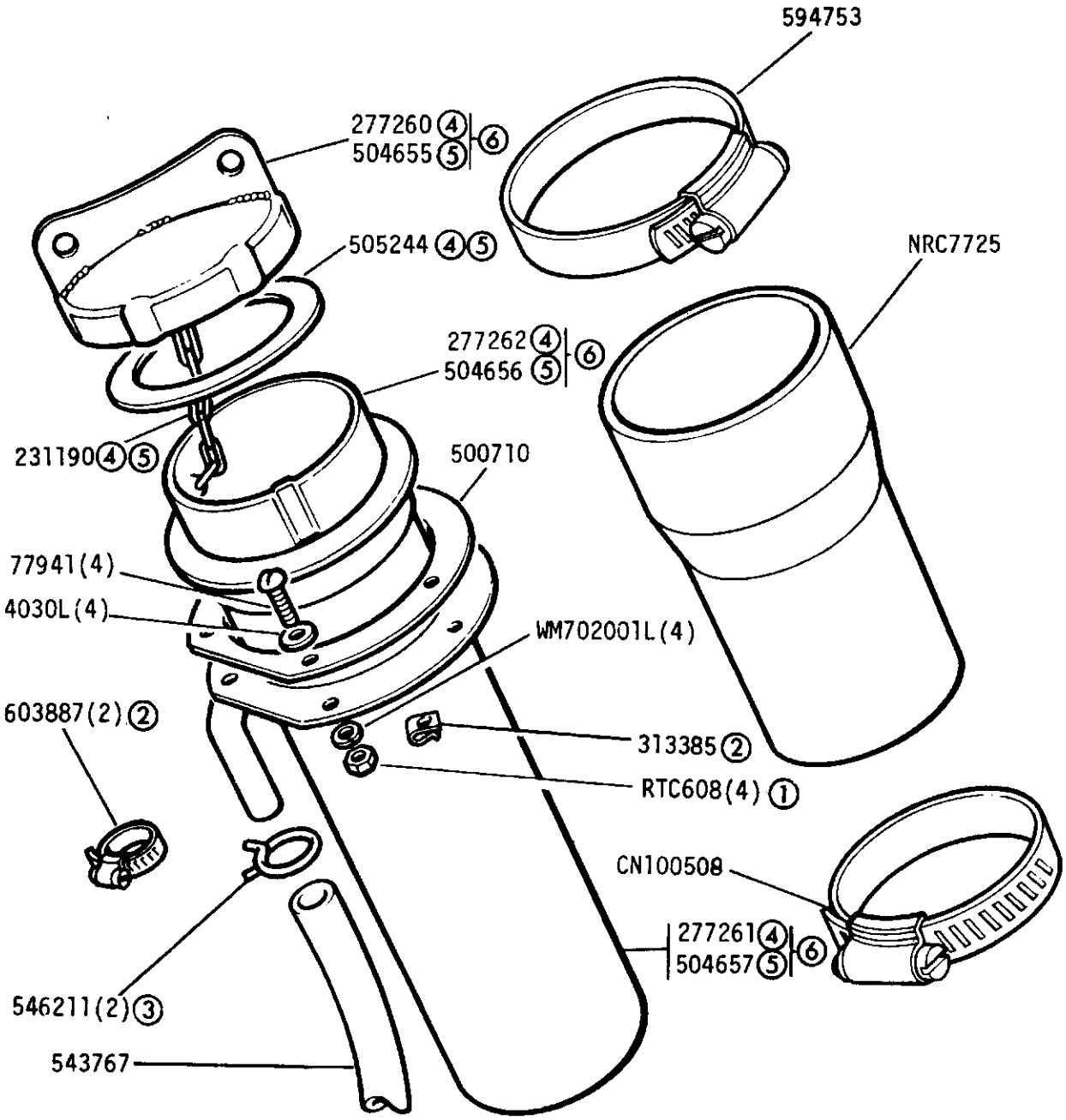

Filler tube complete 277259

① Up to vehicle suffix 'B' 3 required

② Up to vehicle suffix 'B' inclusive

③ From vehicle suffix 'C' onwards

④ Required when stepped tube is fitted

⑤ Required when plain tube is fitted

⑥ Alternatives-check before ordering

GROUP H

FUEL SYSTEM - Fuel filler 88in

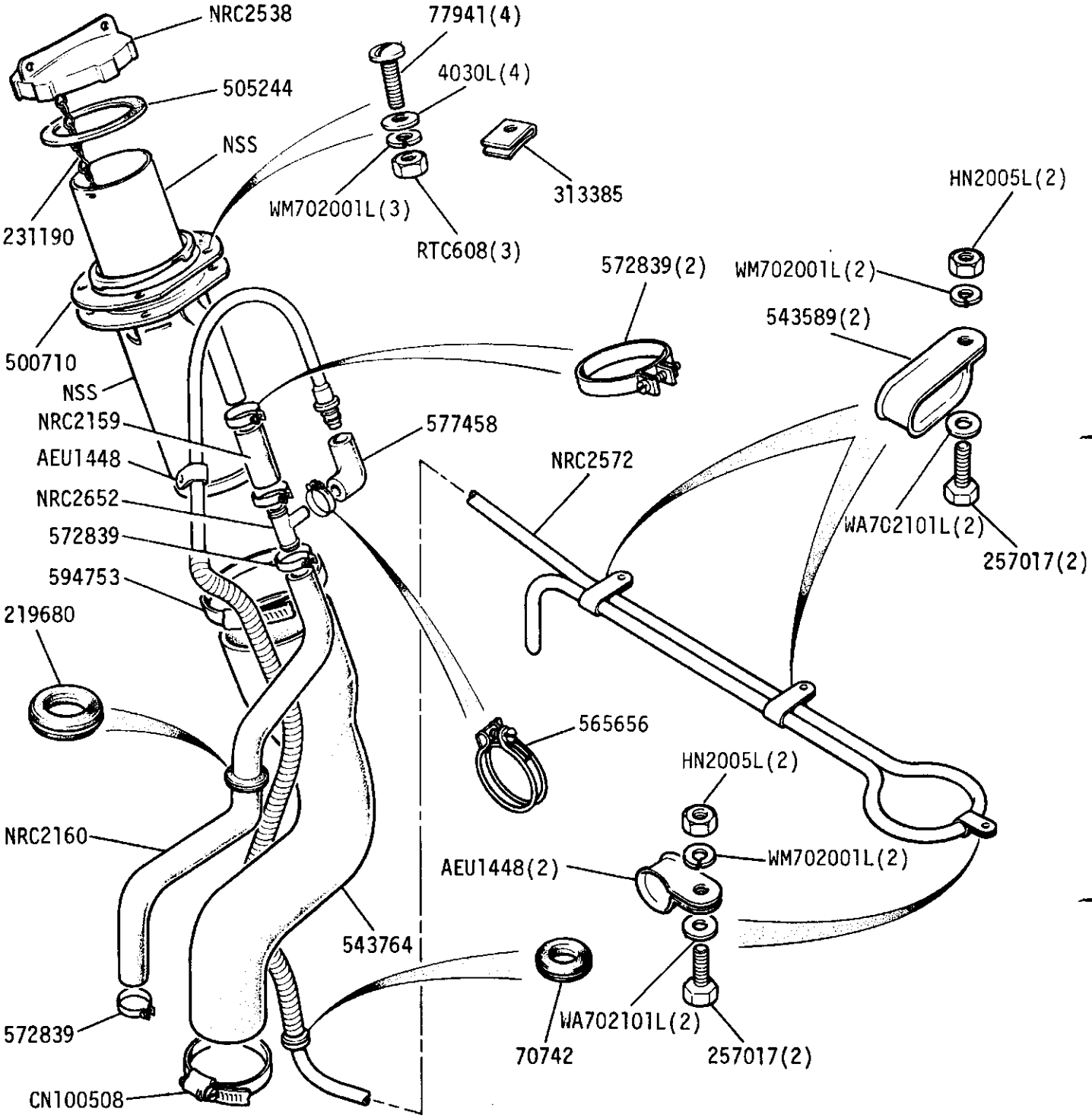

Filler tube complete NRC2536 for Italian market

GROUP H

FUEL SYSTEM - Fuel Filler - 109in all models including H.C.P.U.

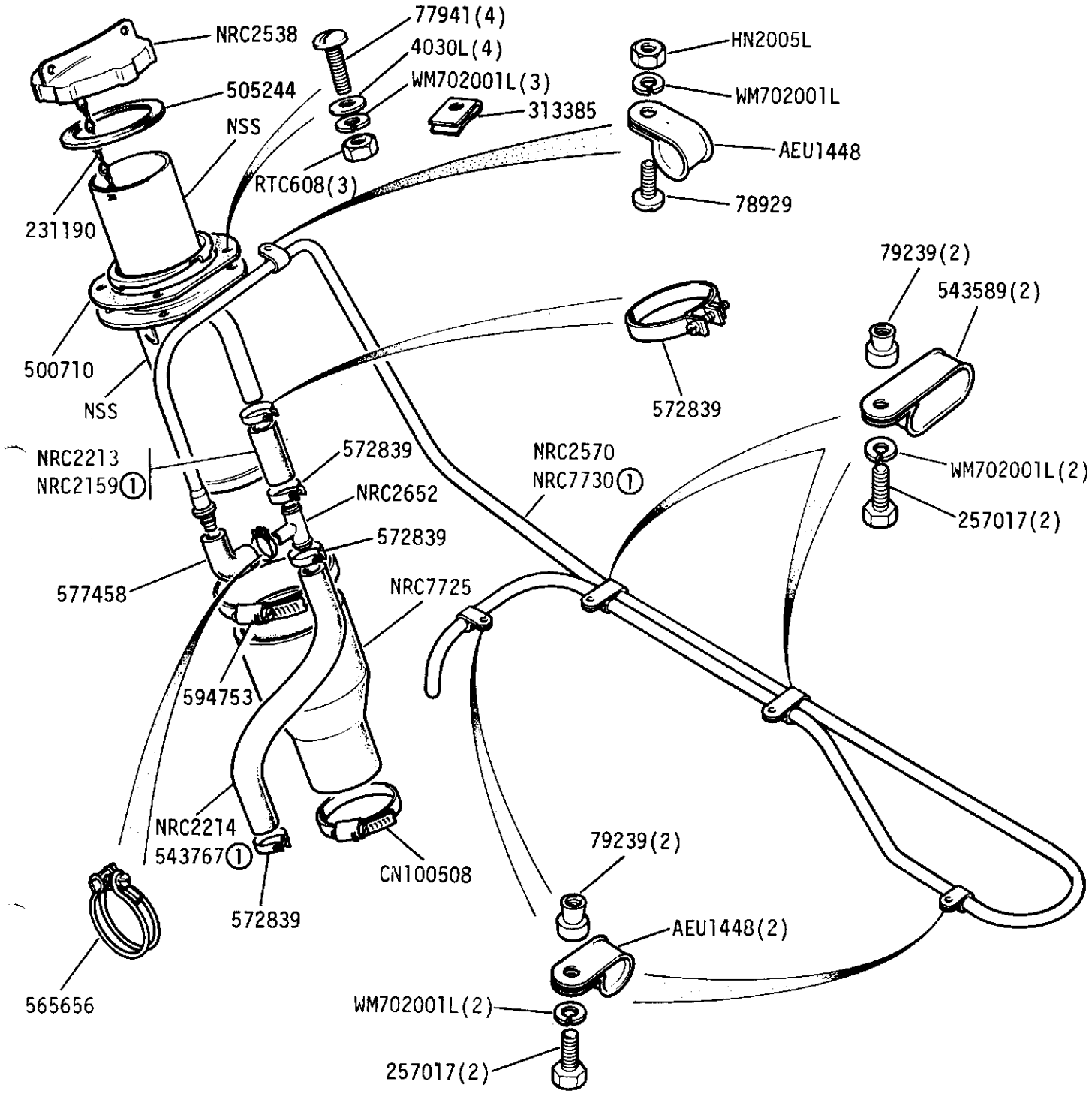

Filler Tube complete, NRC2536 - for Italian market and all H.C.P.U.

①H.C.P.U. only.

GROUP H

FUEL SYSTEM - Fuel tank. All 88in inclusive 109in 4 cyl. except Station Wagon up to Vehicle suffix 'B' inclusive

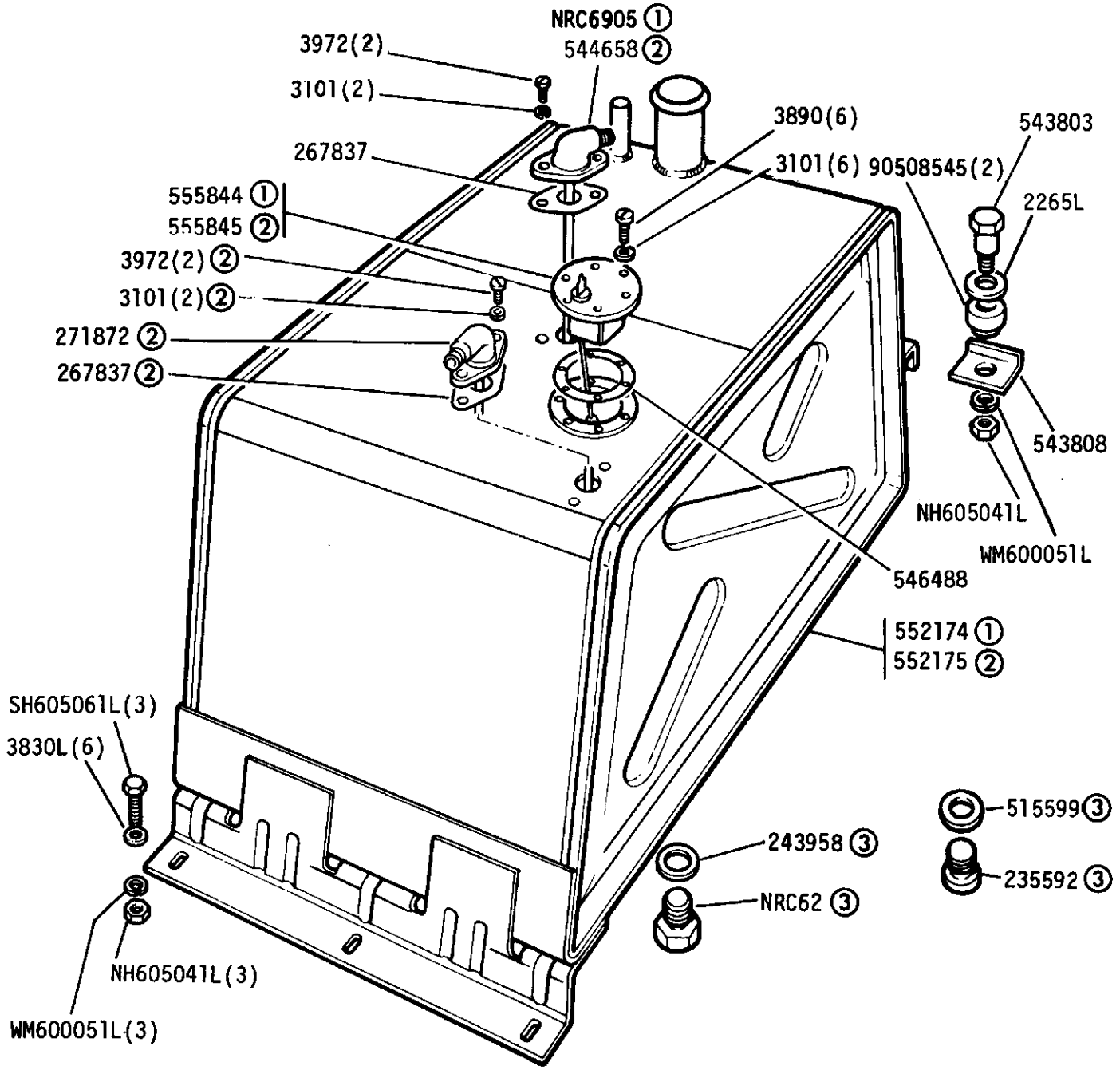

① Petrol
② Diesel
③ Alternatives

GROUP H
FUEL SYSTEM - Fuel Tank - 109in 4cyl Station Wagon up to Vehicle suffix'B'inclusive

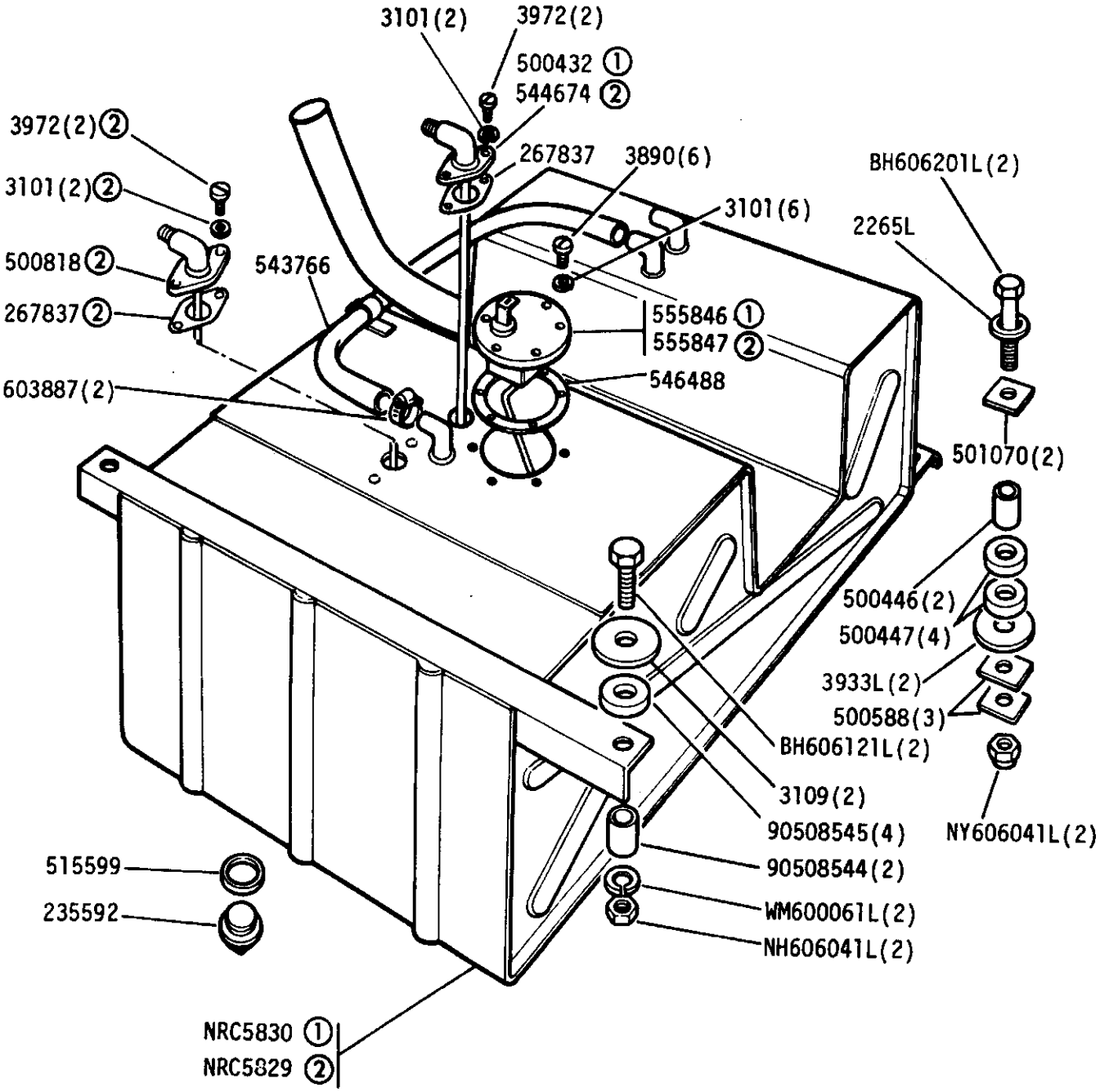

① Petrol
② Diesel

GROUP H
FUEL SYSTEM - Fuel tank. All 109in 4 cyl. models from Vehicle suffix 'C' onwards

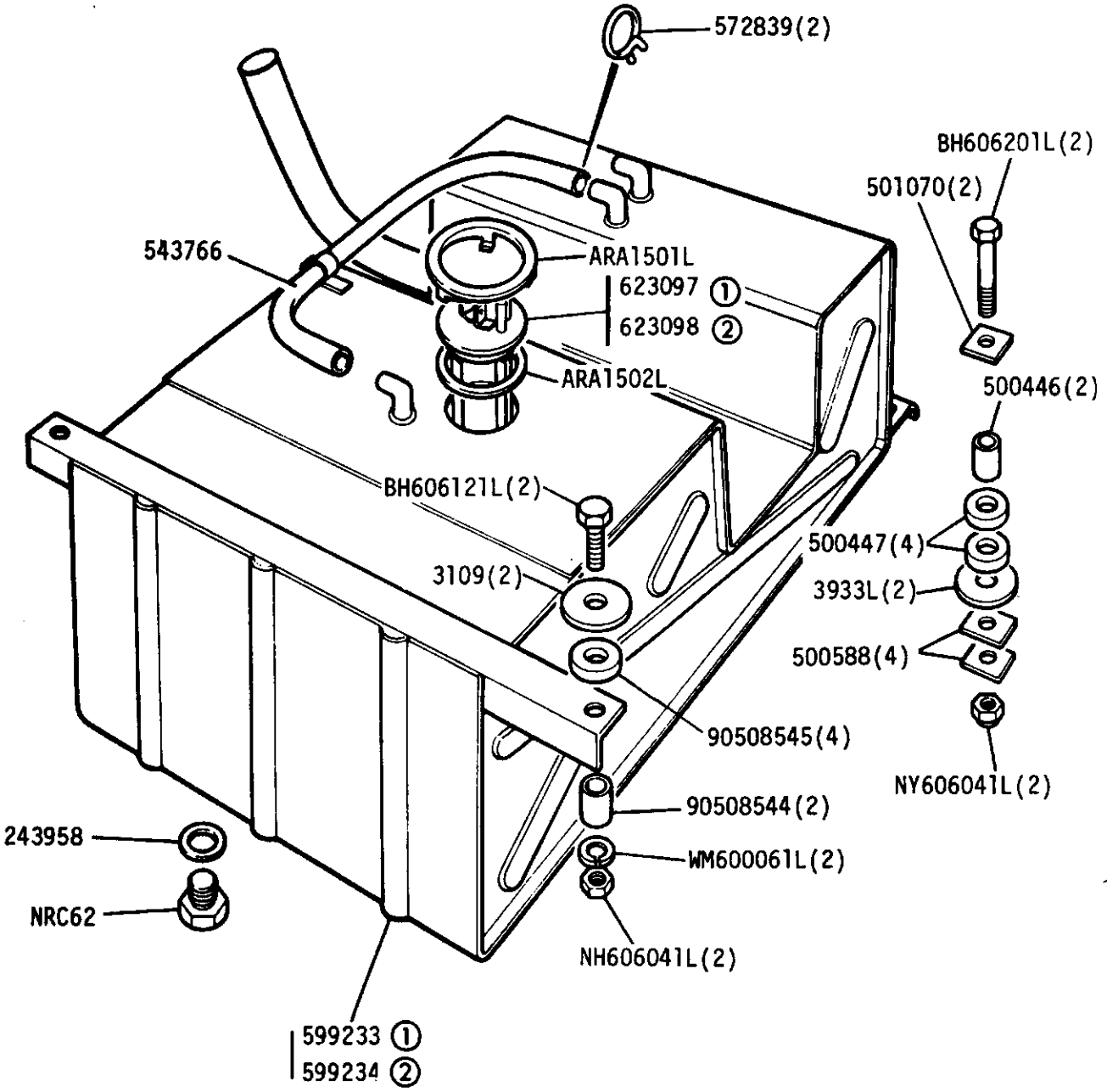

① Petrol
② Diesel

FUEL SYSTEM - Fuel Tank - 2.6 Litre Petrol up to Vehicle suffix 'B' inclusive

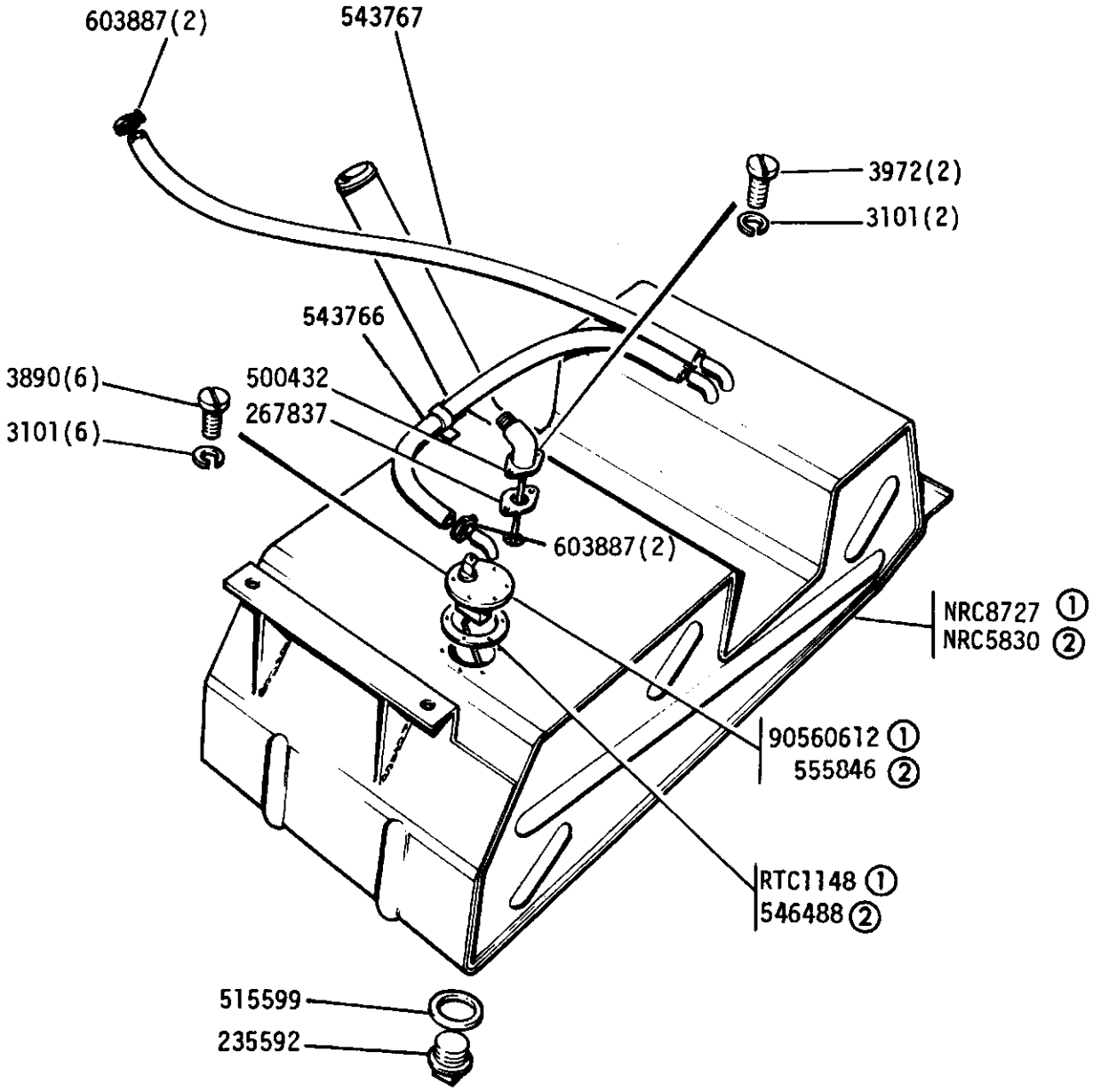

① Except Station Wagon
② Station Wagon

UEL SYSTEM - Fuel Tank 2.6 Litre Petrol-From Vehicle Suffix 'C' onwards

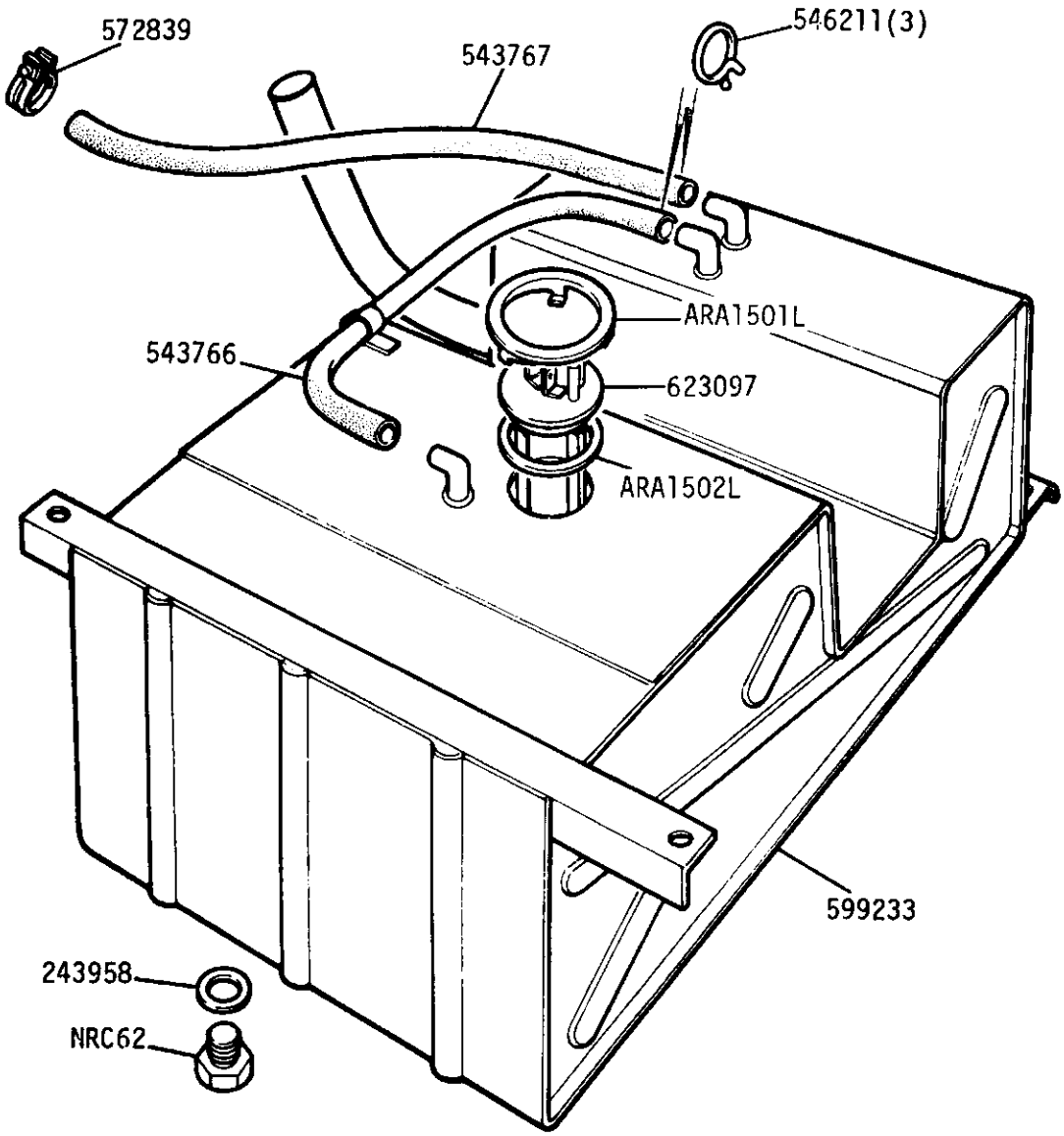

GROUP H
FUEL SYSTEM - Fuel Tank Mounting - 2.6 Litre Petrol Except Station Wagon up to Vehicle suffix 'B' inclusive

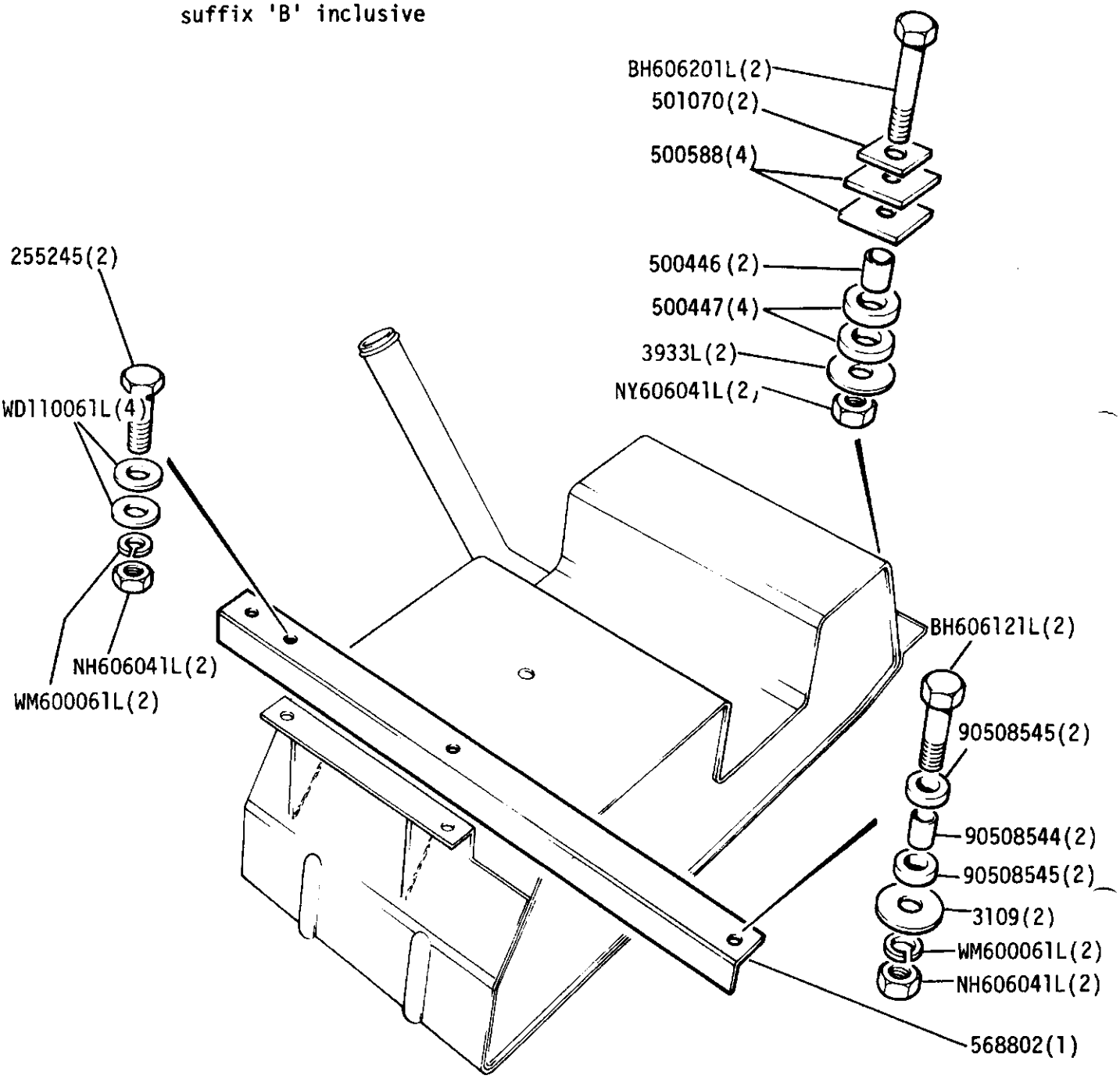

GROUP H

FUEL SYSTEM - Fuel Tank Mountings 2.6 Litre Petrol - Station Wagon up to Vehicle suffix 'B' inclusive

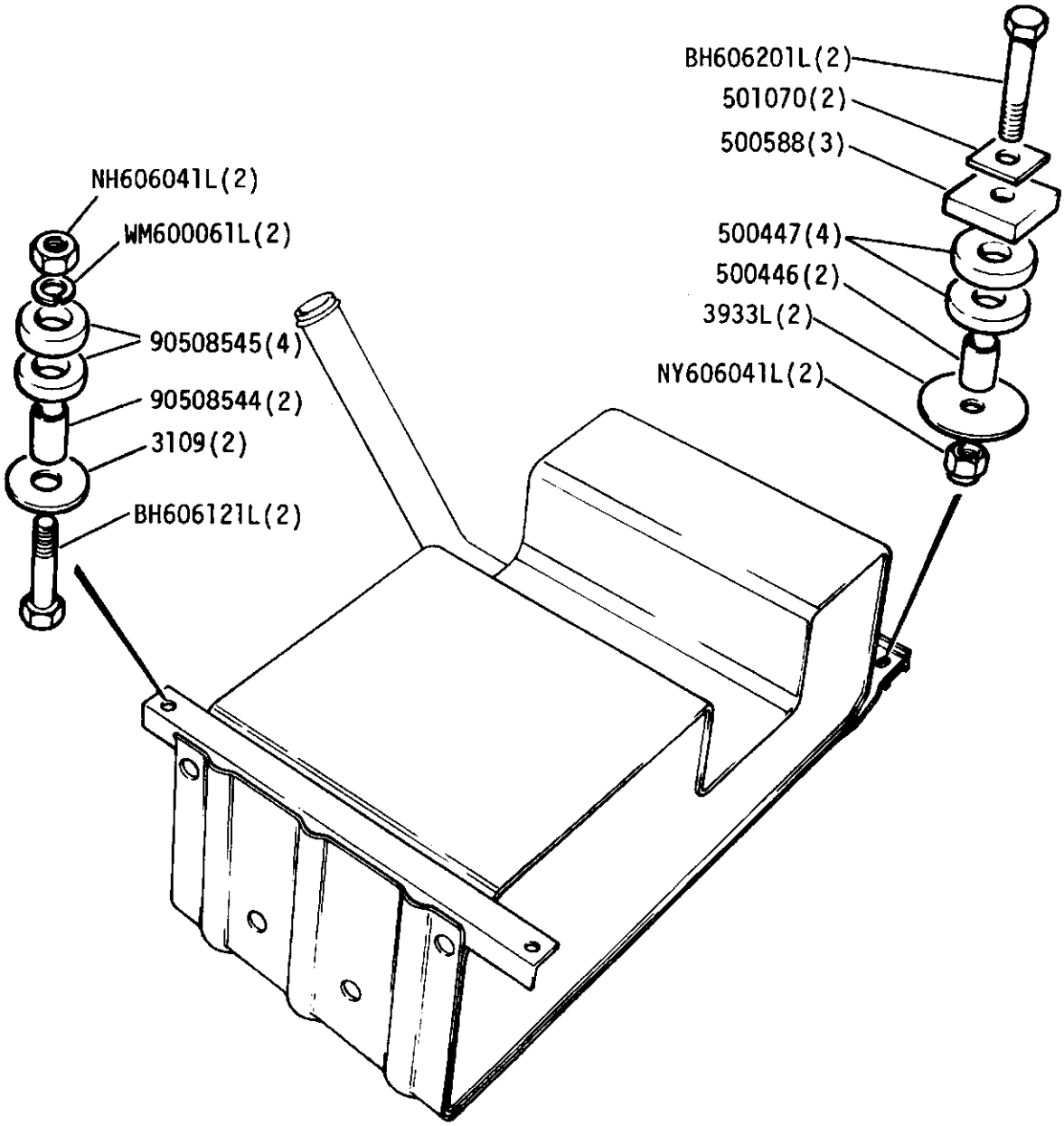

GROUP H

FUEL SYSTEM - Fuel Tank Mountings - All 2.6 Litre Petrol models from Vehicle suffix 'C' onwards

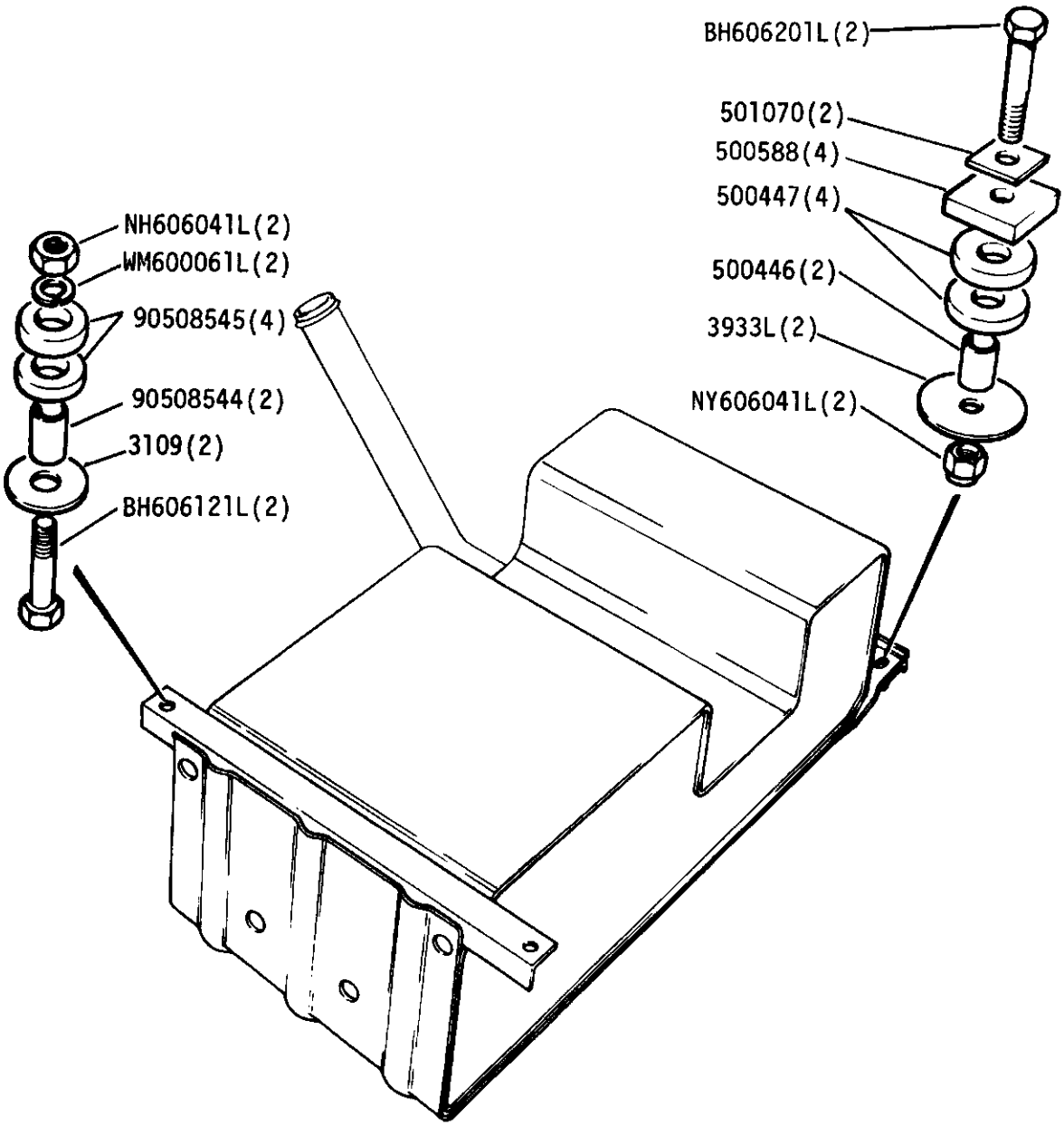

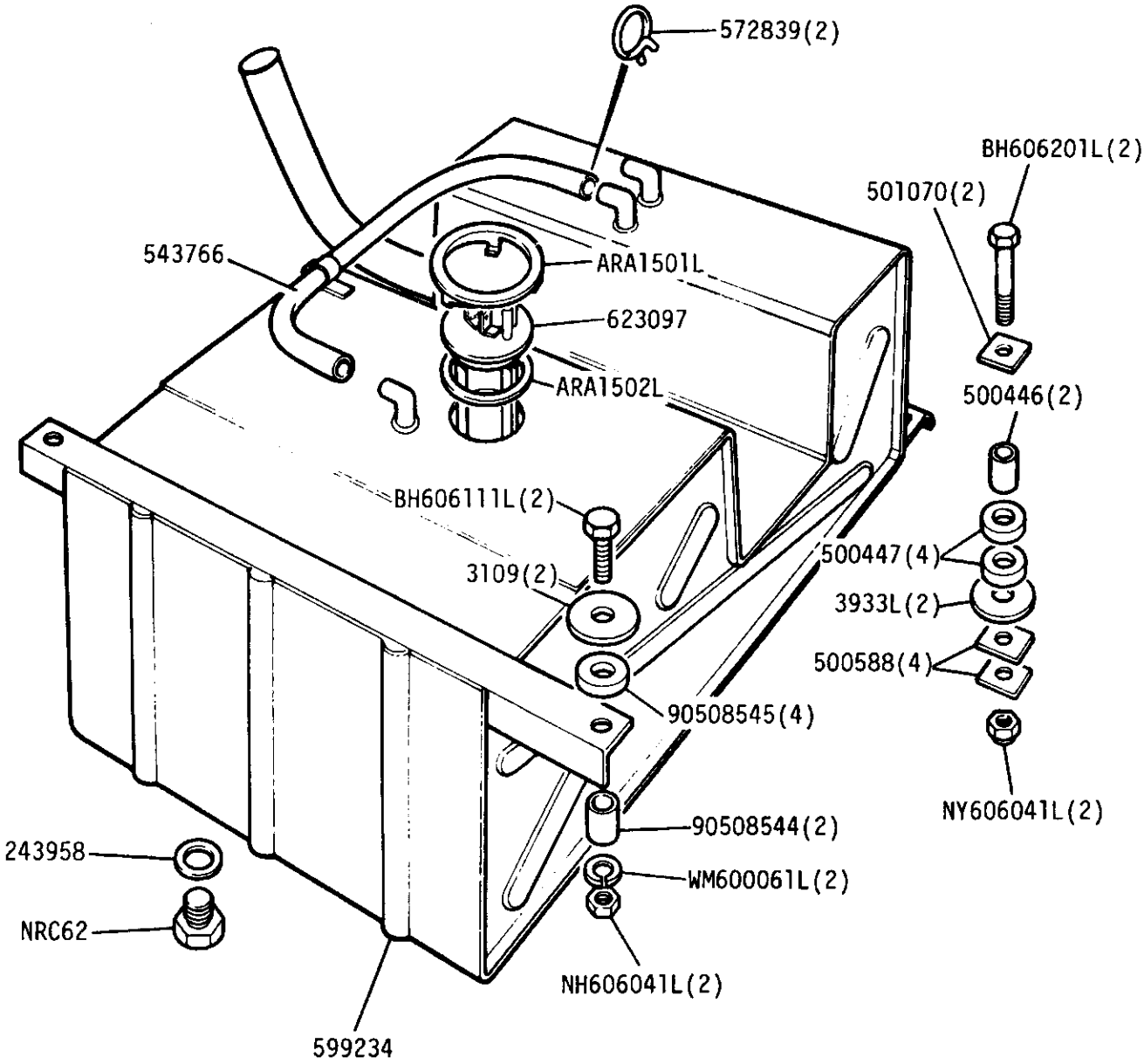
572839(2)
BH606201L(2)
501070(2)
543766
ARA1501L
623097
ARA1502L
500446(2)
BH606111L(2)
500447(4)
3109(2)
3933L(2)
500588(4)
90508545(4)
NY606041L(2)
90508544(2)
243958
WM600061L(2)
NRC62
NH606041L(2)
599234

GROUP H

ACCELERATOR - Pedal and Shaft - 2¼ Litre Petrol

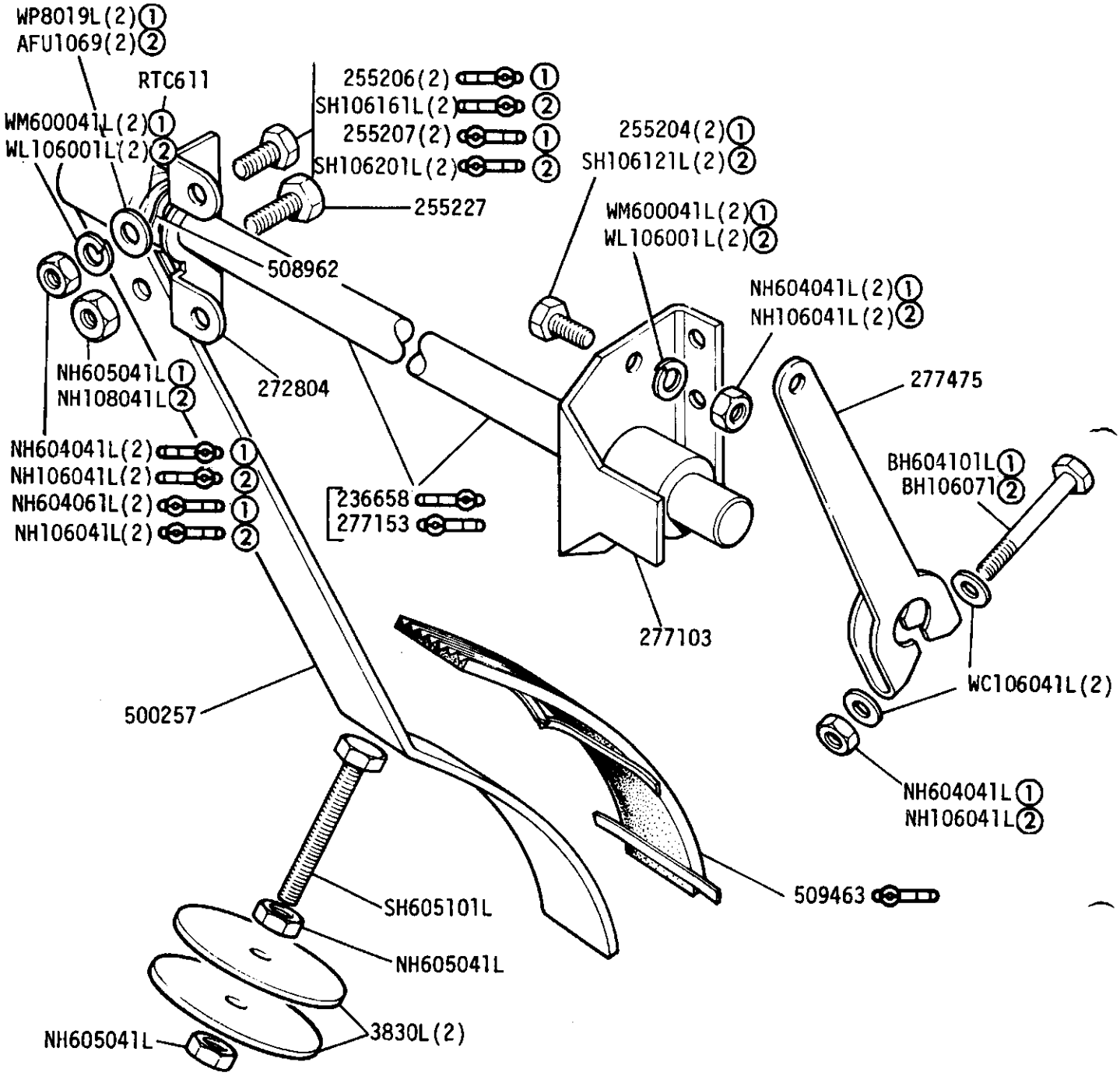

① UNF
② METRIC

GROUP H
ACCELERATER - Cross Shaft 2¼ Litre Petrol

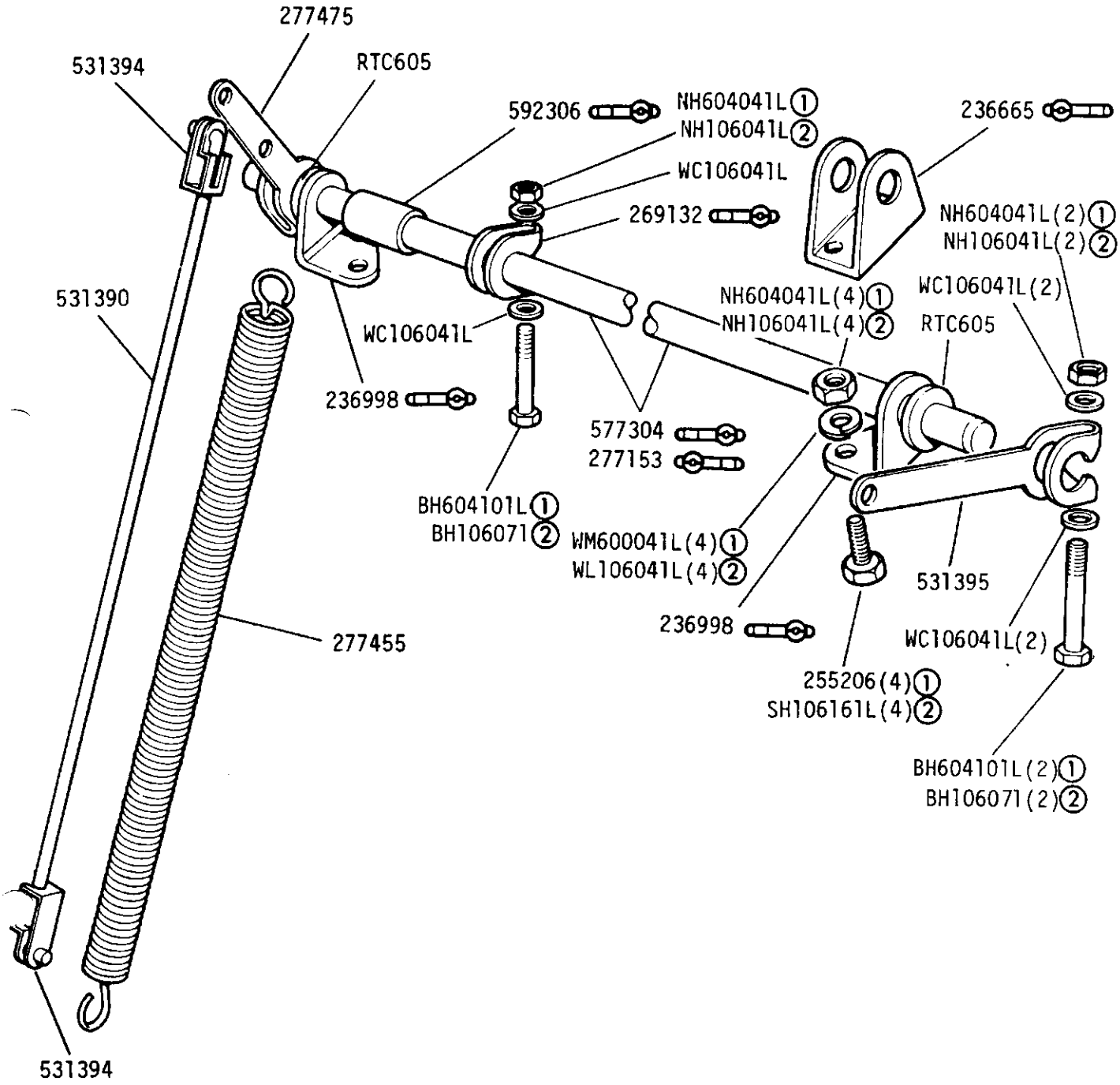

① UNF
② METRIC

GROUP H

ACCELERATOR - Bell Crank and Control Rod 2¼ Litre Petrol

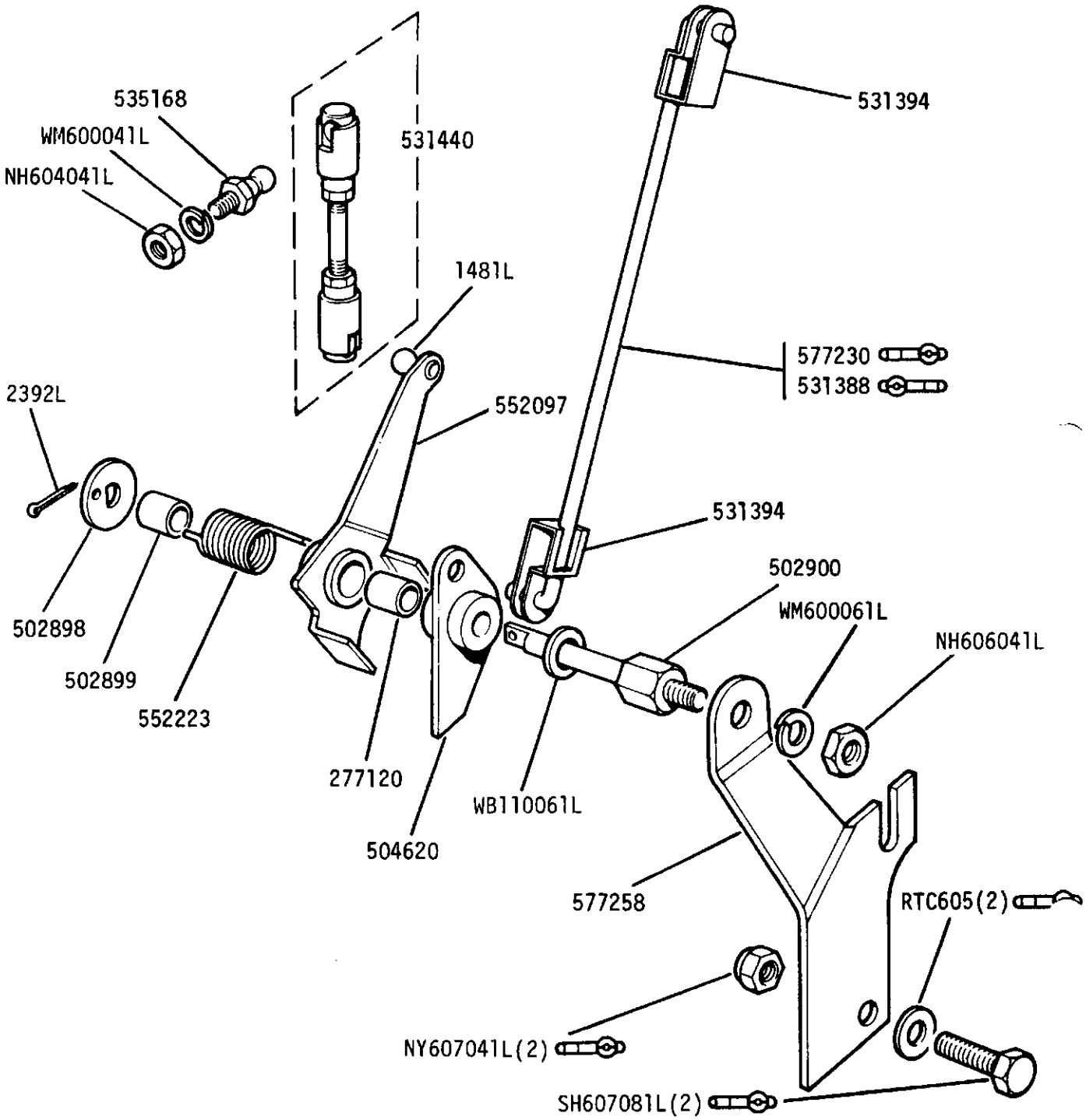

GROUP H
ACCELERATOR - Pedal and Shaft - 2.6 Litre Petrol

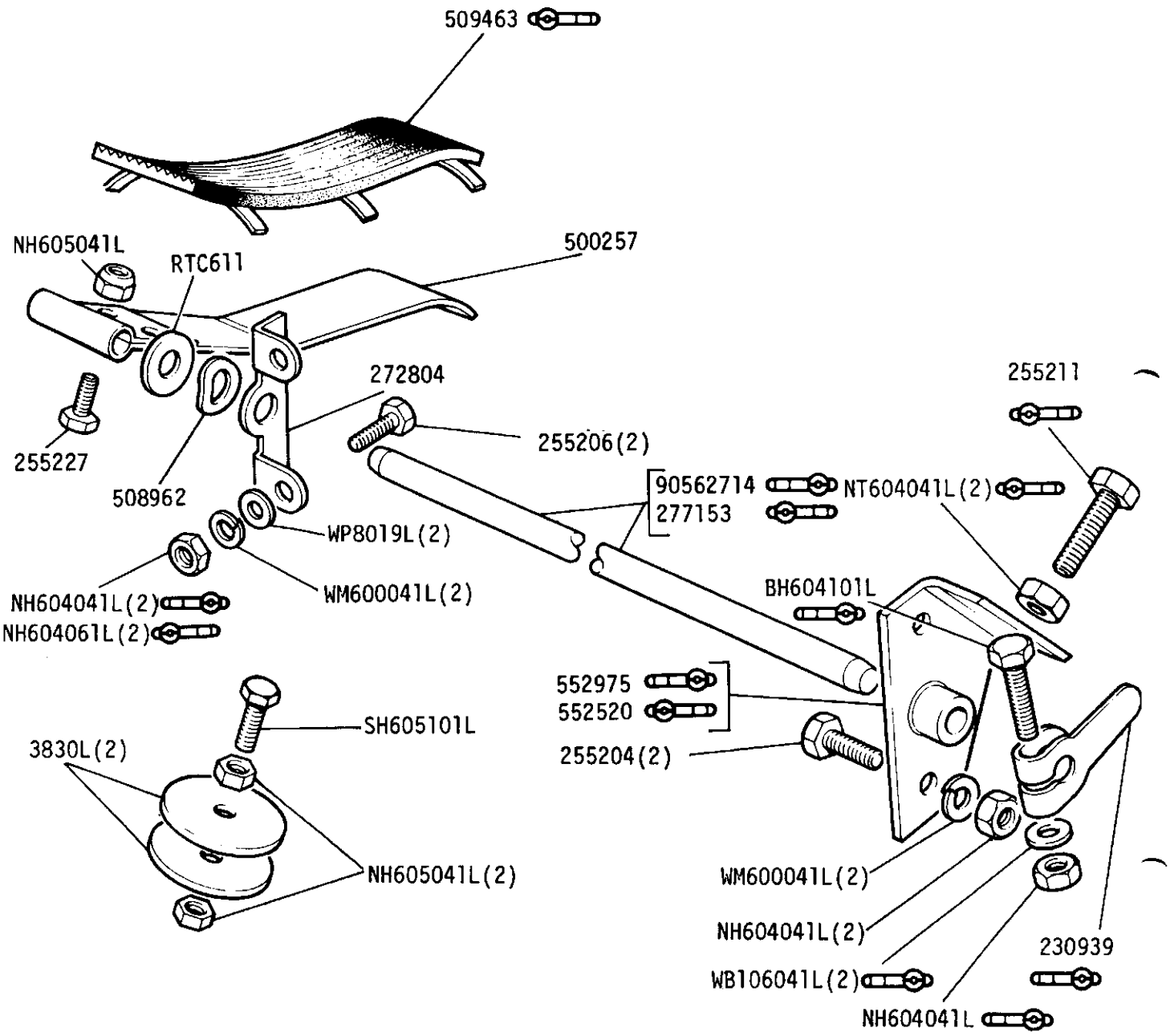

GROUP H

ACCELERATOR - Cross Shaft and Lever 2.6 Litre Petrol

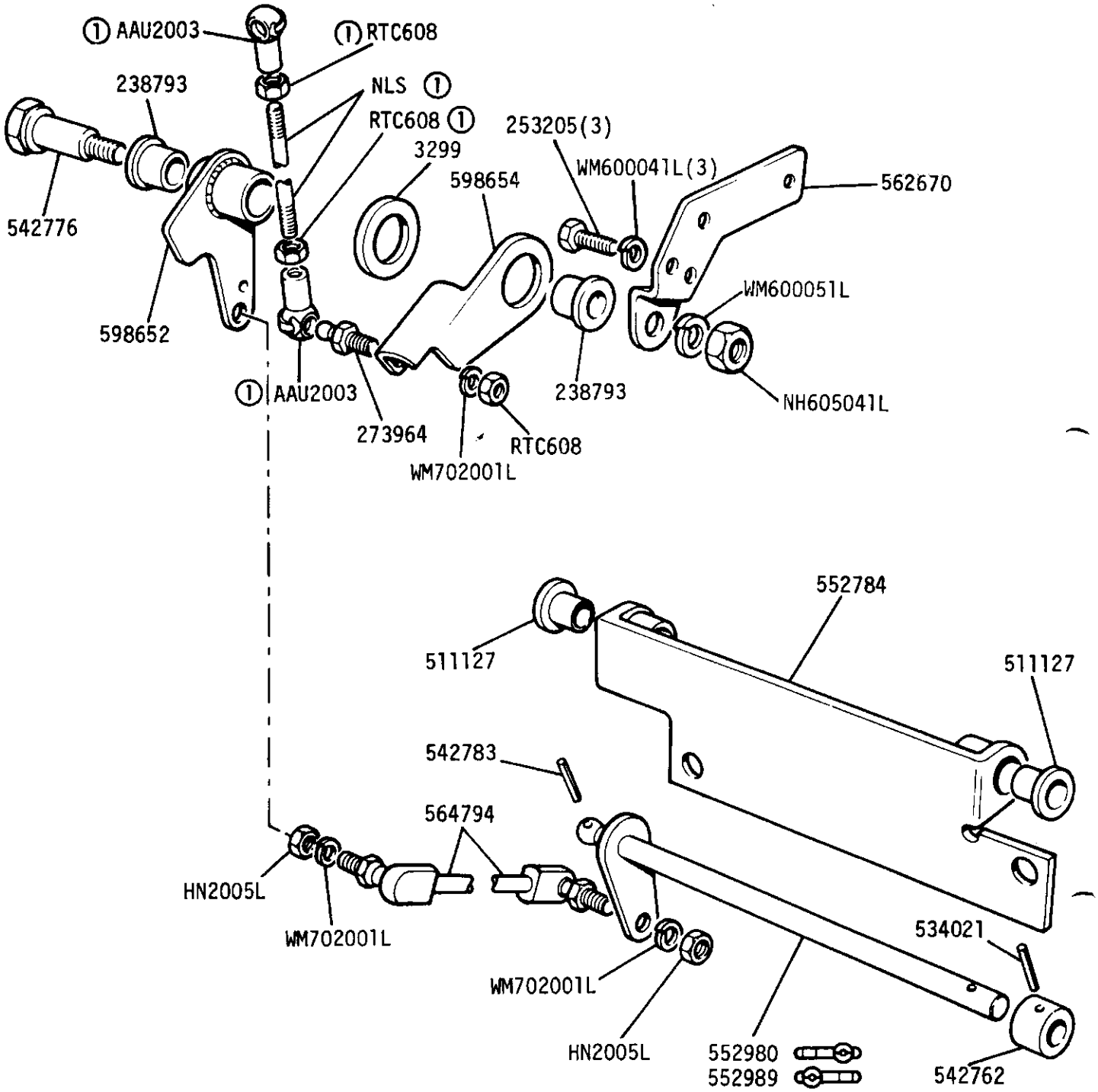

① CONTROL ROD ASSEMBLY 531440

GROUP H

ACCELERATOR - Extension Shaft and Lever 2.6 Litre Petrol

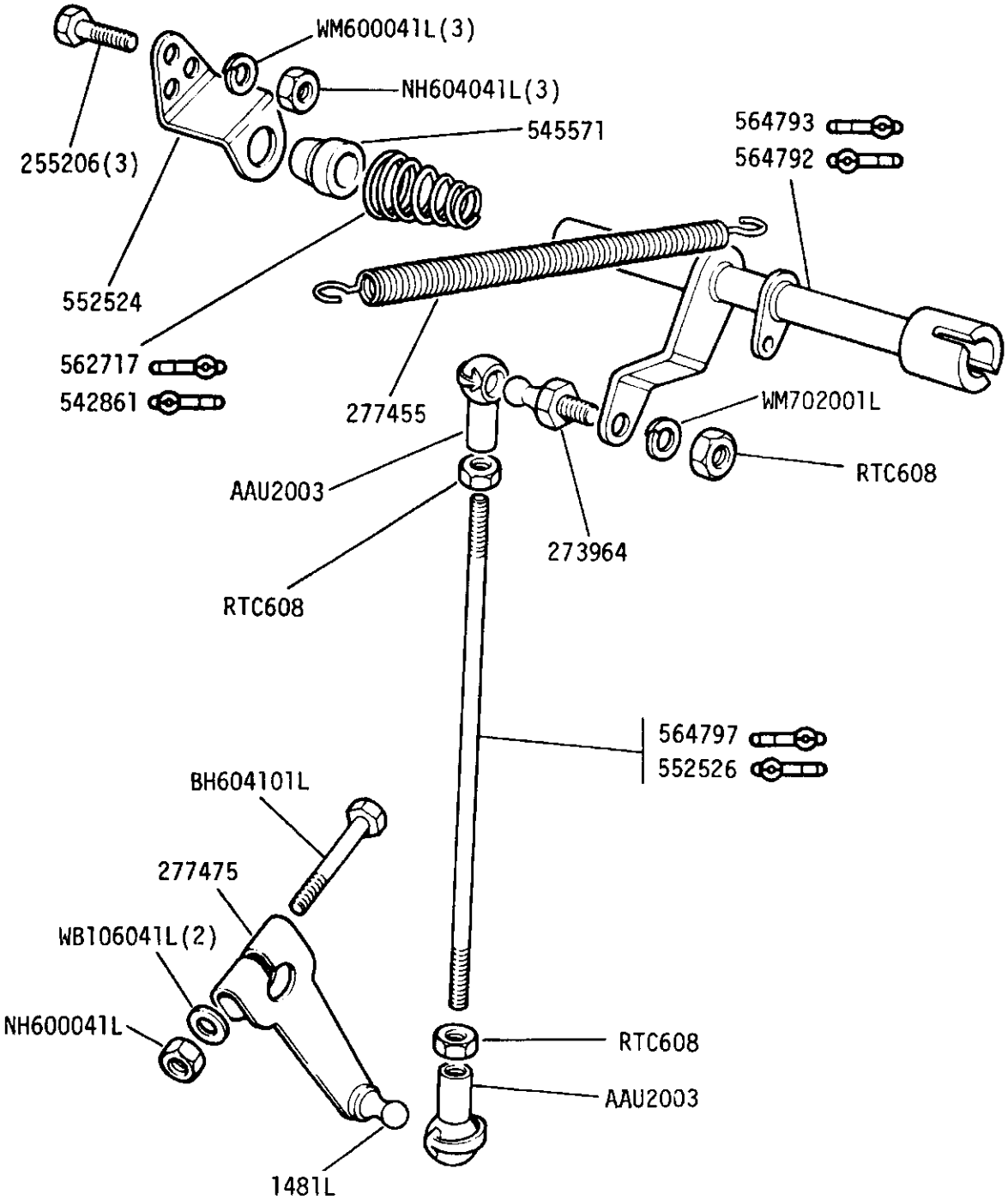

GROUP H
ACCELERATOR - Pedal and Shaft 2¼ Litre Diesel

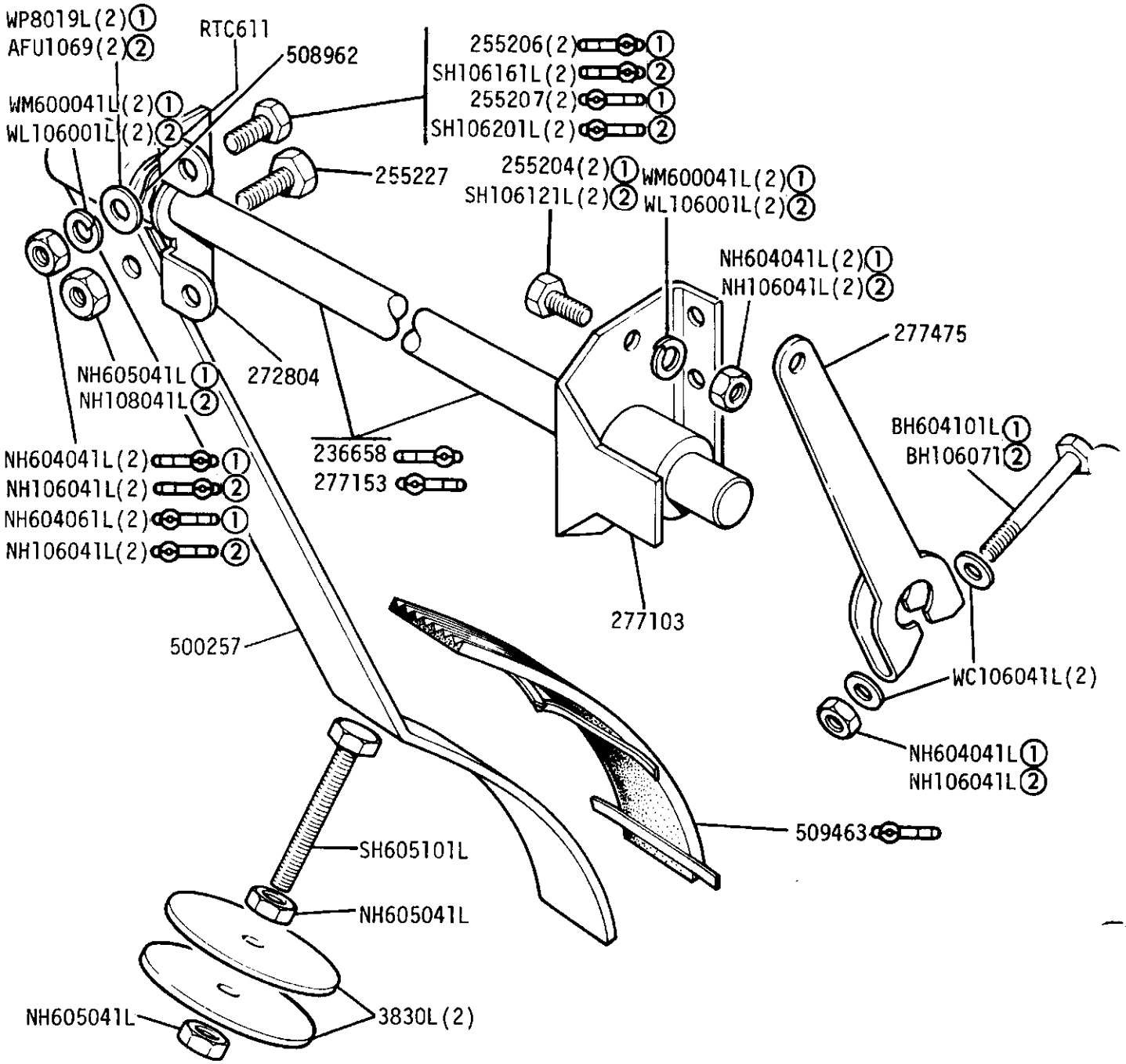

① UNF
② METRIC

GROUP H

ACCELERATOR - Cross Shaft - 2¼ Litre Diesel

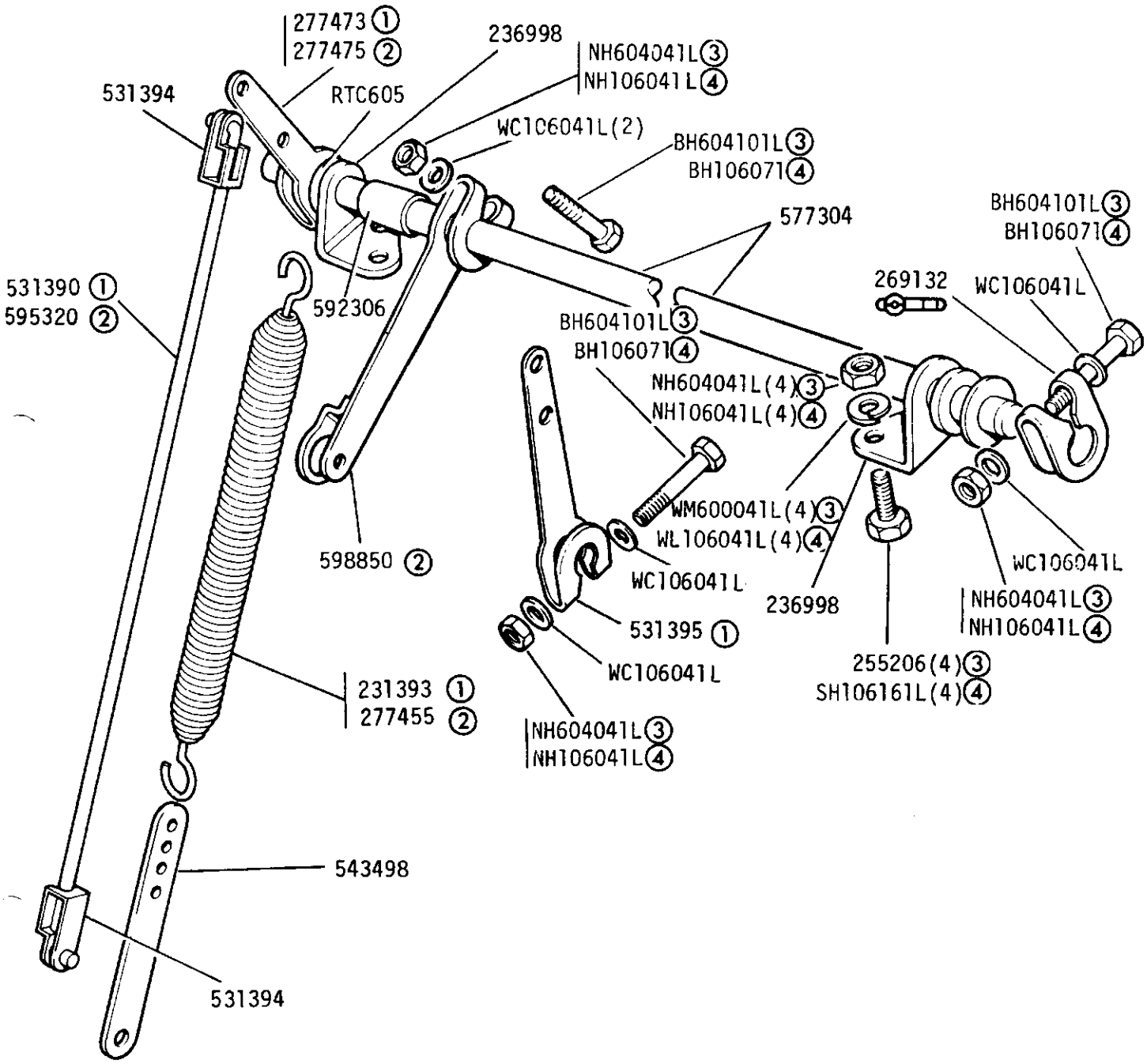

① Rod operated throttle
② Cable operated throttle
③ UNF
④ METRIC

GROUP H
ACCELERATOR - Rod Operated Controls 2¼ Litre Diesel

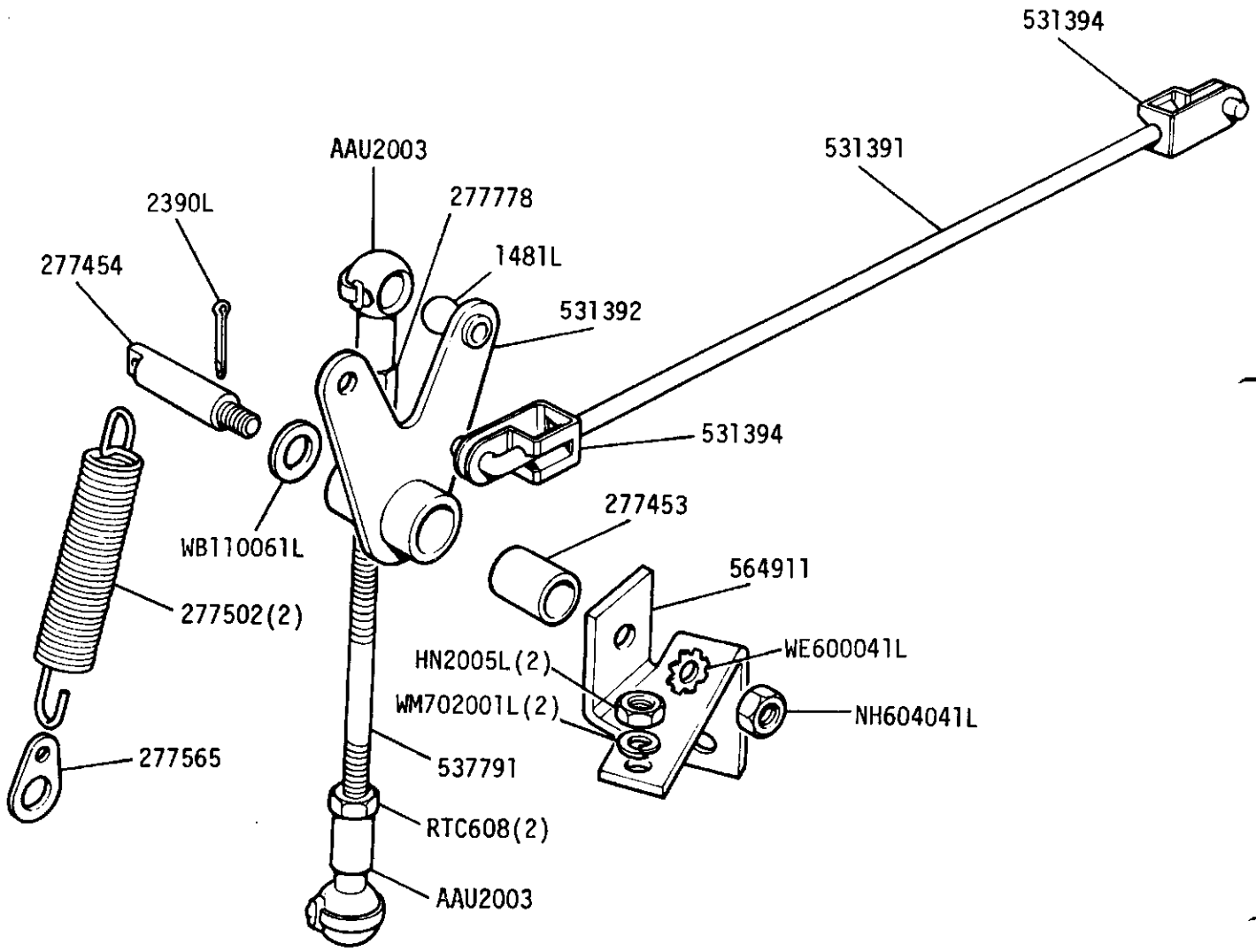

Rod Operated, alternative to Cable operated on adjacent frame

GROUP H
ACCELERATOR - Cable Operated Controls 2¼ Litre Diesel

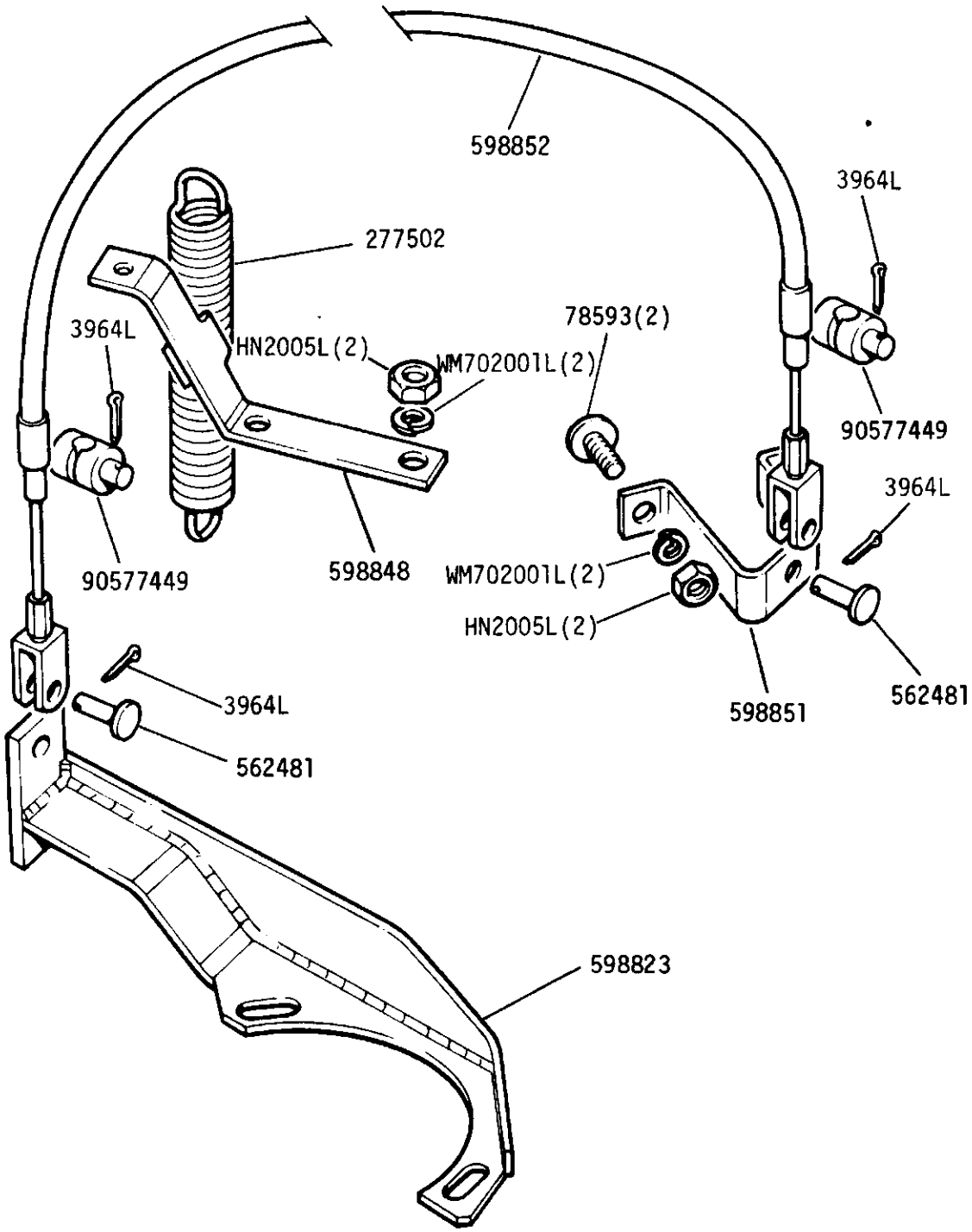

Cable Operated, alternative to Rod operated on adjacent frame

GROUP H
ACCELERATOR - Pedal and shaft, 109V8

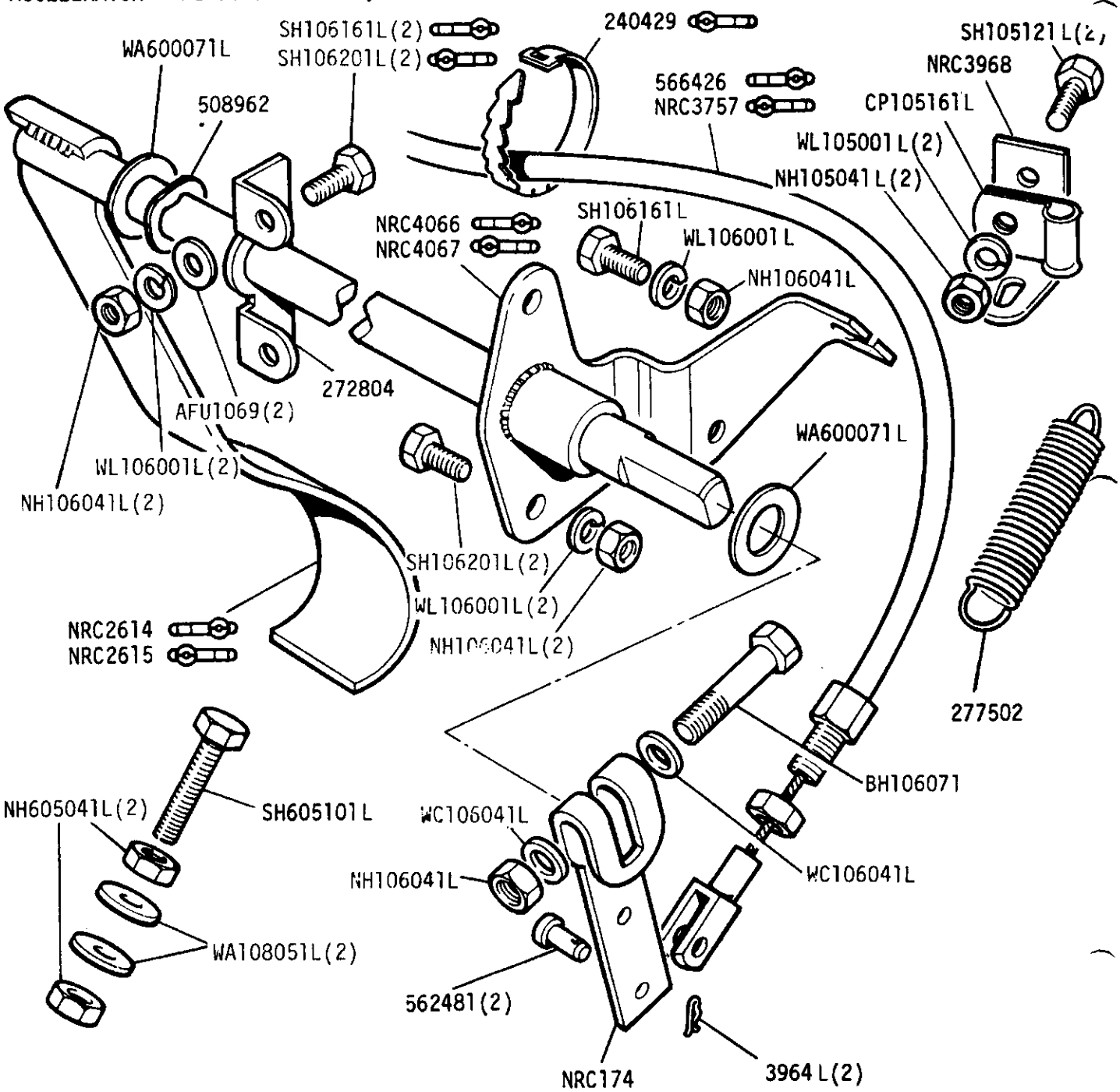

GROUP H

ACCELERATOR - Engine Speed Hand Control 2¼ Litre Diesel

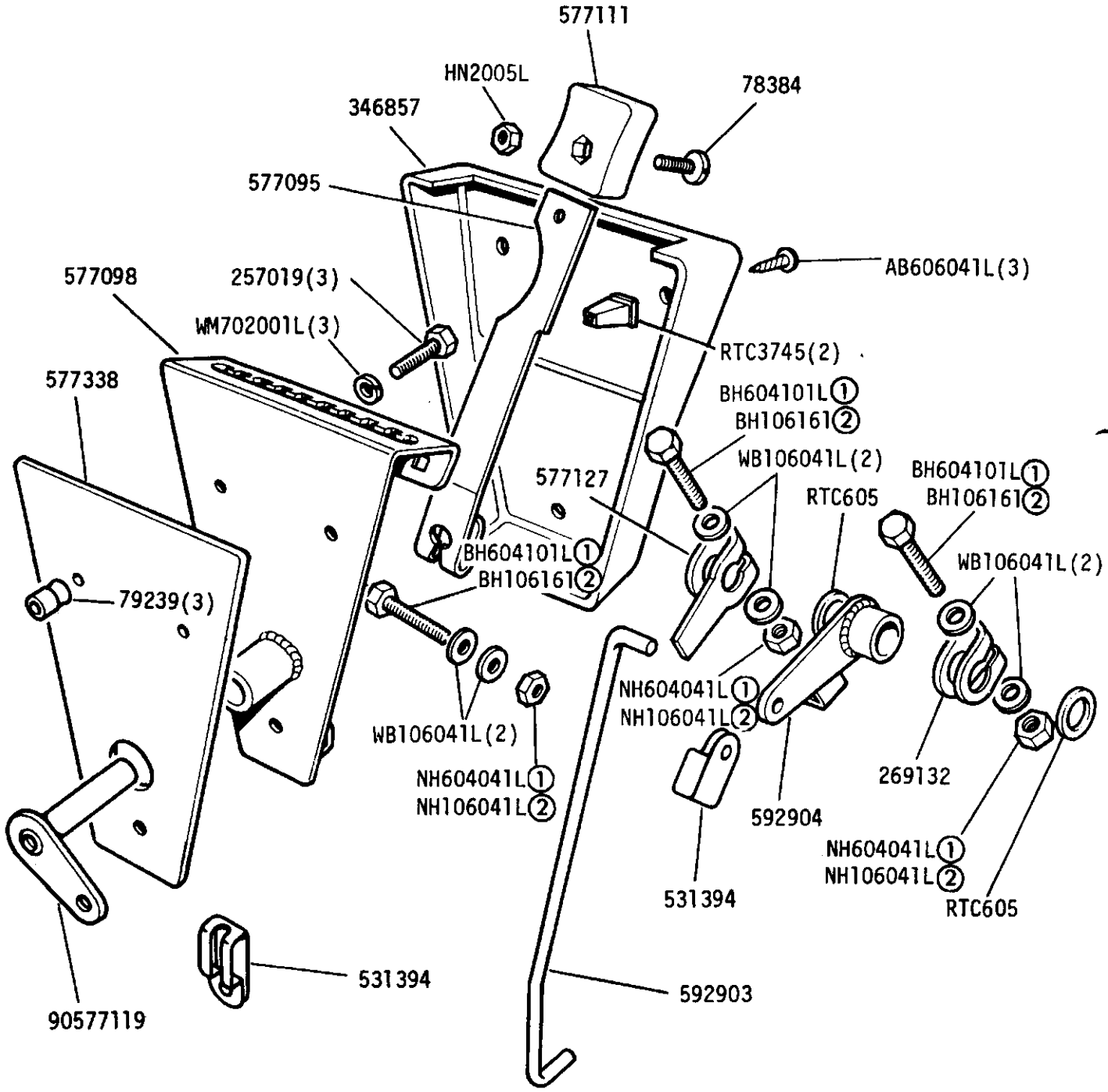

① UNF
② METRIC

GROUP H
ELECTRICAL - Cold Start and Engine Stop Controls

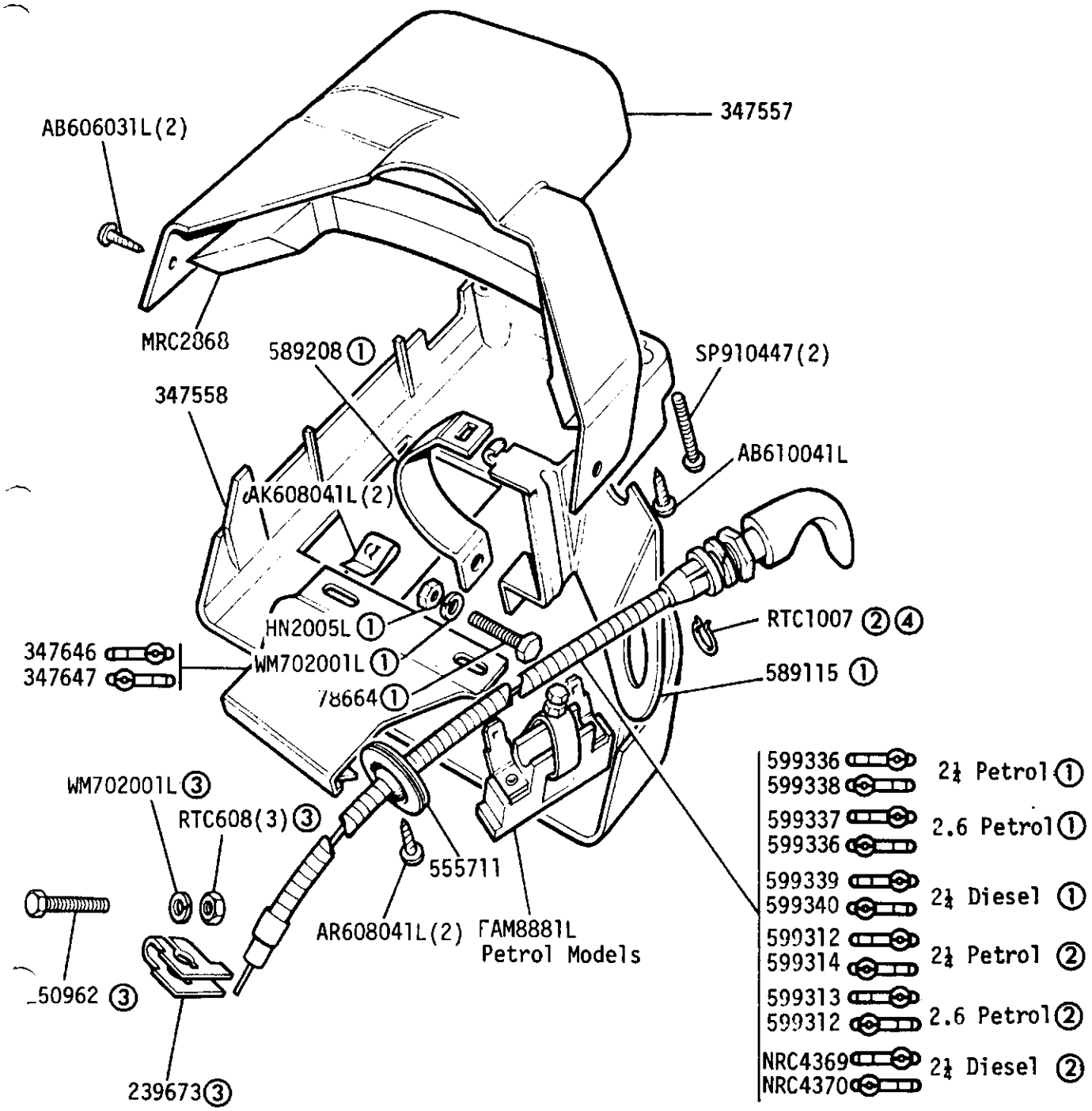

① Models without steering column locks
② Models with steering column locks
③ 2¼ litre Diesel
④ Petrol models

Choke control NRC5069 RH Stg 109 V8

Choke control NRC5070 LH Stg 109 V8

GROUP H
HEAT SHIELD - 2¼ Litre Petrol

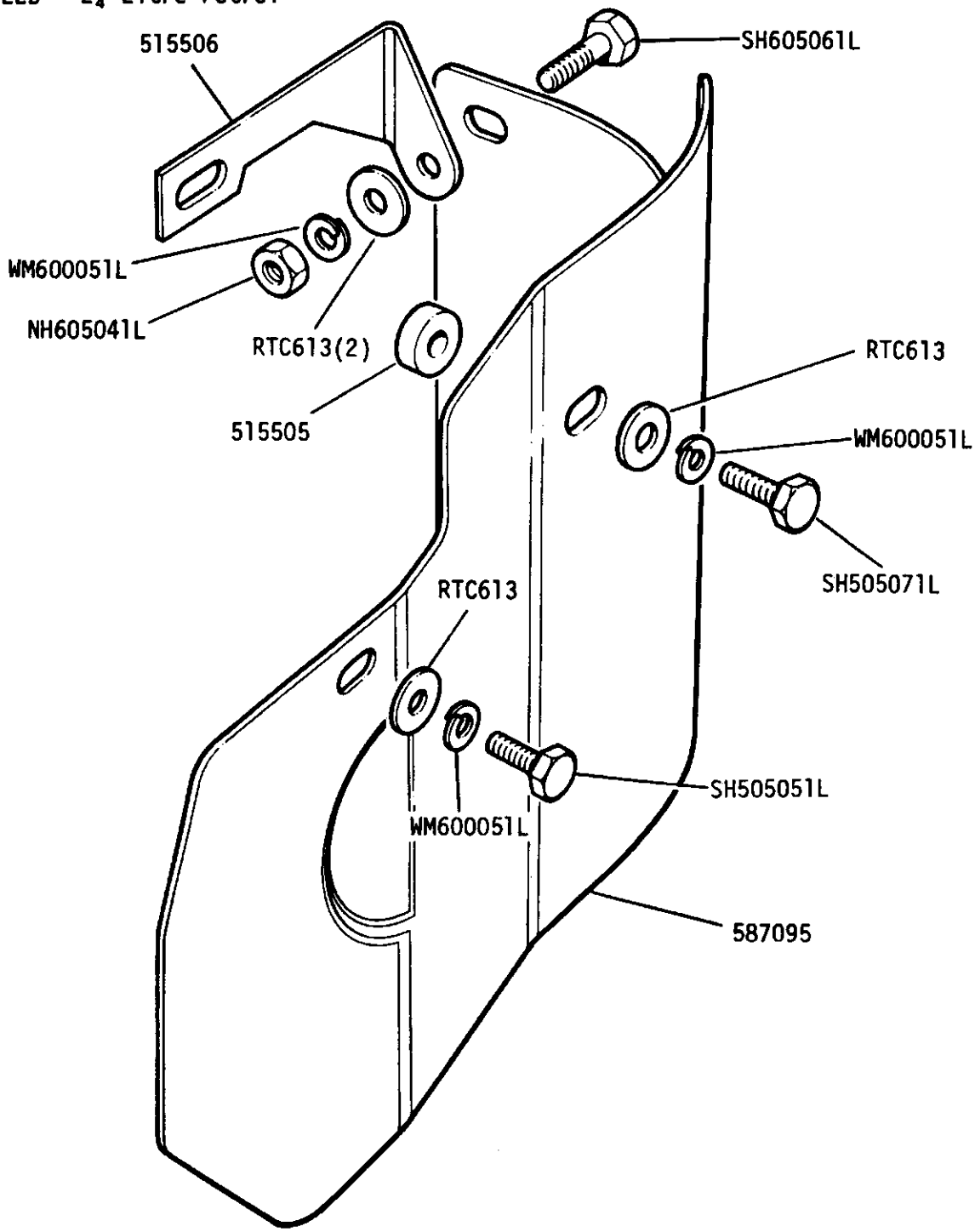

GROUP H
EXHAUST SYSTEM - Front Exhaust Pipe 2¼ Litre Petrol and Diesel

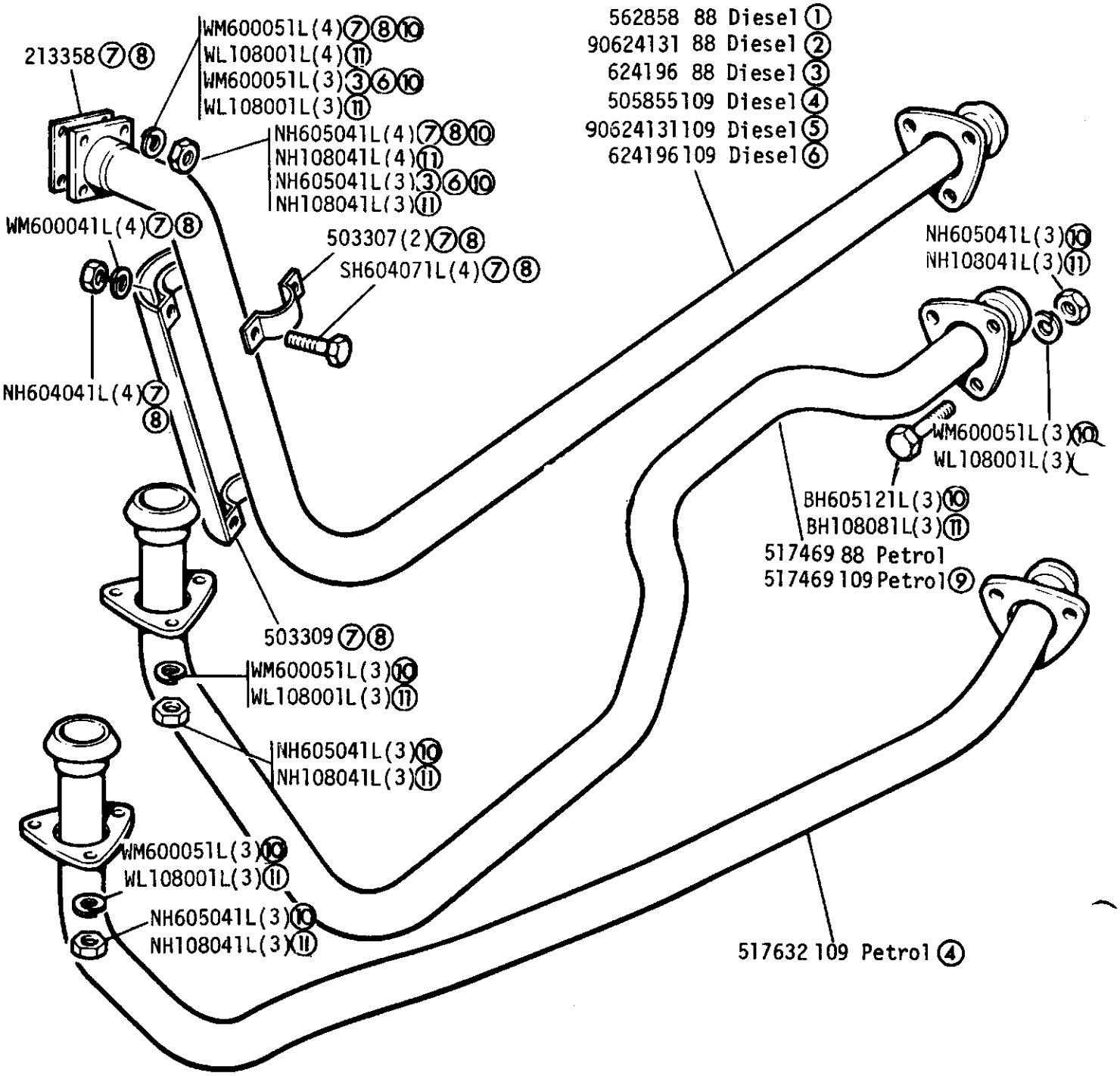

① Vehicle suffix 'A' up to September 1973
② Vehicle suffix 'A' from October 1973 to July 1974
③ From vehicle suffix 'B' onwards
④ Up to vehicle suffix 'B' inclusive
⑤ Vehicle suffix 'C' only
⑥ From vehicle suffix 'D' onwards
⑦ 88" Diesel vehicle suffix 'A'
⑧ 109" Diesel up to vehicle suffix 'C' inclusive
⑨ 109 Petrol from vehicle suffix 'C' onwards
⑩ UNF
⑪ METRIC

GROUP H
EXHAUST SYSTEM - Intermediate Exhaust Pipe 88in

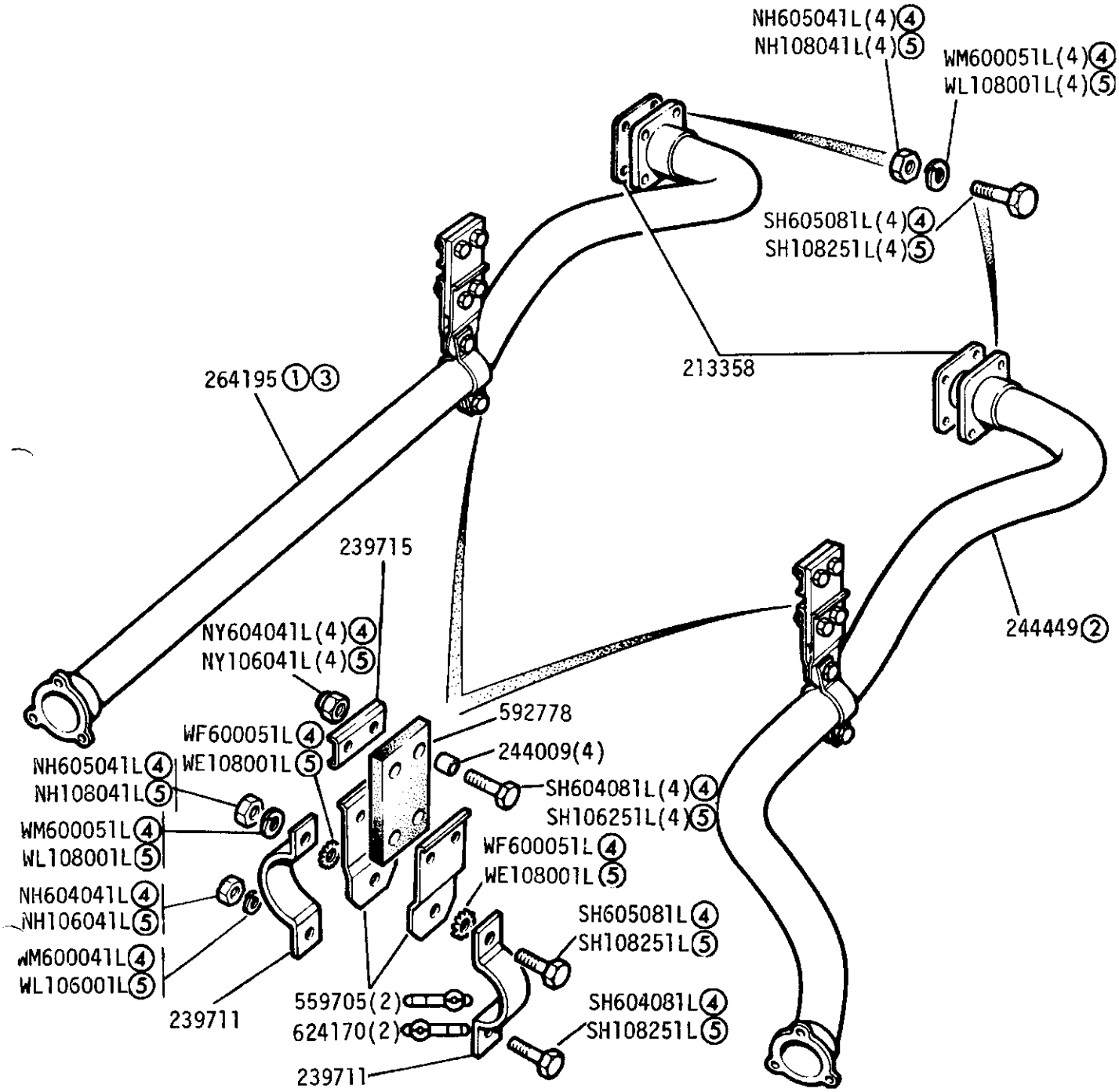

①Petrol models
②Diesel models up to September 1973
③Diesel models from October 1973 onwards
④UNF
⑤METRIC

GROUP H

EXHAUST SYSTEM - Intermediate Exhaust Pipe 109in 4 cyl - Except Station Wagon up to Vehicle suffix 'B' inclusive

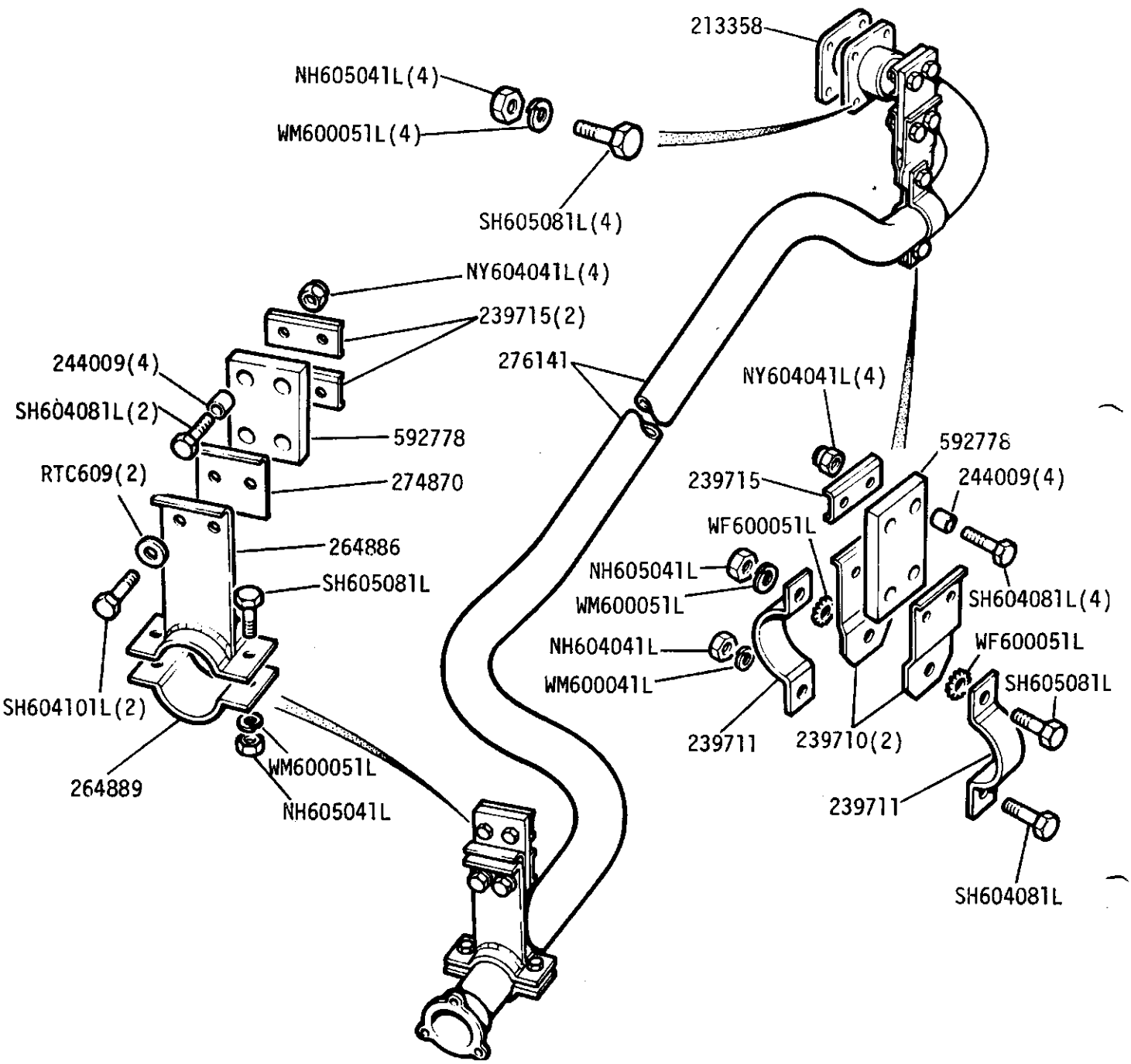

GROUP H
EXHAUST SYSTEM - Intermediate Exhaust Pipe 109in 4 cyl Station Wagon up to Vehicle suffix 'B' inclusive

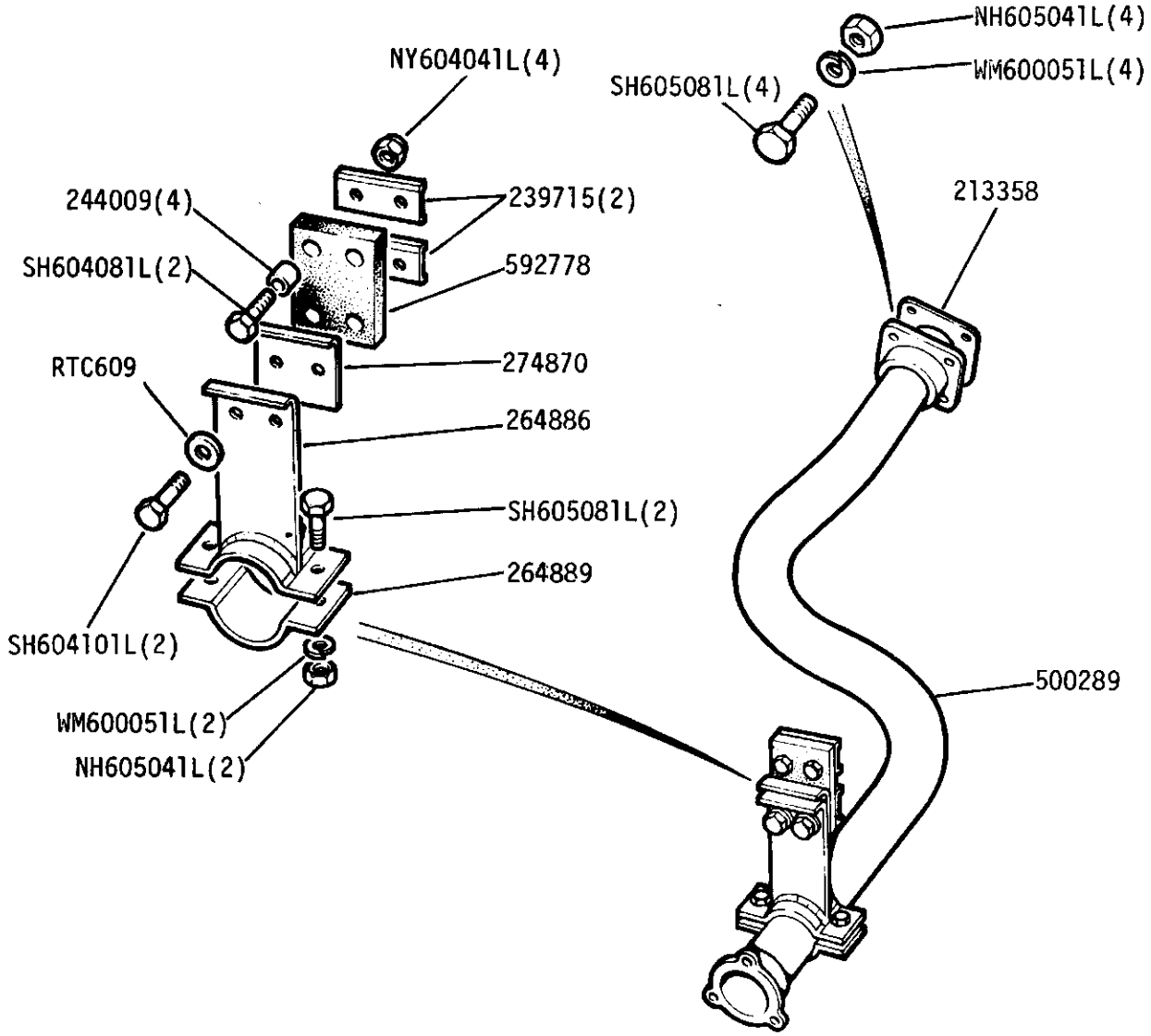

GROUP H
EXHAUST SYSTEM - Intermediate Exhaust Pipe - 109in 4cyl All models from Vehicle suffix 'C' onwards.

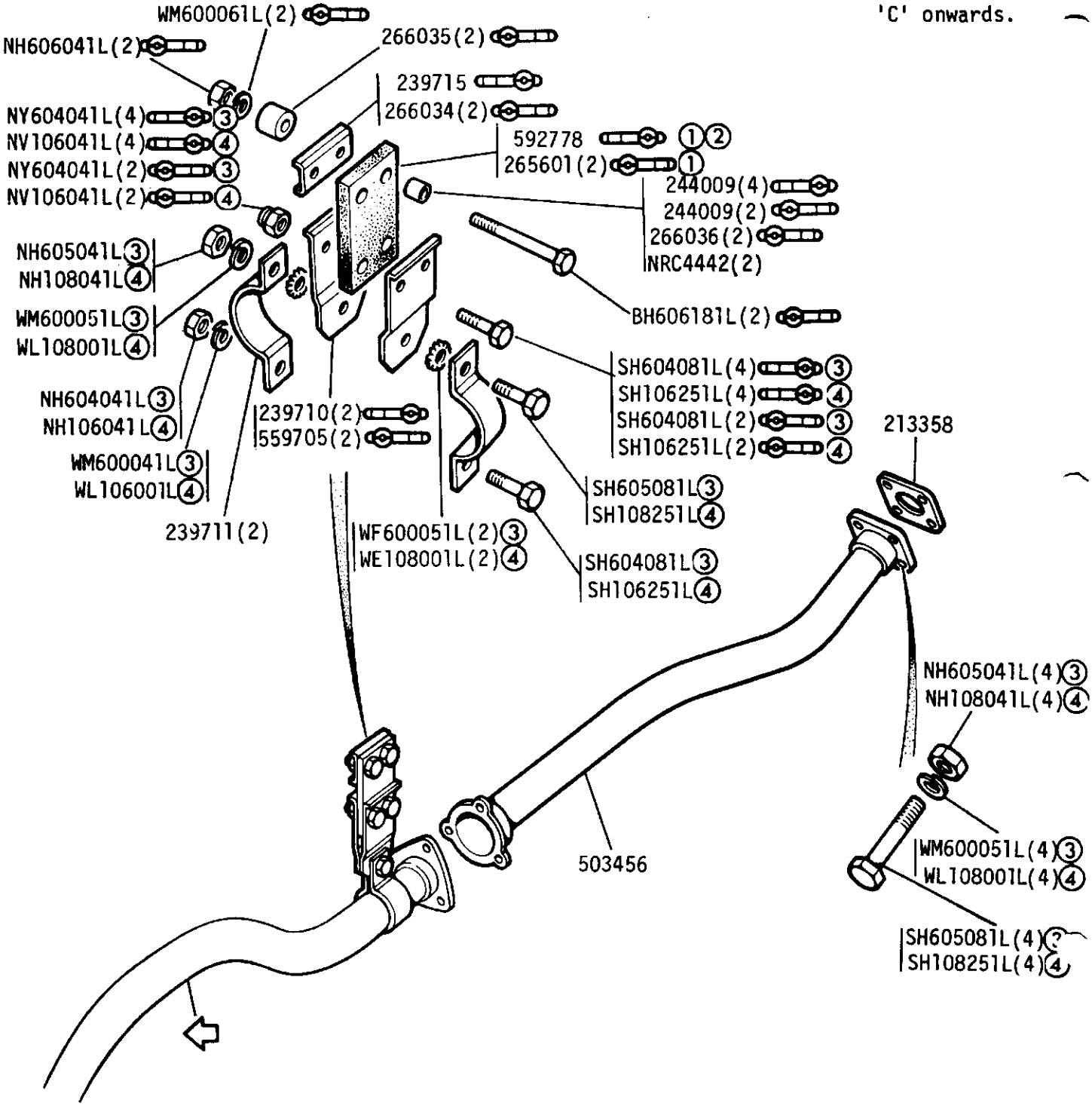

1 Upto March 1981
2 Fitted from April 1981 onwards on RH Stg and LH Stg vehicles
3 UNF
4 METRIC

GROUP H
EXHAUST SYSTEM - Silencer and Tail Pipe 88in

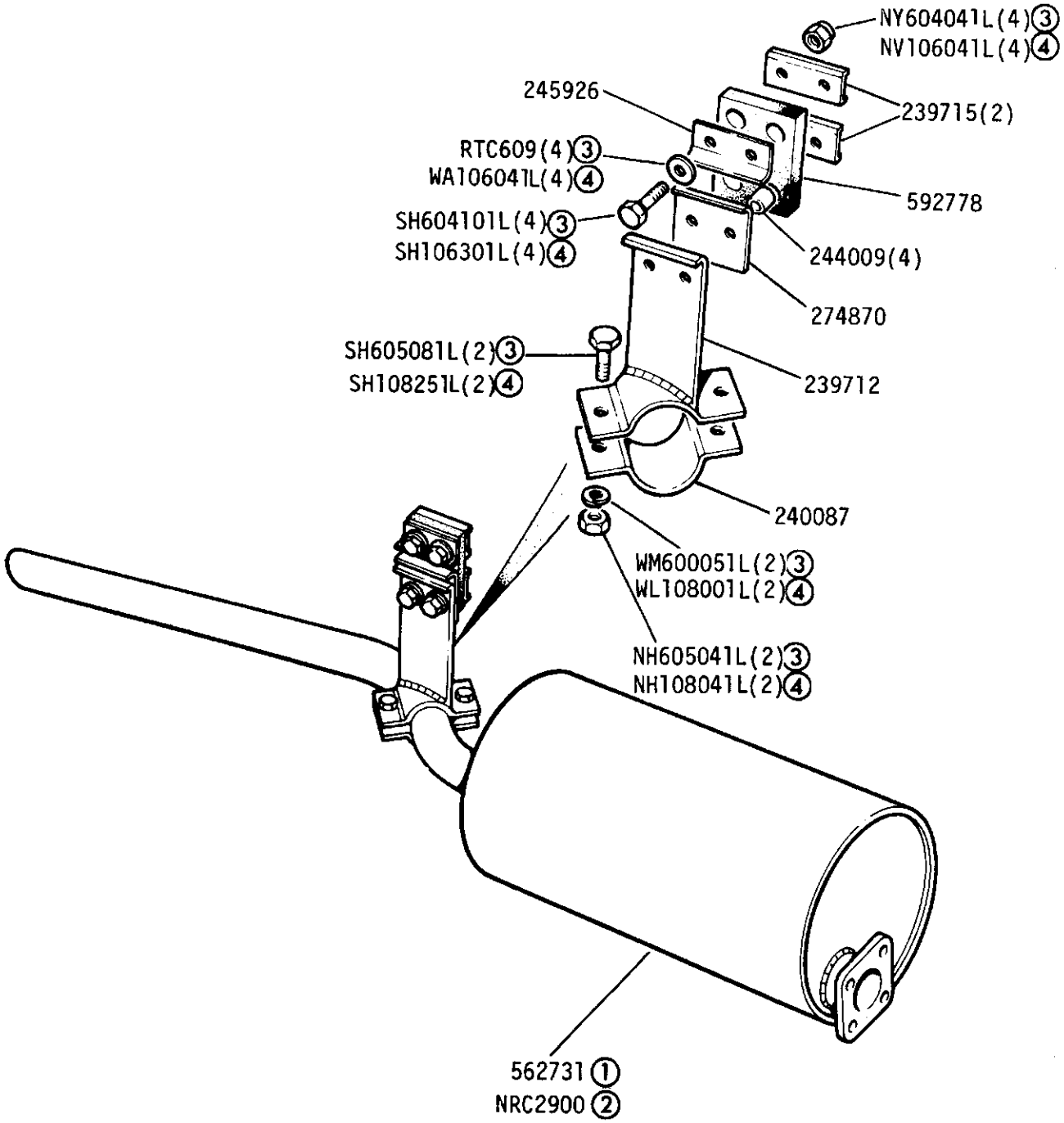

① Up to November 1976
② From December 1976 onwards
③ UNF
④ METRIC

GROUP H
EXHAUST SYSTEM - Silencer and Tail Pipe 88in

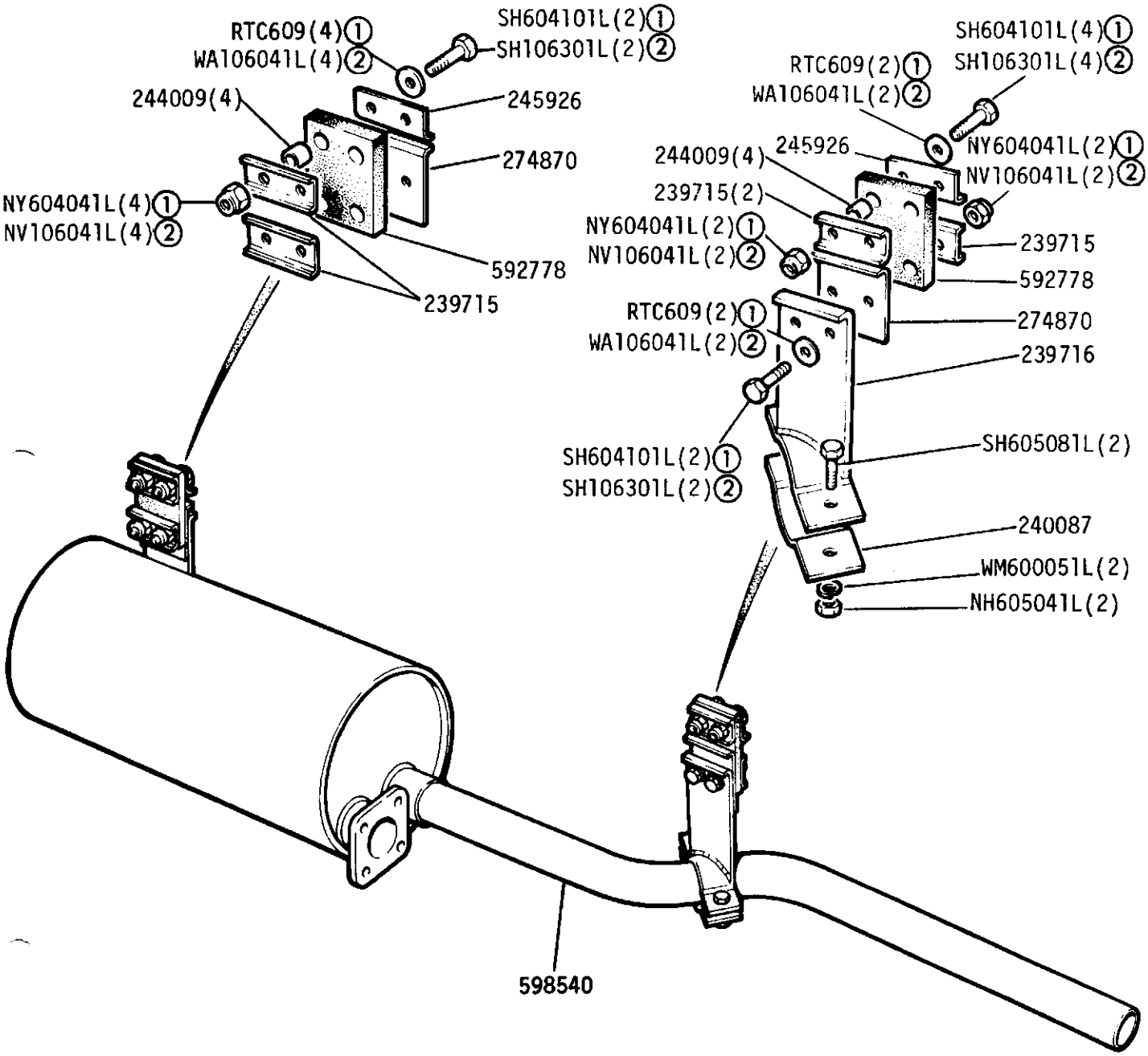

①UNF
②METRIC

GROUP H

EXHAUST SYSTEM - Silencer and Tail Pipe 109in 4cyl - Except Station Wagon up to Vehicle suffix 'B' inclusive

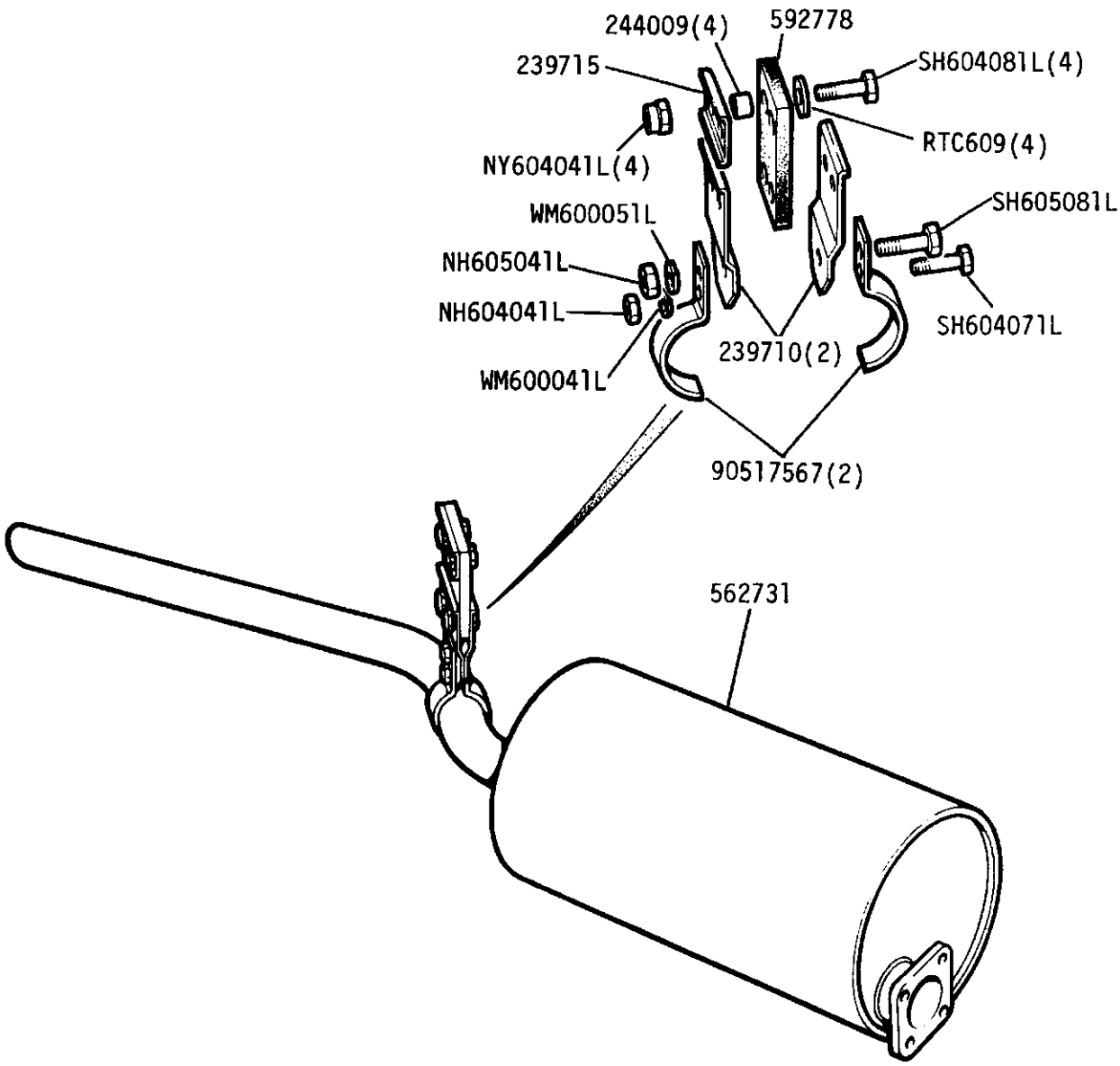

GROUP H

EXHAUST SYSTEM - Silencer and Tail Pipe 109in 4cyl - Except Station Wagon up to Vehicle suffix 'B' inclusive

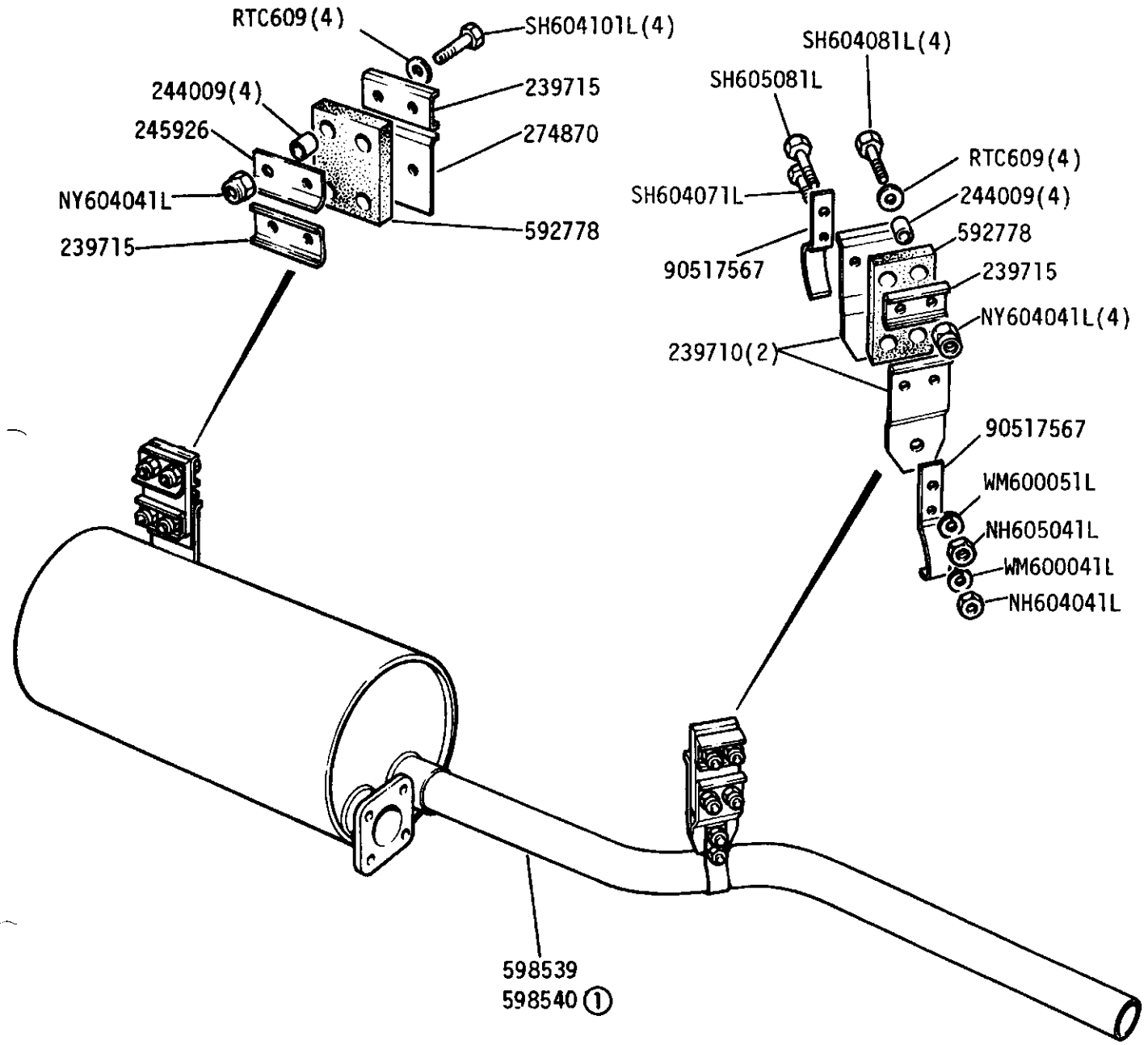

① Angled exhaust silencer for Germany and Switzerland

GROUP H

EXHAUST SYSTEM - Silencer and Tail Pipe 109in 4cyl - Station Wagon up to Vehicle suffix 'B' inclusive

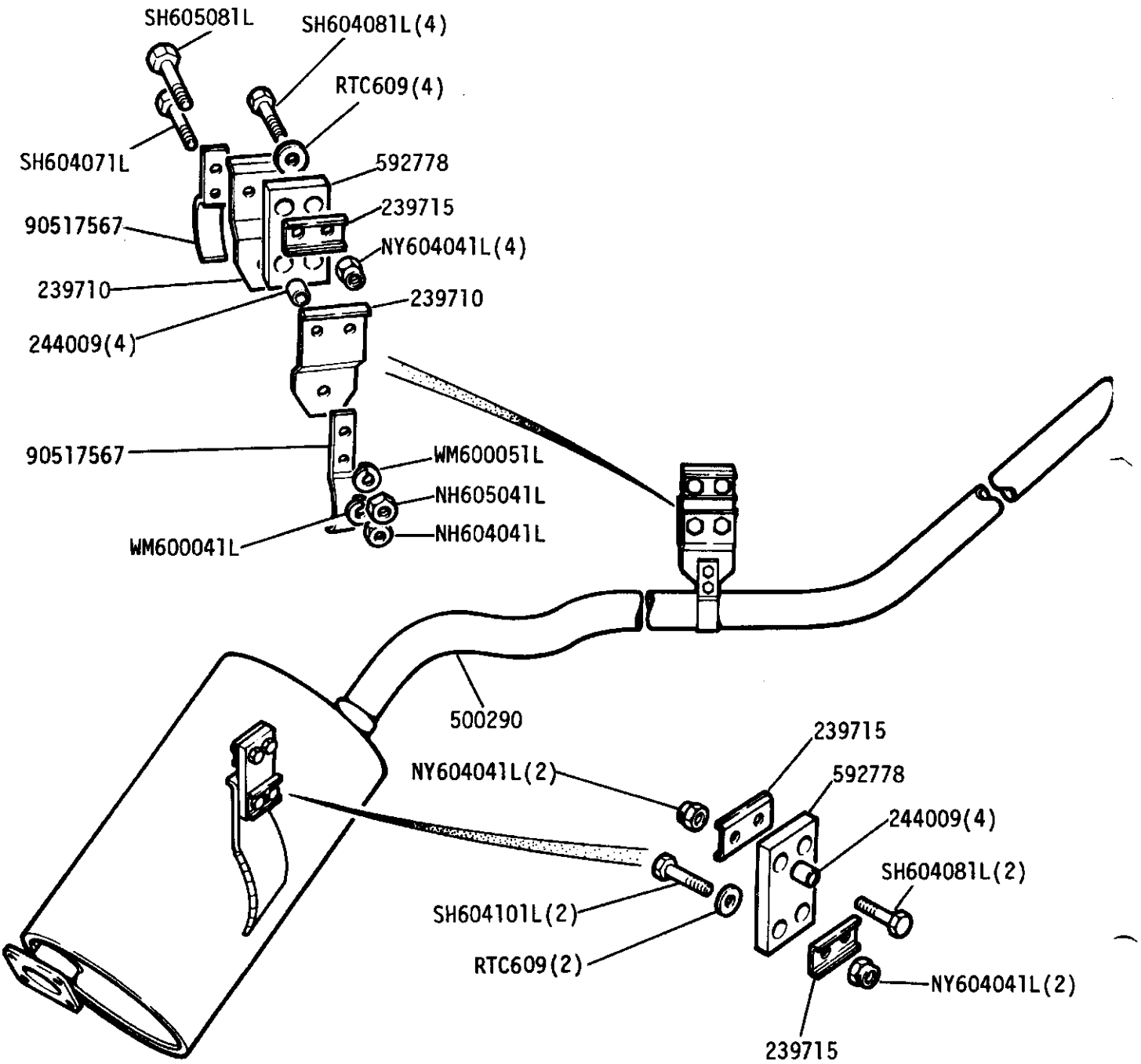

GROUP H

EXHAUST SYSTEM - Silencer and Tail Pipe 109in 4cyl - All models from Vehicle suffix 'C' onwards

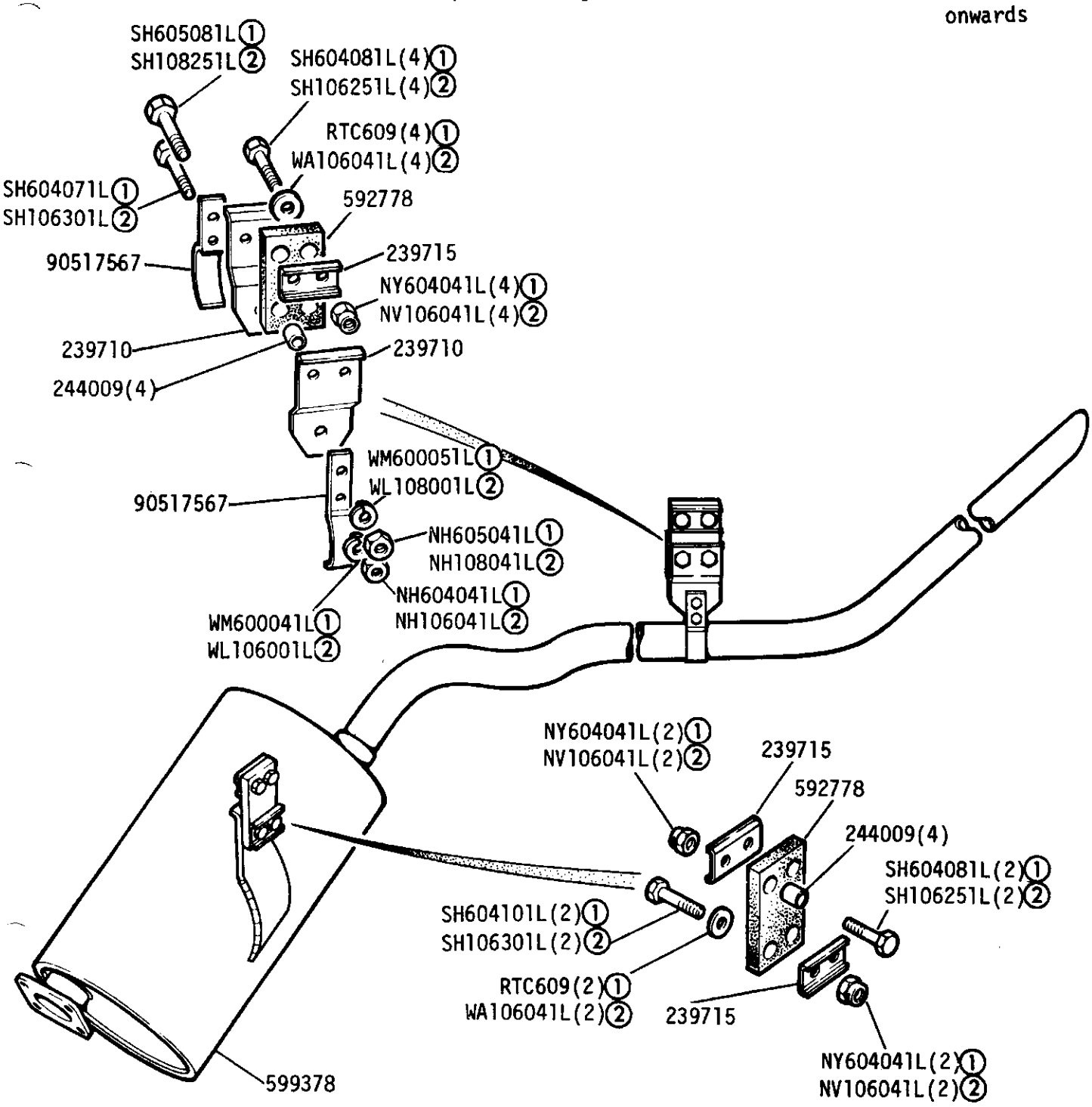

① UNF
② METRIC

GROUP H
EXHAUST SYSTEM - Manifold Heat Shield 2.6 Litre Petrol (Detoxed and Non-Detoxed)

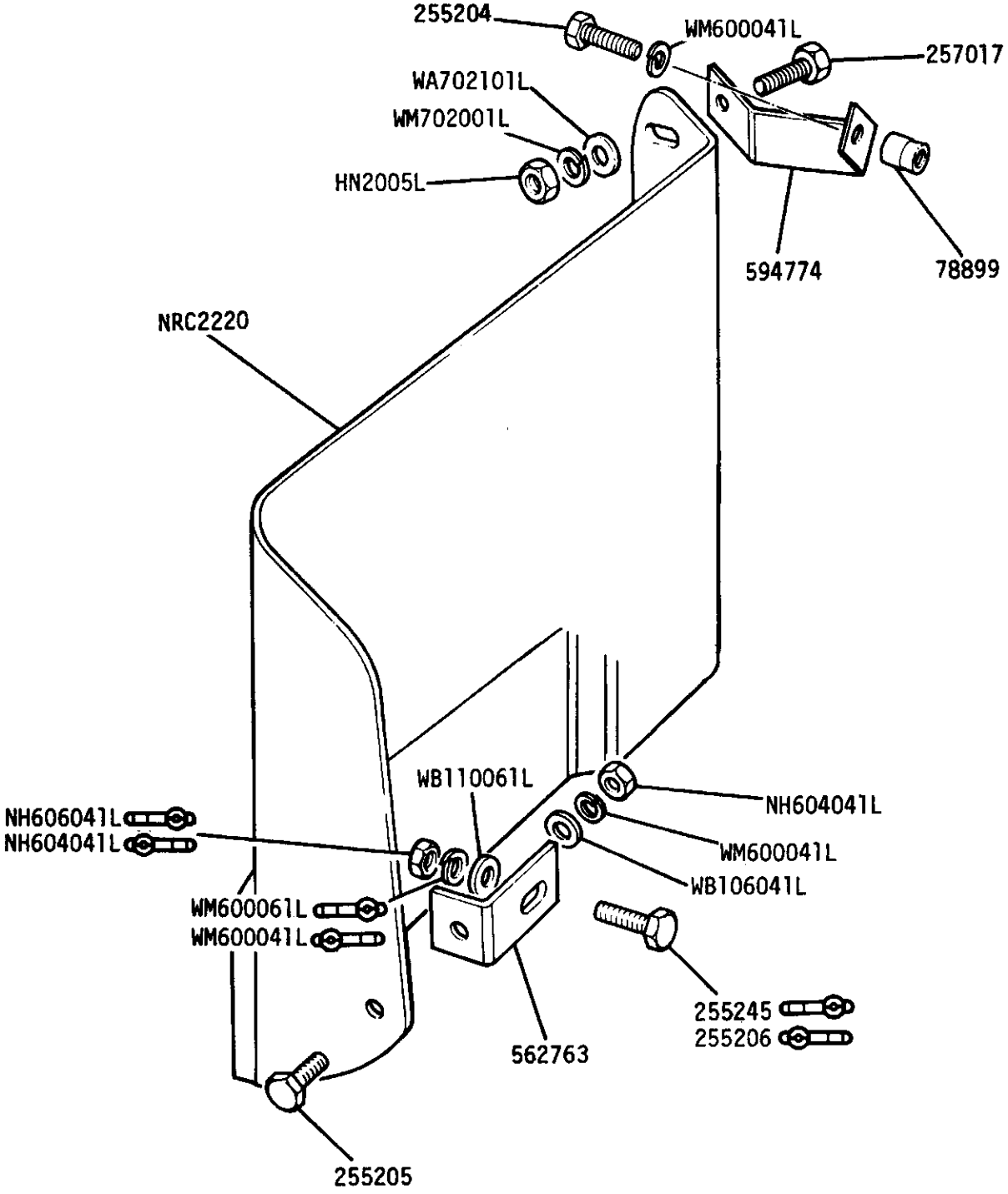

GROUP H

EXHAUST SYSTEM - Front and Intermediate Exhaust Pipe - 2.6 Litre Petrol

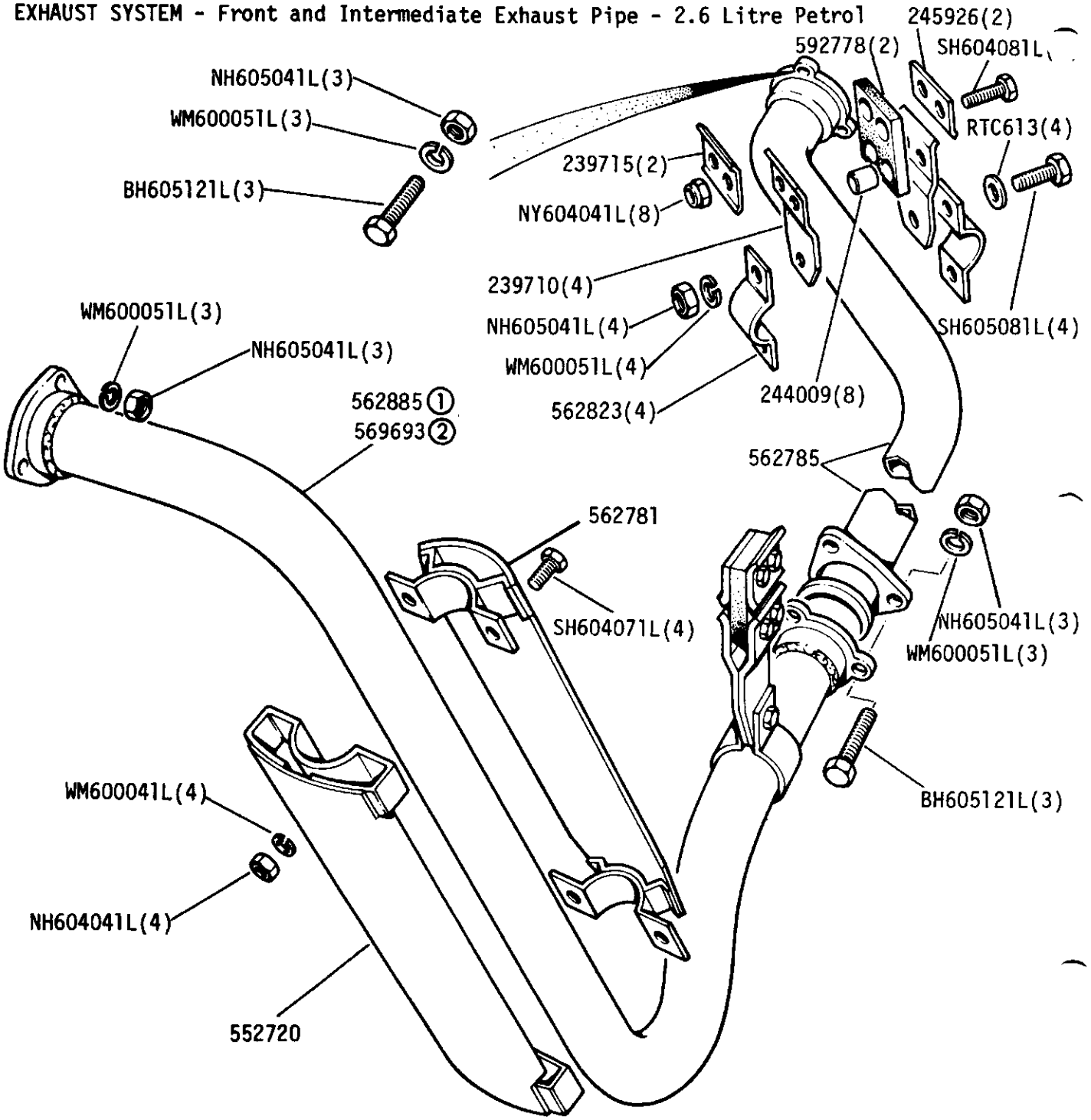

① Except 1 Ton
② 109 1 Ton

GROUP H
EXHAUST SYSTEM - Silencer and Tail Pipe - 2.6 Litre Petrol

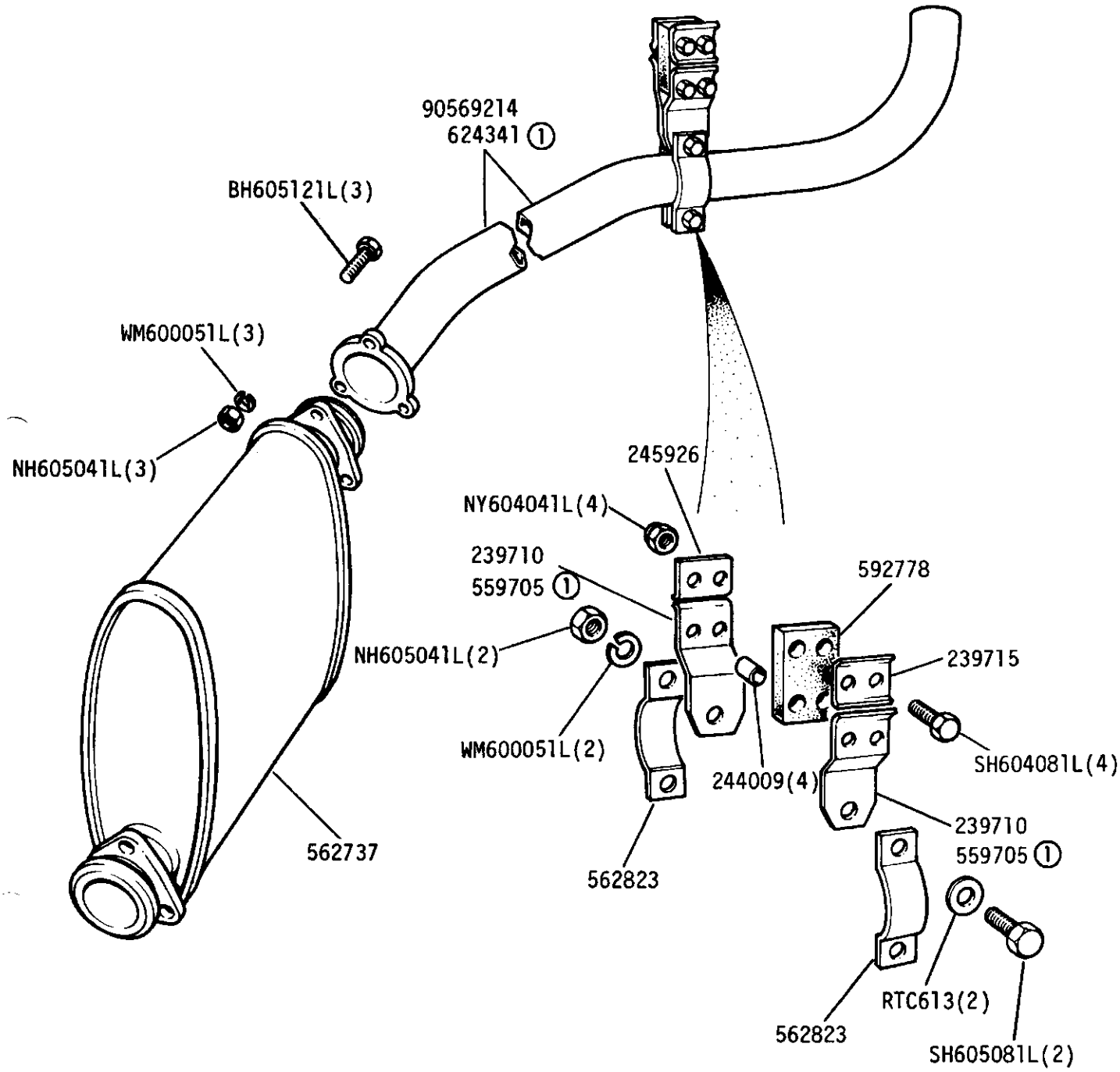

① Belgium

GROUP H
EXHAUST SYSTEM - Downpipes, 109V8

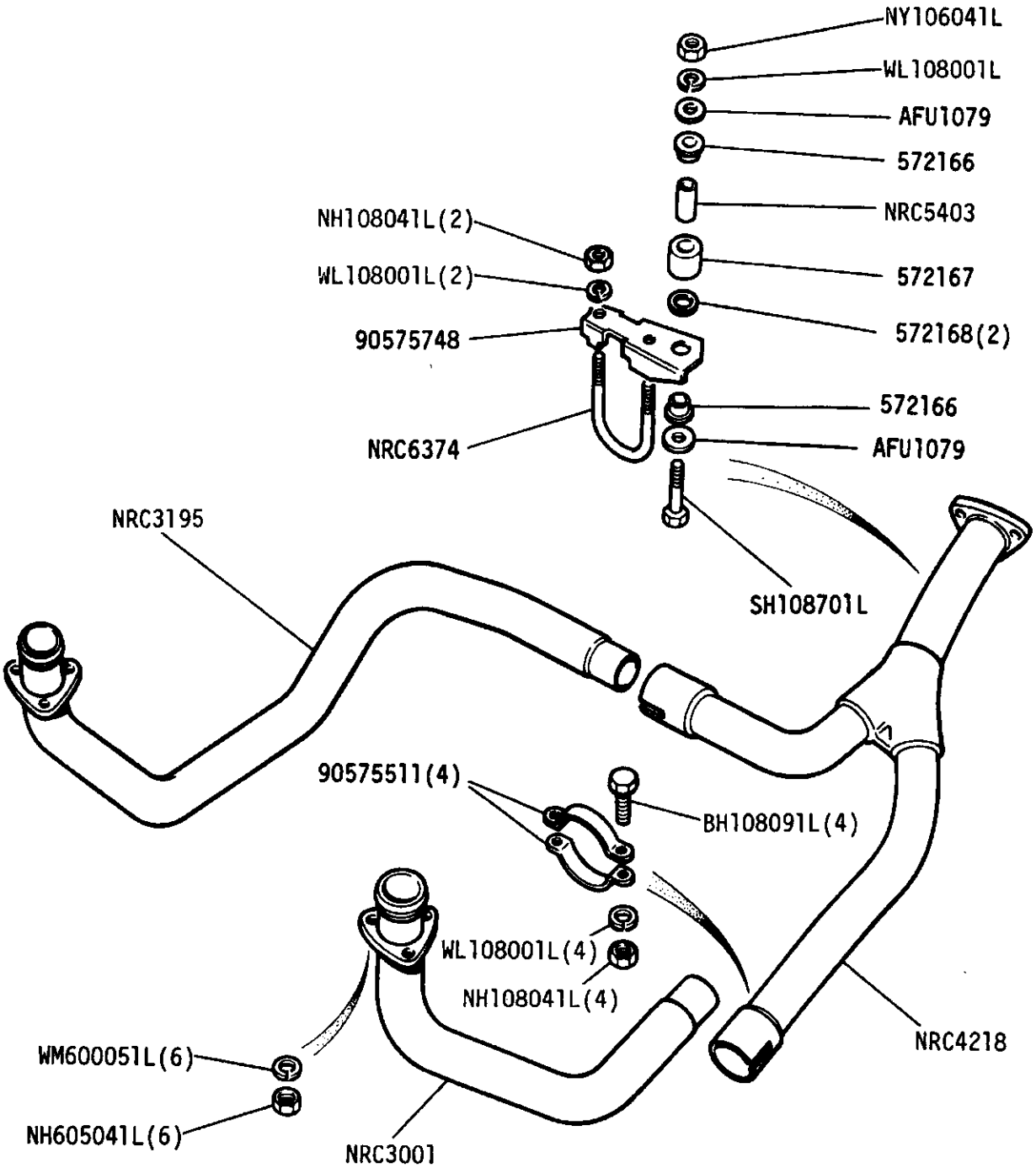

GROUP H
EXHAUST SYSTEM - Intermediate and rear silencers, 109V8

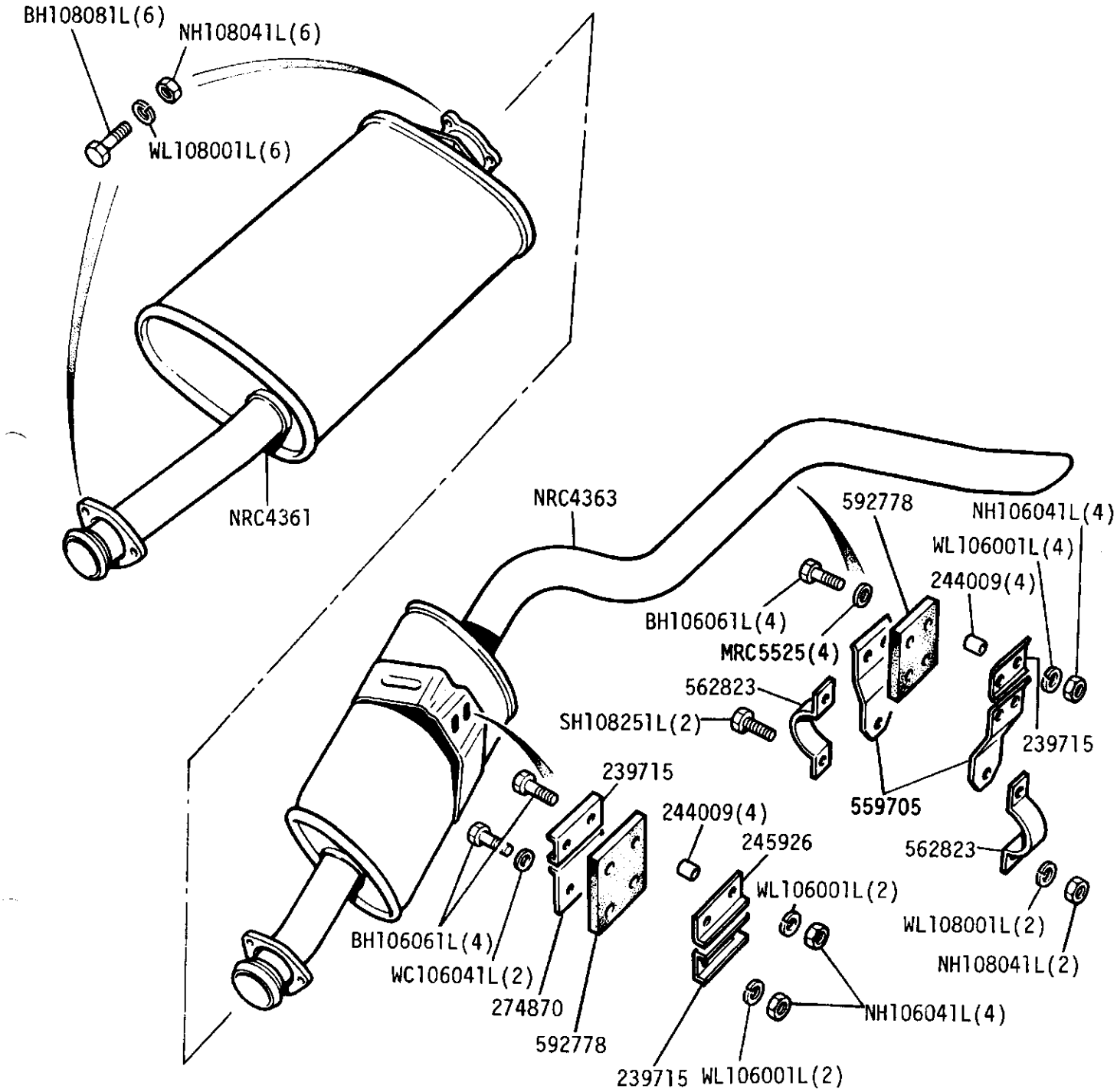

GROUP J

COOLING SYSTEM - Radiator and Hoses

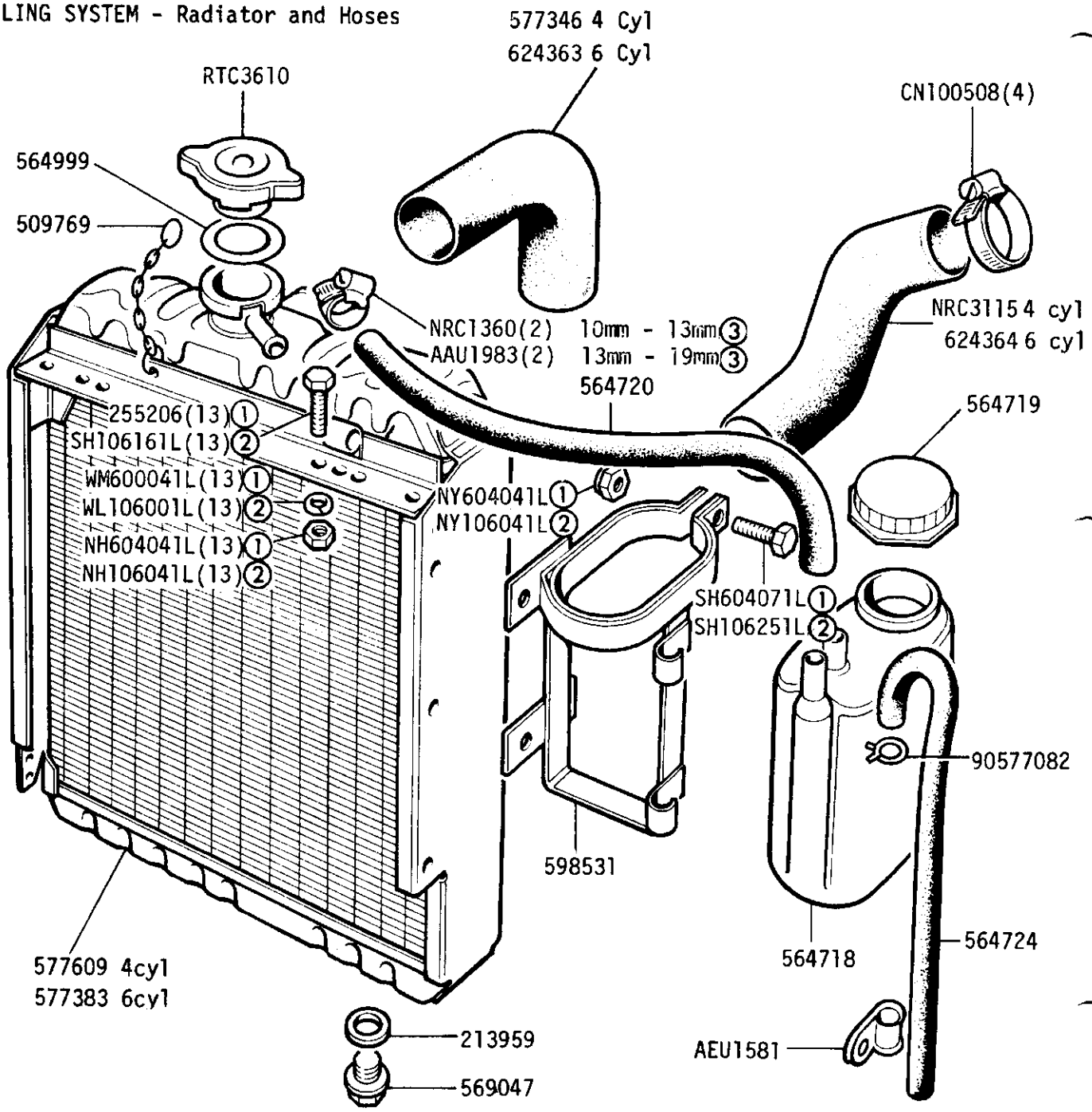

①UNF
②METRIC
③Alternatives - Check Before Ordering

GROUP J
COOLING SYSTEM - Radiator Cowl and Shroud

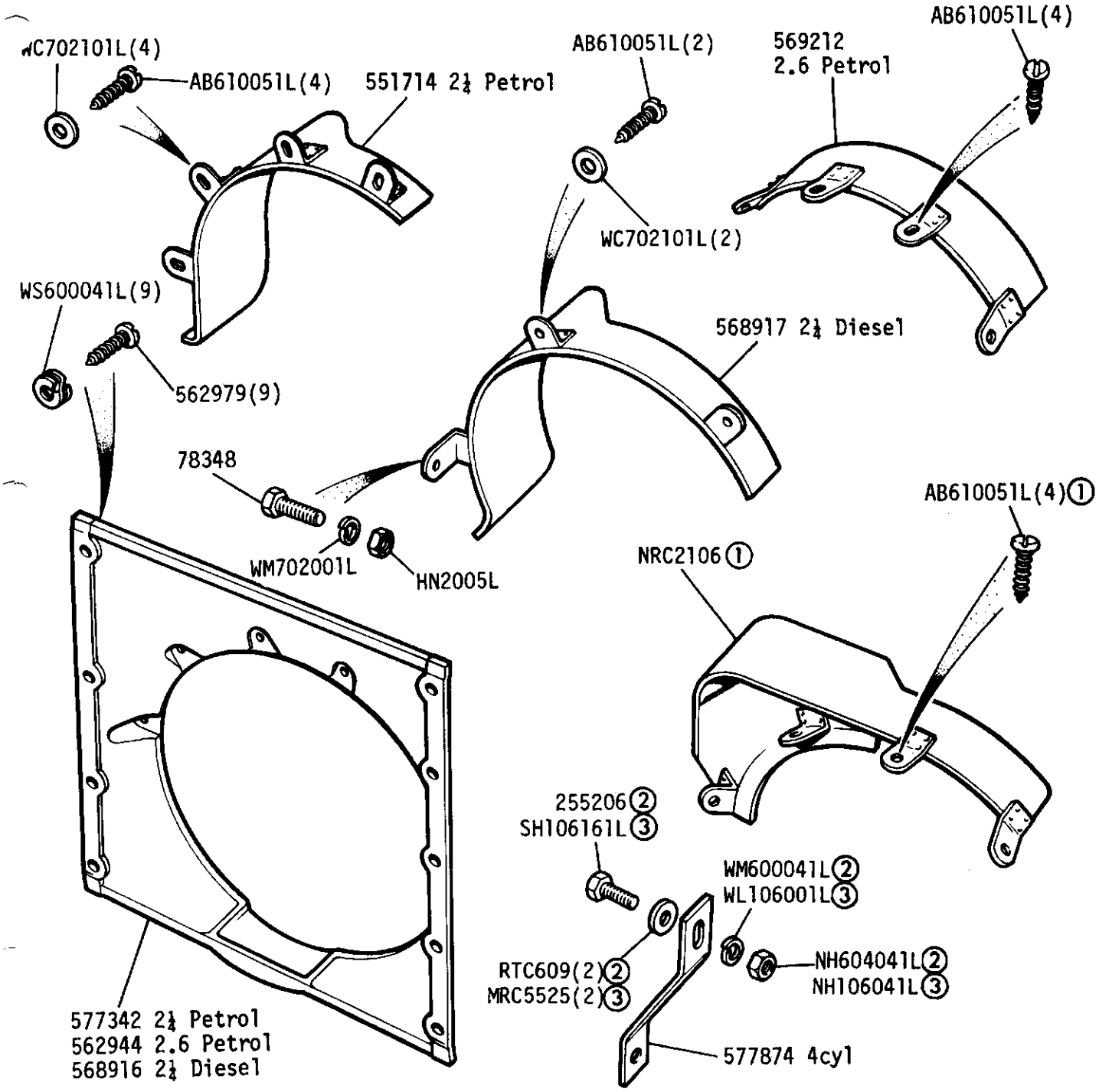

① 2.6 Petrol when Detoxed Engine is fitted
② UNF
③ METRIC

GROUP J
COOLING SYSTEM - Radiator and Fan Cowl - 109V8

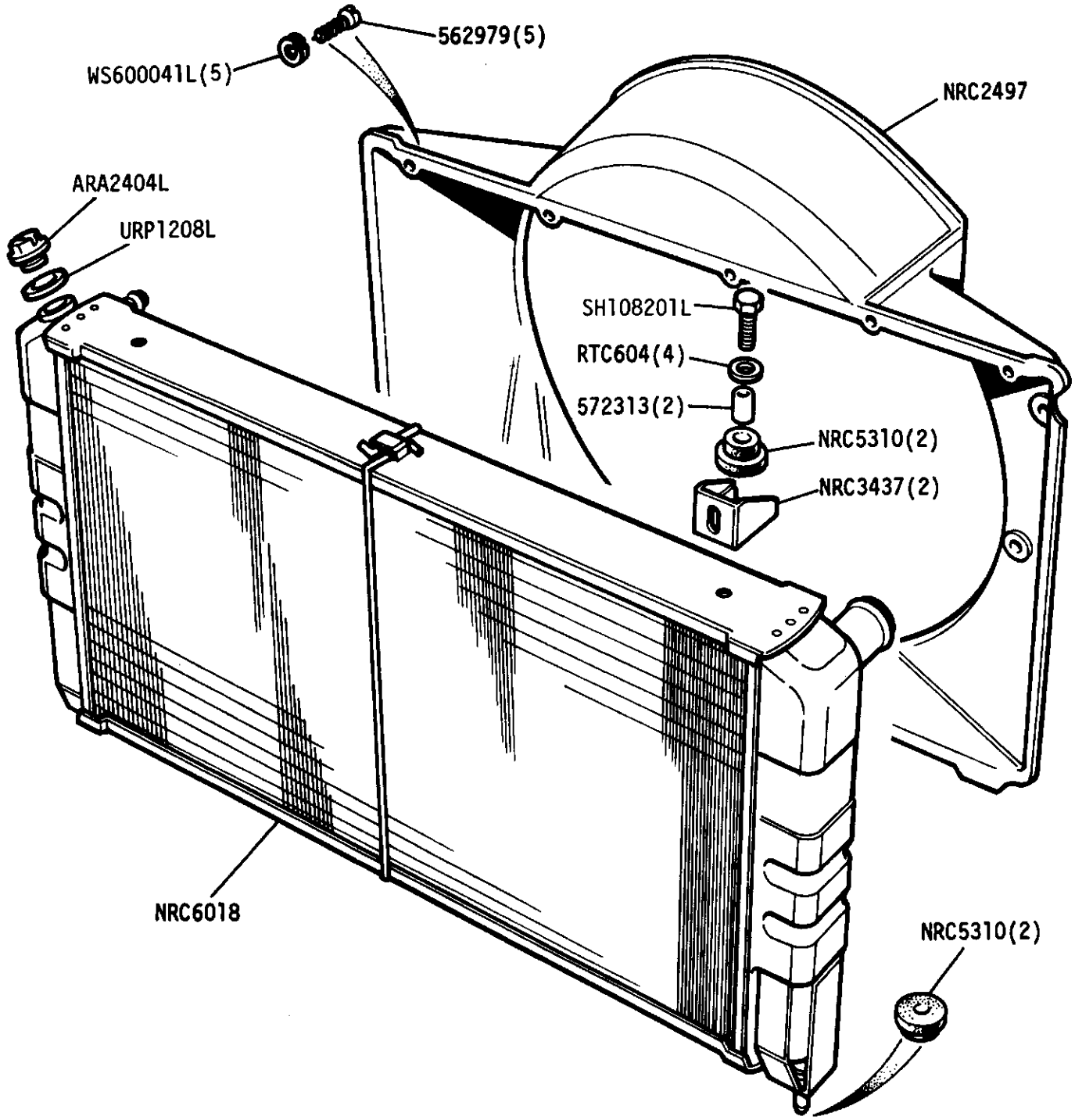

GROUP J
COOLING SYSTEM - Radiator Hoses - 109V8

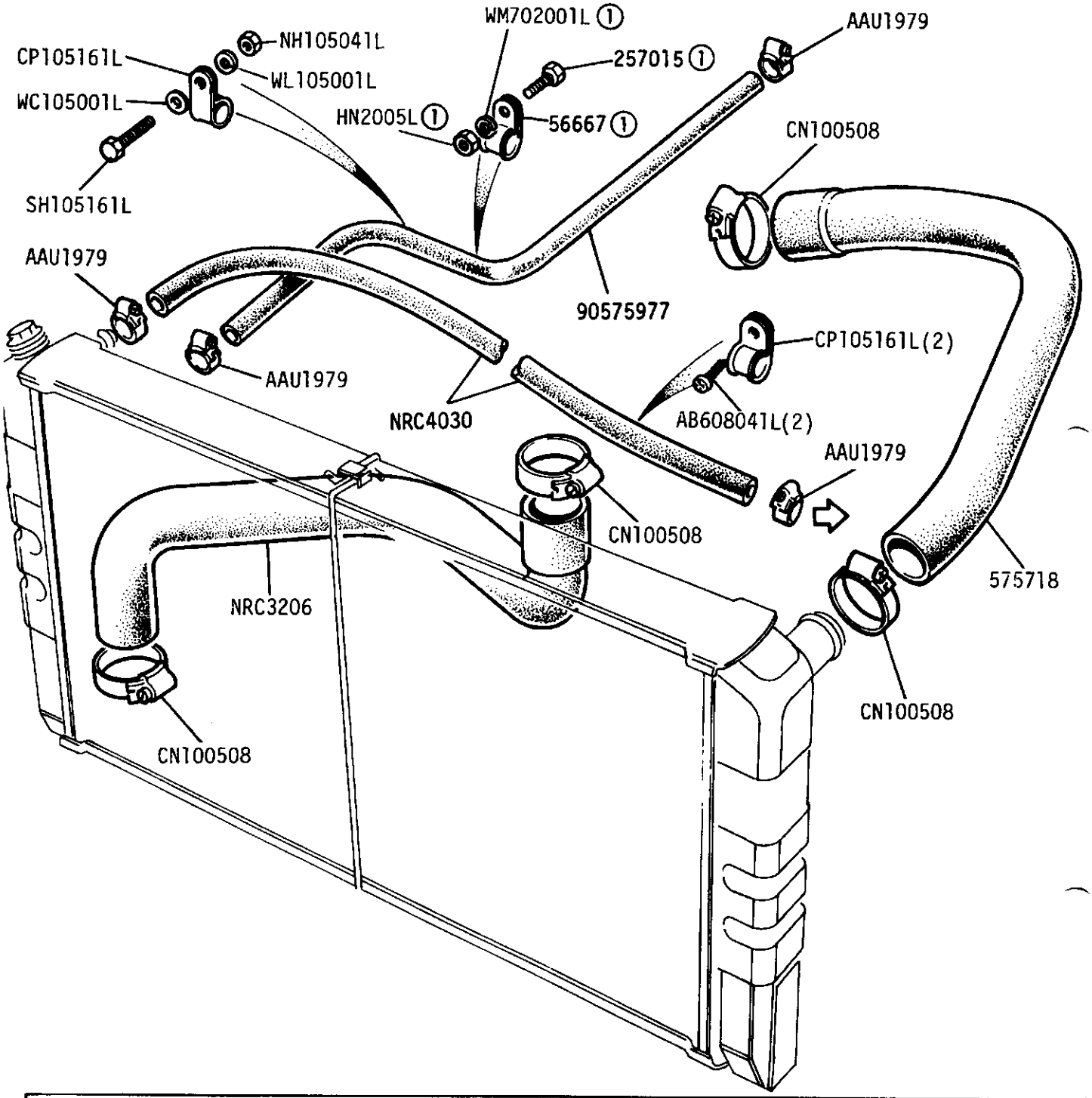

① Detoxed Engine

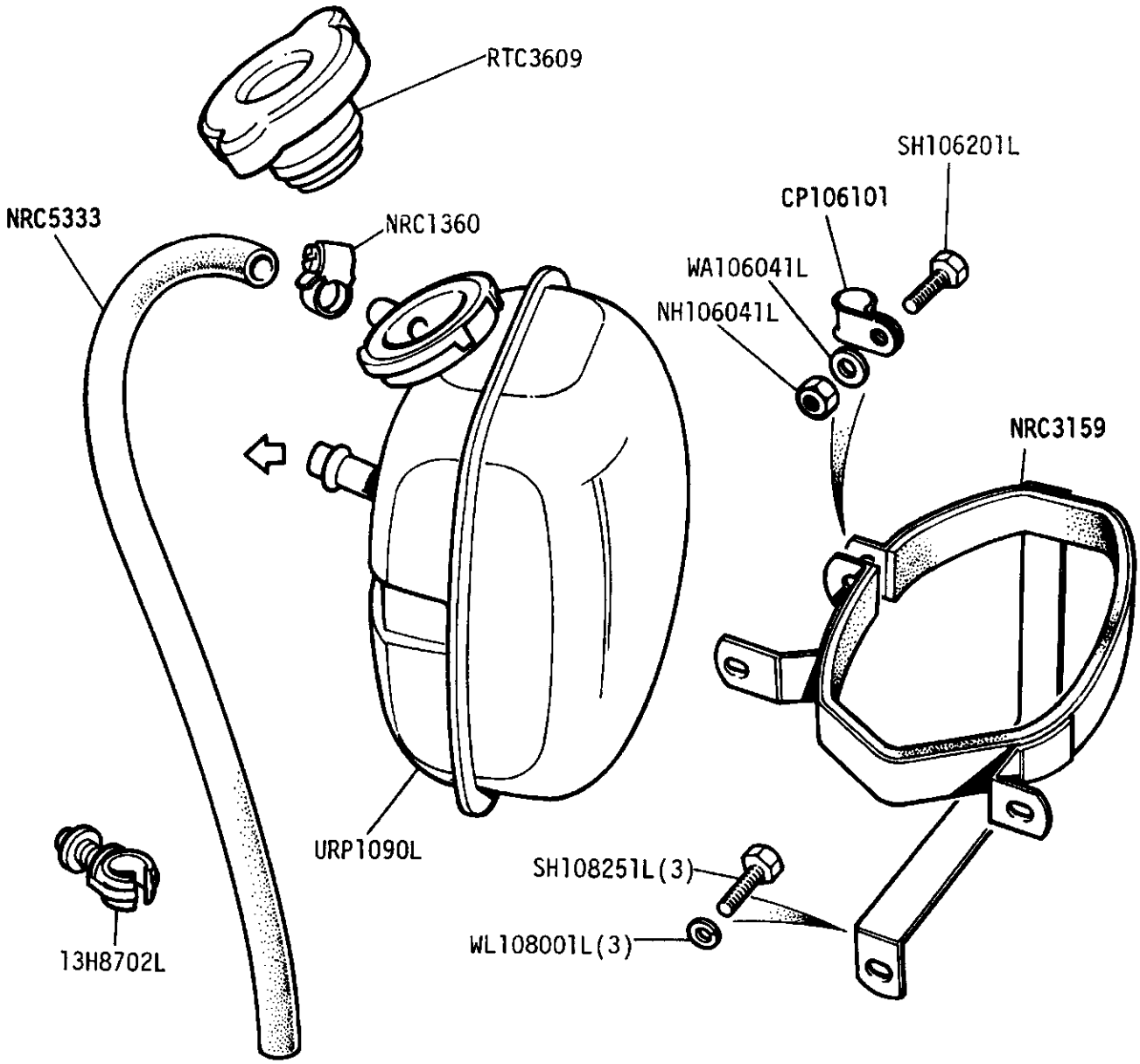
RTC3609
SH106201L
CP106101
NRC5333
NRC1360
WA106041L
NH106041L
NRC3159
URP1090L
SH108251L(3)
WL108001L(3)
13H8702L

ENGINE - Distributor and High Tension Leads. 2¼ Litre Petrol up to Engine Suffix C' inclusive

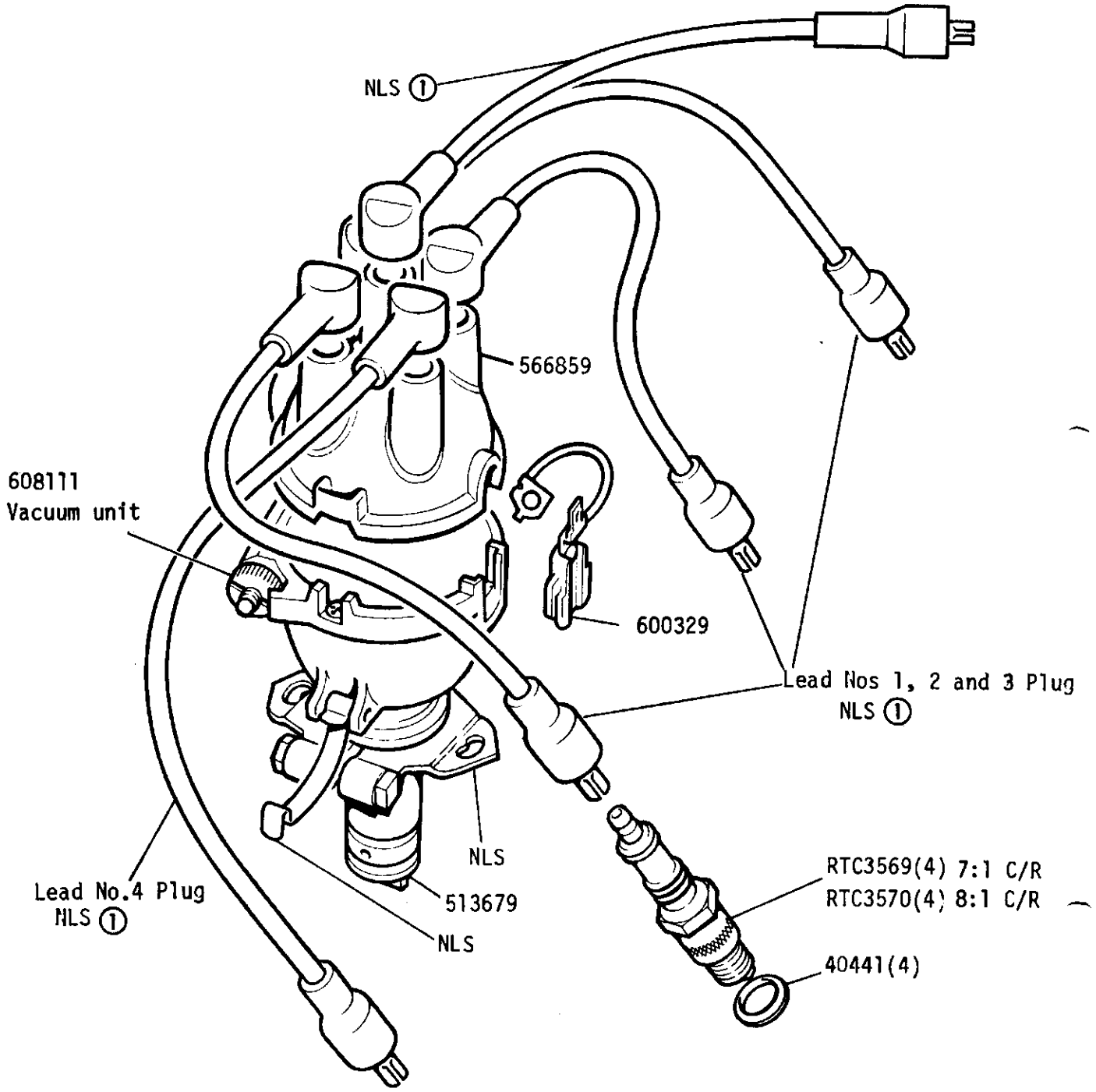

See adjacent frame for distributor components
Distributor complete see frame 2E 03
Sundry parts kit NLS
① Ignition lead set ERC3256

GROUP K

ENGINE - Distributor Components 2¼ Litre Petrol up to Engine Suffix 'C' inclusive

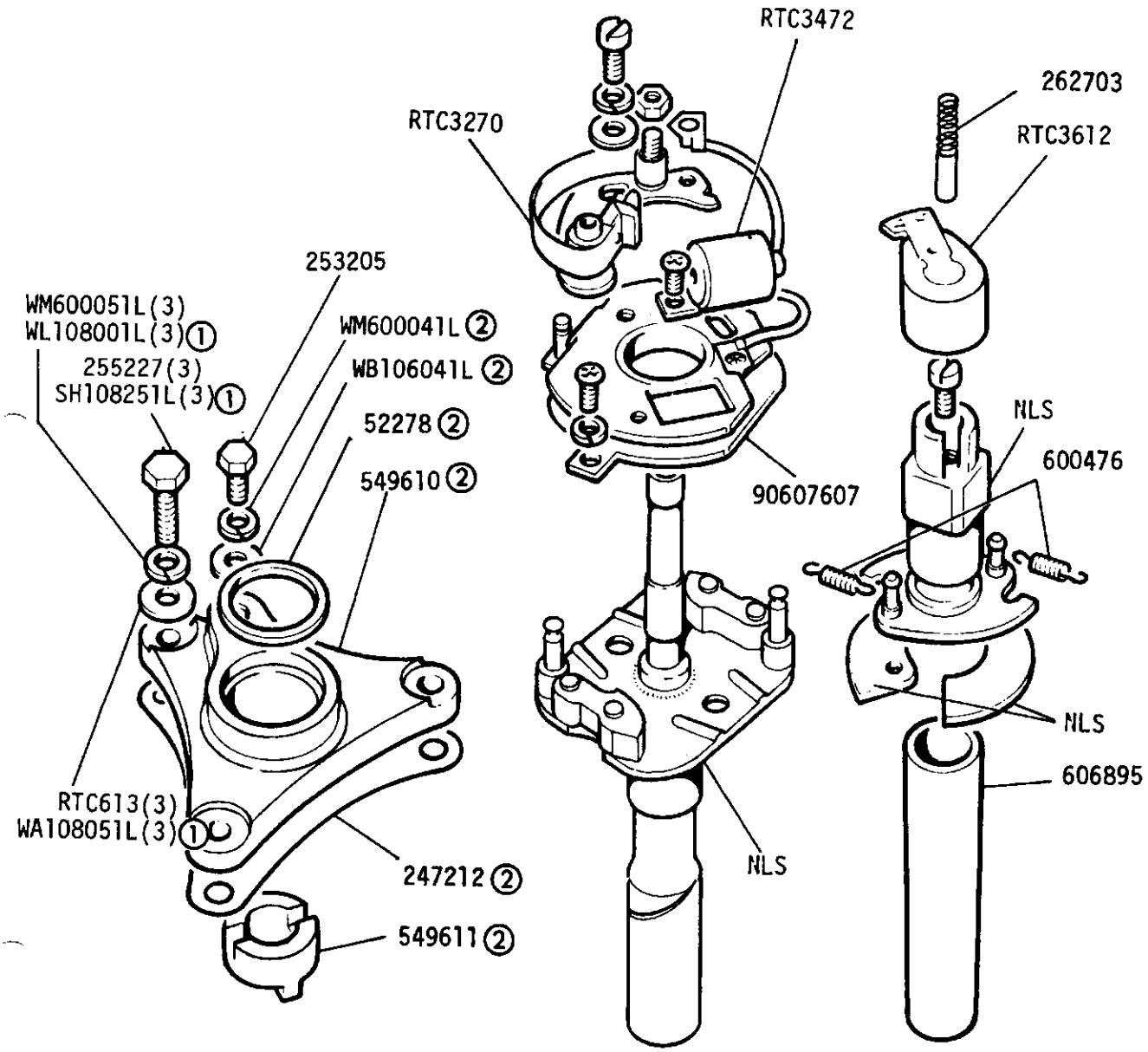

See adjacent frame for distributor components and external components

Sundry Parts Kit NLS

① From engine numbers 36123672B, 36407286B

② Also fitted from engine suffix D onwards

ENGINE - Distributor and high tension leads from engine suffix 'D' onwards-2¼ litre petro

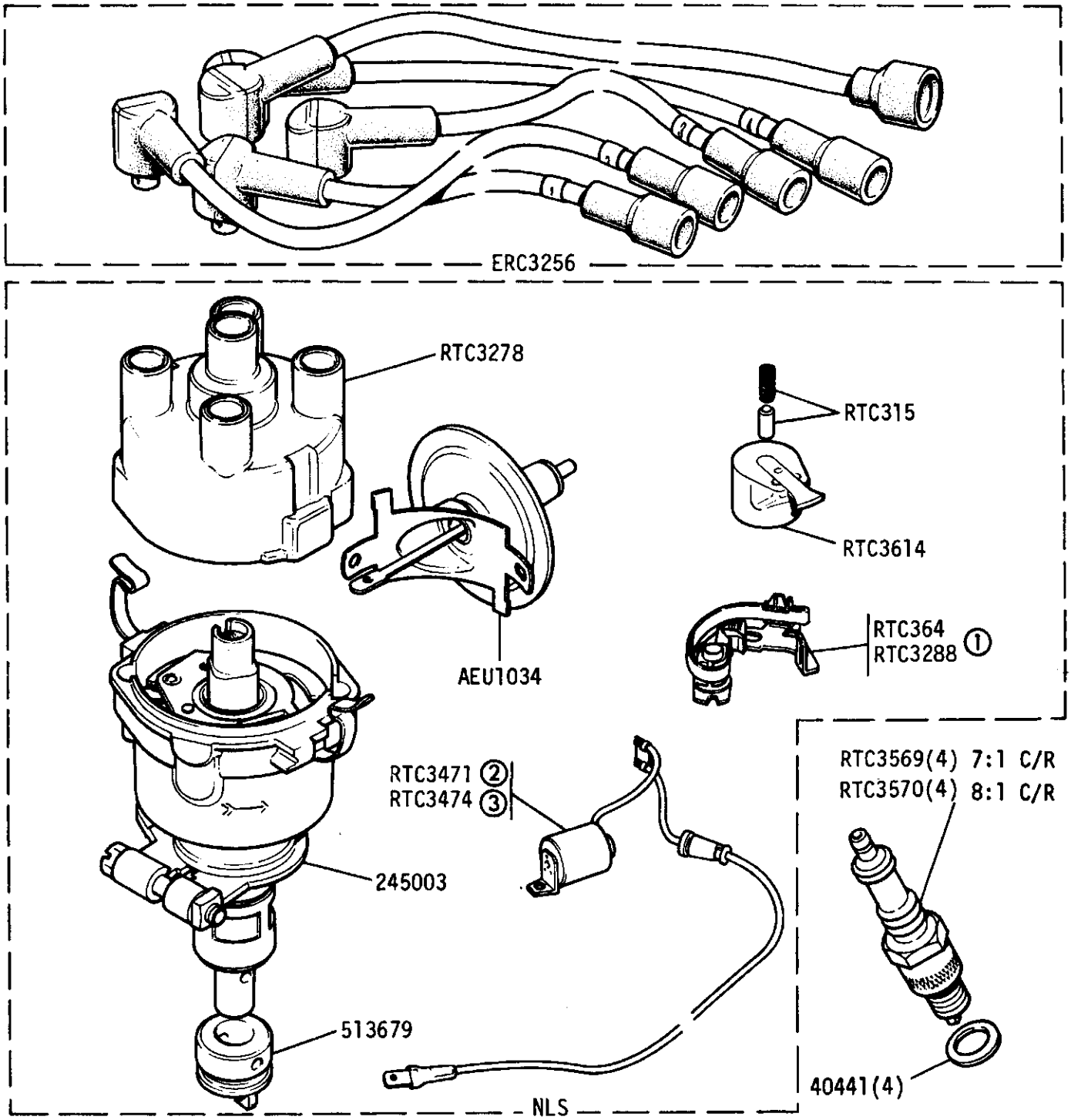

① Alternatives

② Long lead length 6⅞" | Alternatives
③ Long lead length17⅞" | Check before ordering

For complete distributor use RTC3875

GROUP K
ENGINE - Distributor and high tension leads 2¼ litre petrol.

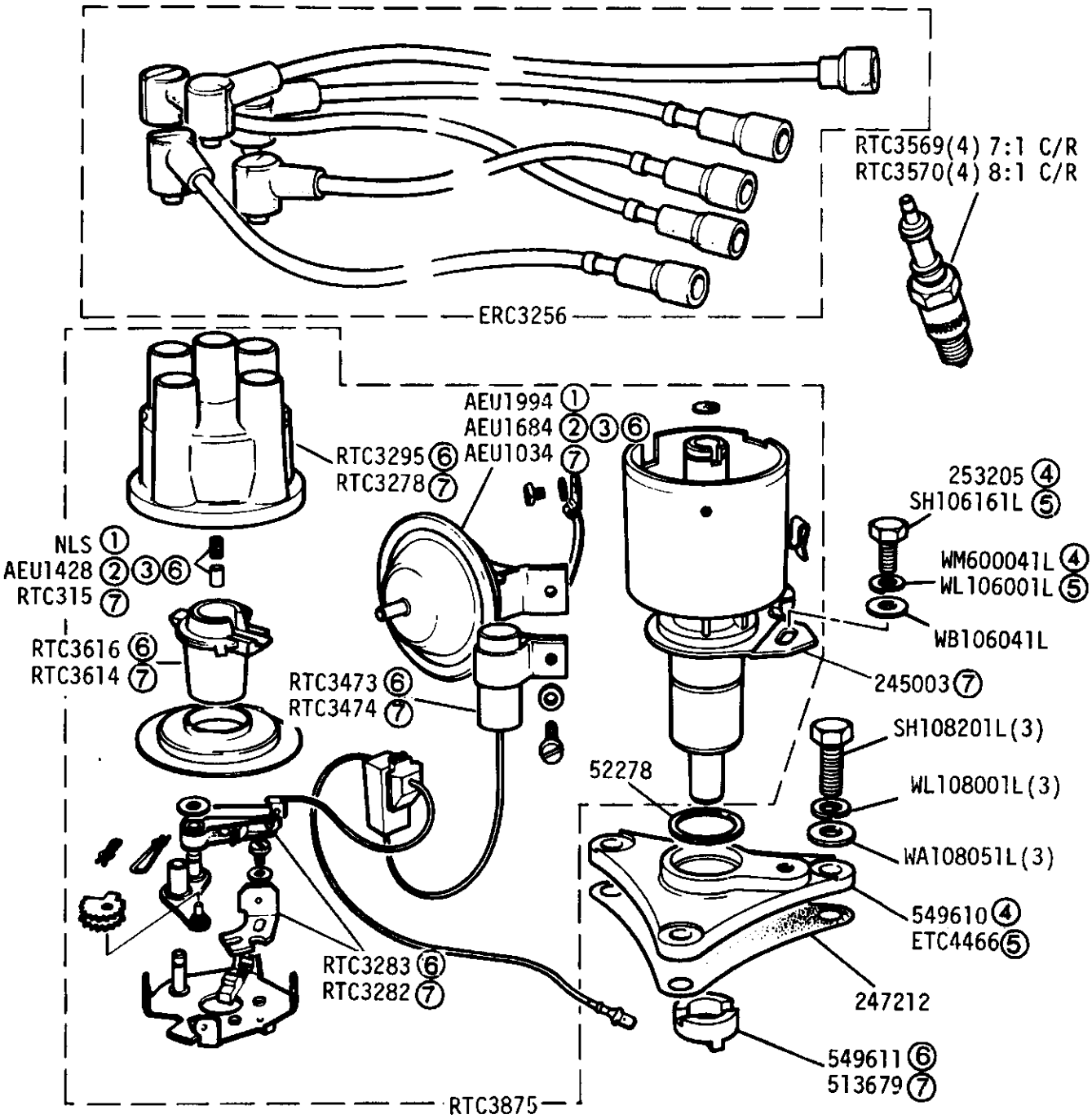

① For ECE15-03 European detoxed vehicles up to engine number 36116816A.
② For ECE15-03 European detoxed vehicles from engine number 36116817A.
③ For use on all other vehicles.
④ Engine prefix 901 and 904 and engines prefix 361 and 364 suffix A and B only.
⑤ Engines prefix 361 and 364 suffix C onward.
⑥ For use on Ducellier distributors.
⑦ For use on Lucas distributors.

GROUP K

ENGINE - Distributor and Heat Shield 2.6 Litre Petrol
Up to Engine Suffix 'B' inclusive

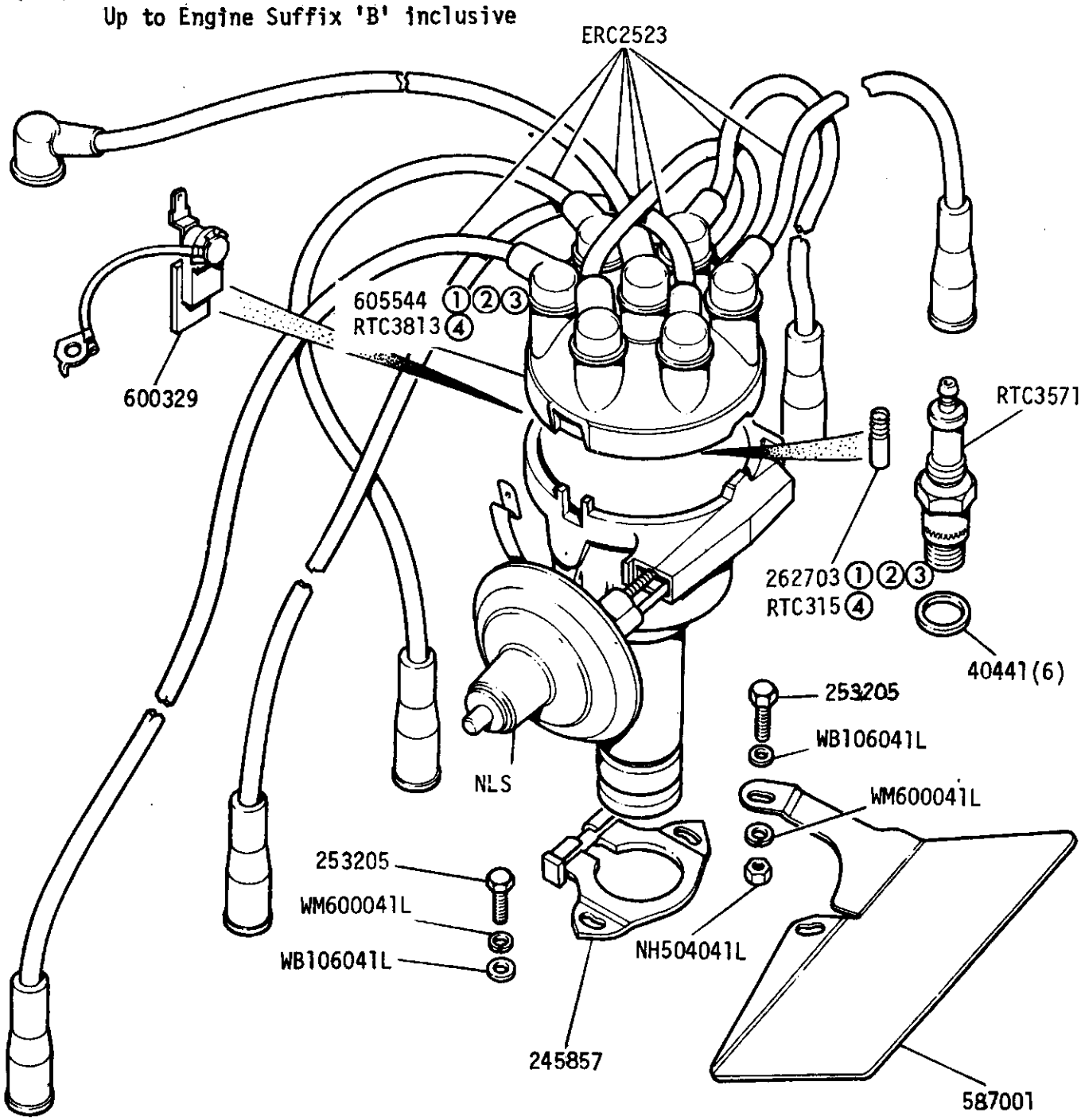

Distributor Complete AEU1124

Sundry Parts Kit NLS

① Use with Distributor 568729 Lucas 41227)
② Use with Distributor 597735 Lucas 41498)
③ Use with Distributor ERC545 Lucas 41585) Check before ordering
④ Use with Distributor AEU1124 Lucas 41631)

GROUP K

ENGINE - Distributor Components 2.6 Litre Petrol
Up to Engine Suffix 'B' inclusive

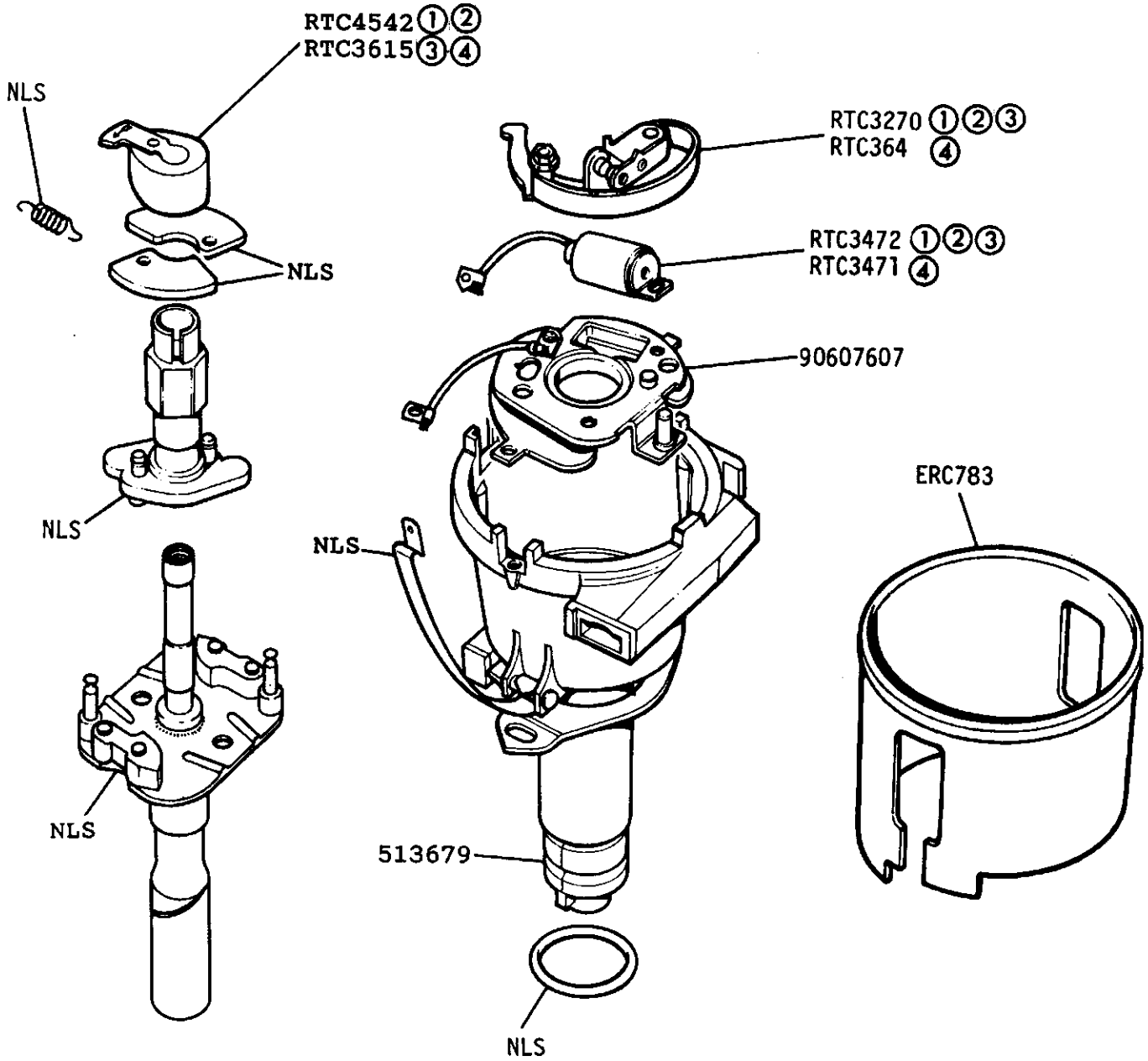

Distributor Complete AEU1124
Sundry Parts Kit NLS

① Use with Distributor 568729 Lucas 41227)
② Use with Distributor 597735 Lucas 41498)
③ Use with Distributor ERC545 Lucas 41585) Check before ordering
④ Use with Distributor AEU1124 Lucas 41631)

DETOXED ENGINE - Distributor Components 2.6 Litre Petrol From Engine Suffix 'C' onwards

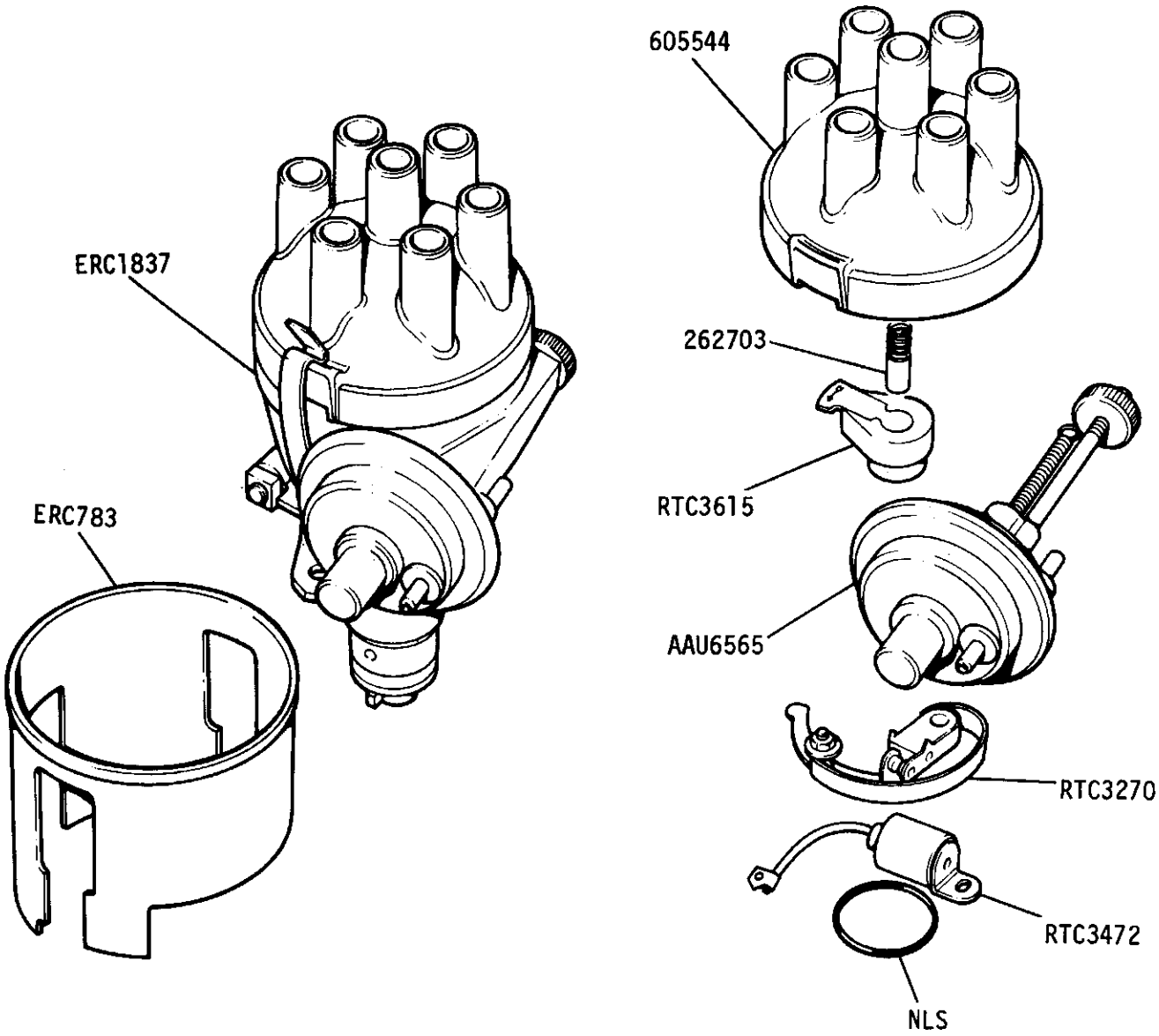

DETOXED ENGINE - Distributor Leads and Heat Shield 2.6 Litre Petrol

From Engine Suffix 'C' onwards

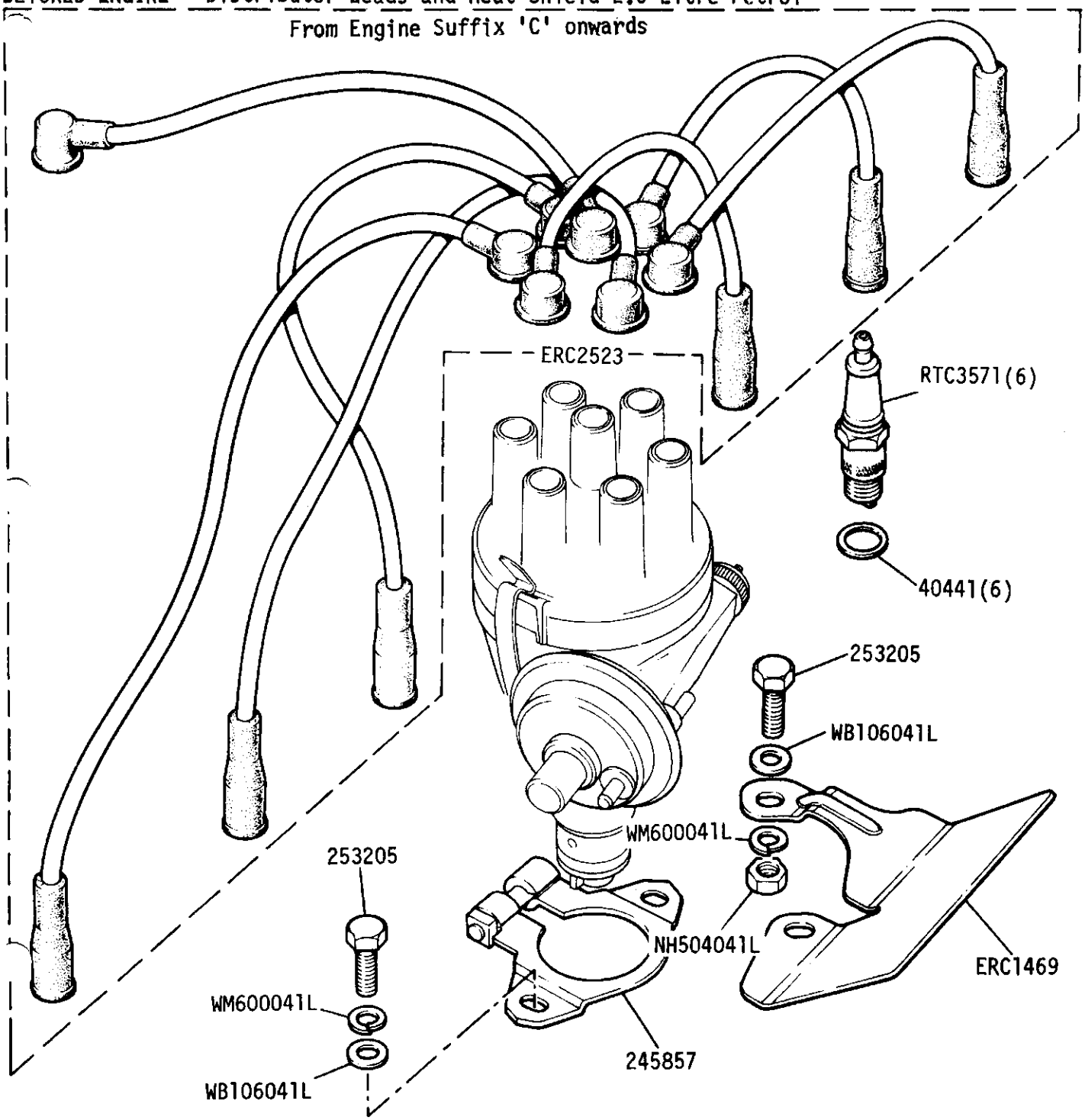

Distributor complete ERC1837

GROUP K
ENGINE - Distributor and Ignition Harness (Non-Detoxed Engine) 109 V8

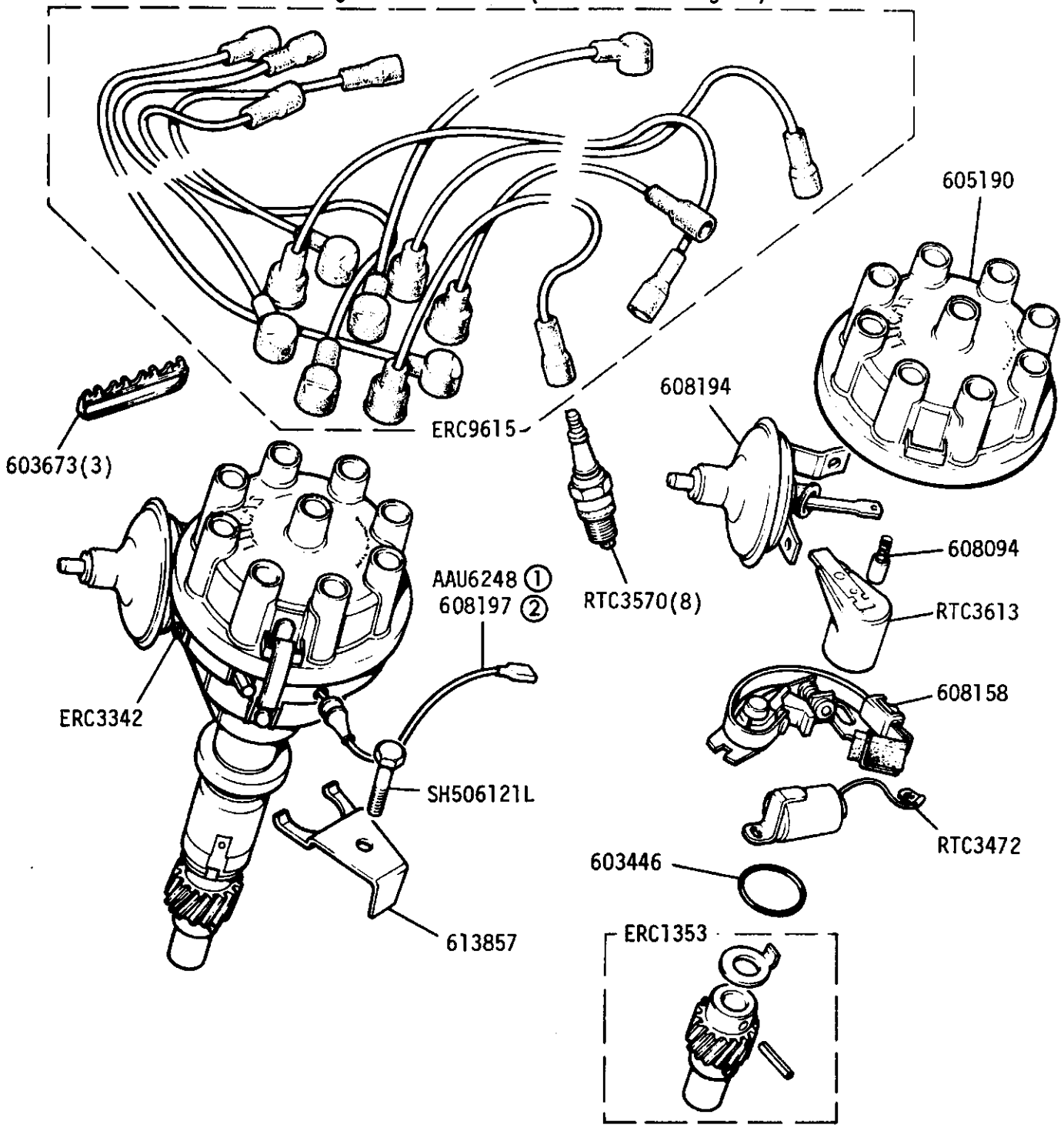

① 3 3/16" long	Use with Lucas 41680 A and B
② 4" long	Use with Lucas 41680 D, E and F.

GROUP K
ENGINE - Distributor and Ignition Harness (Detoxed Engine) 109 V8

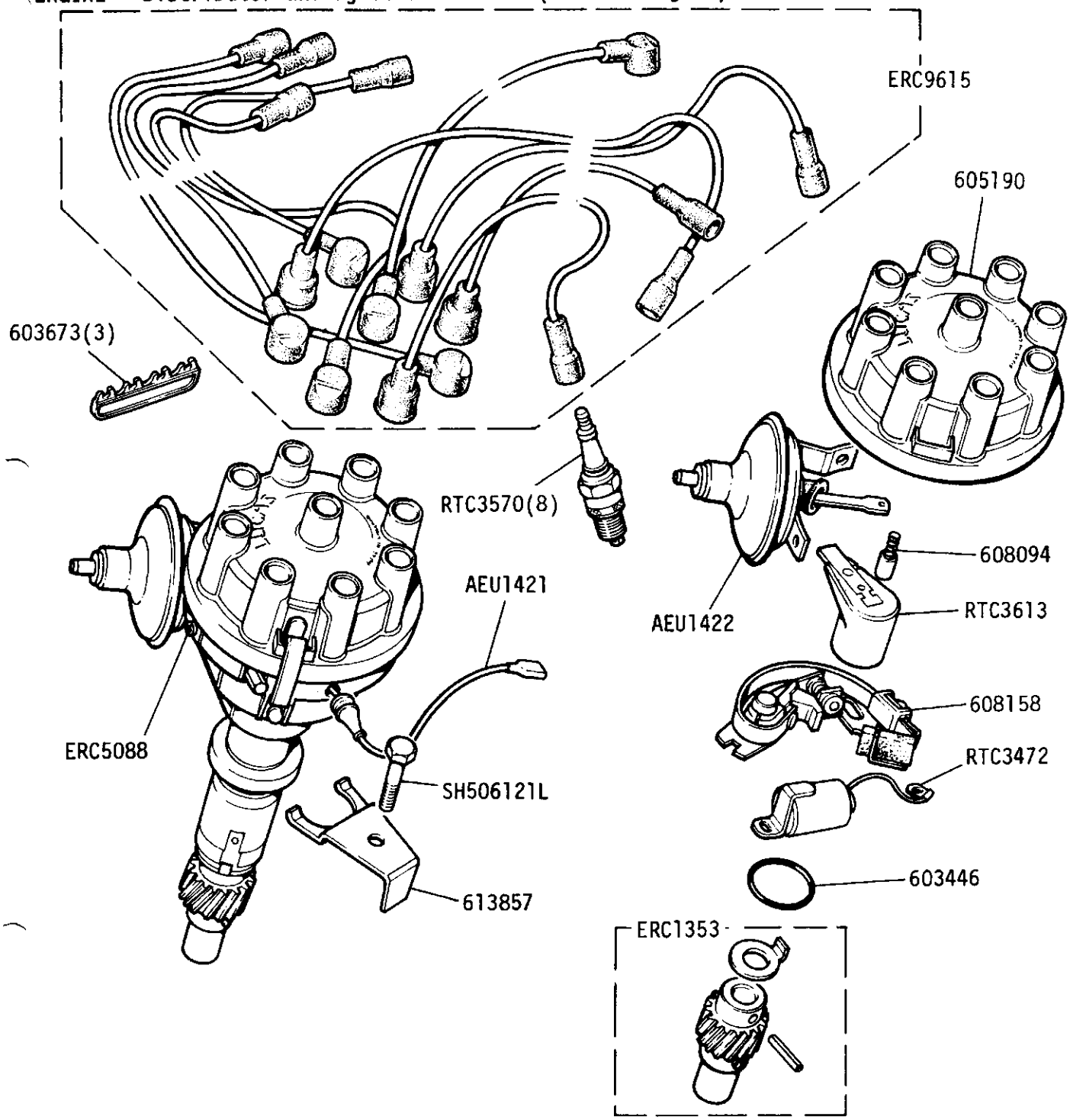

ENGINE - Starter Motor 2¼ Litre Petrol Type M418G

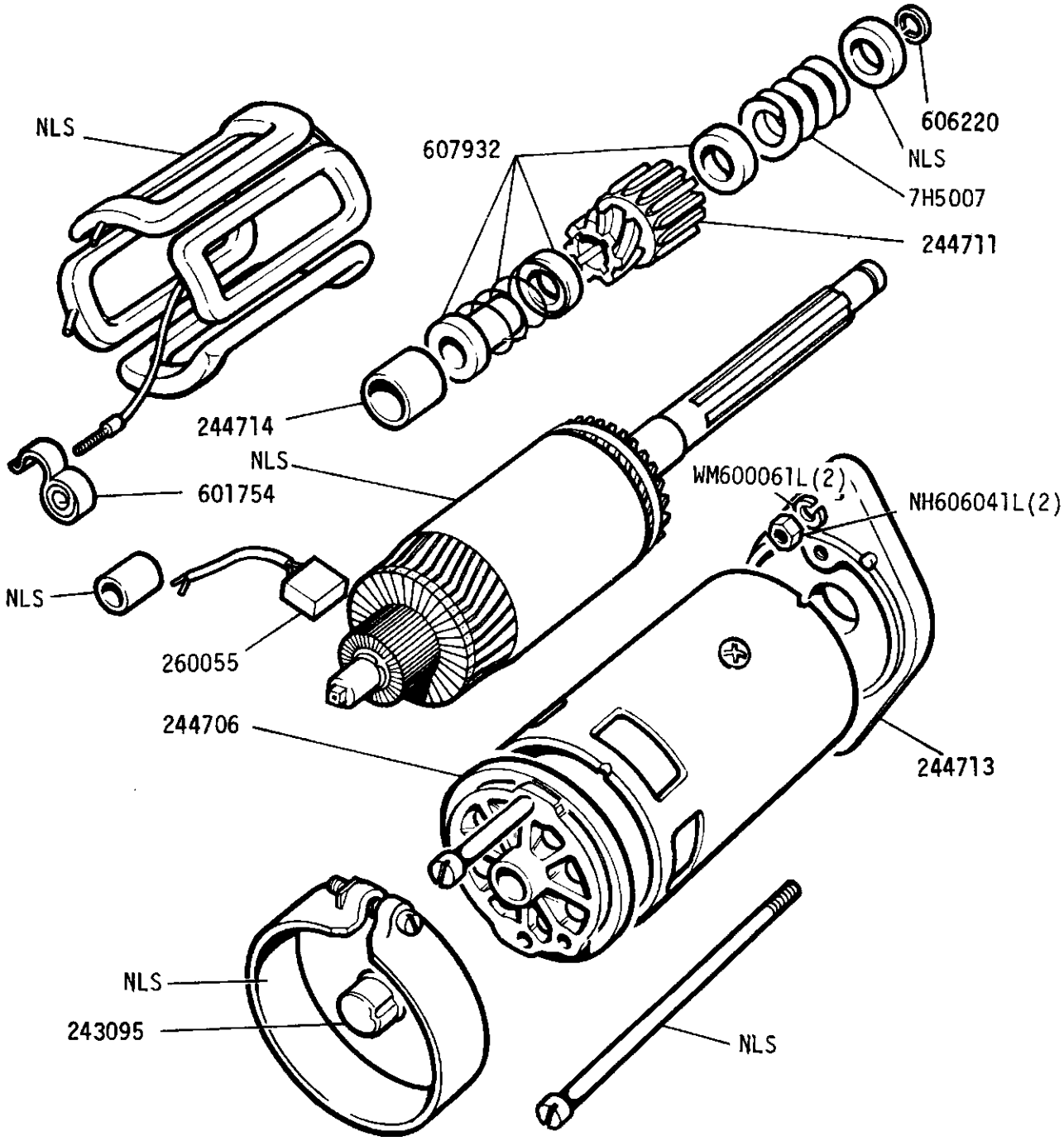

This Starter Motor Assembly is no longer available, now use RTC3854.

Sundry parts kit 244718

ENGINE - Starter Motor 2¼ Litre Petrol Type 2M100

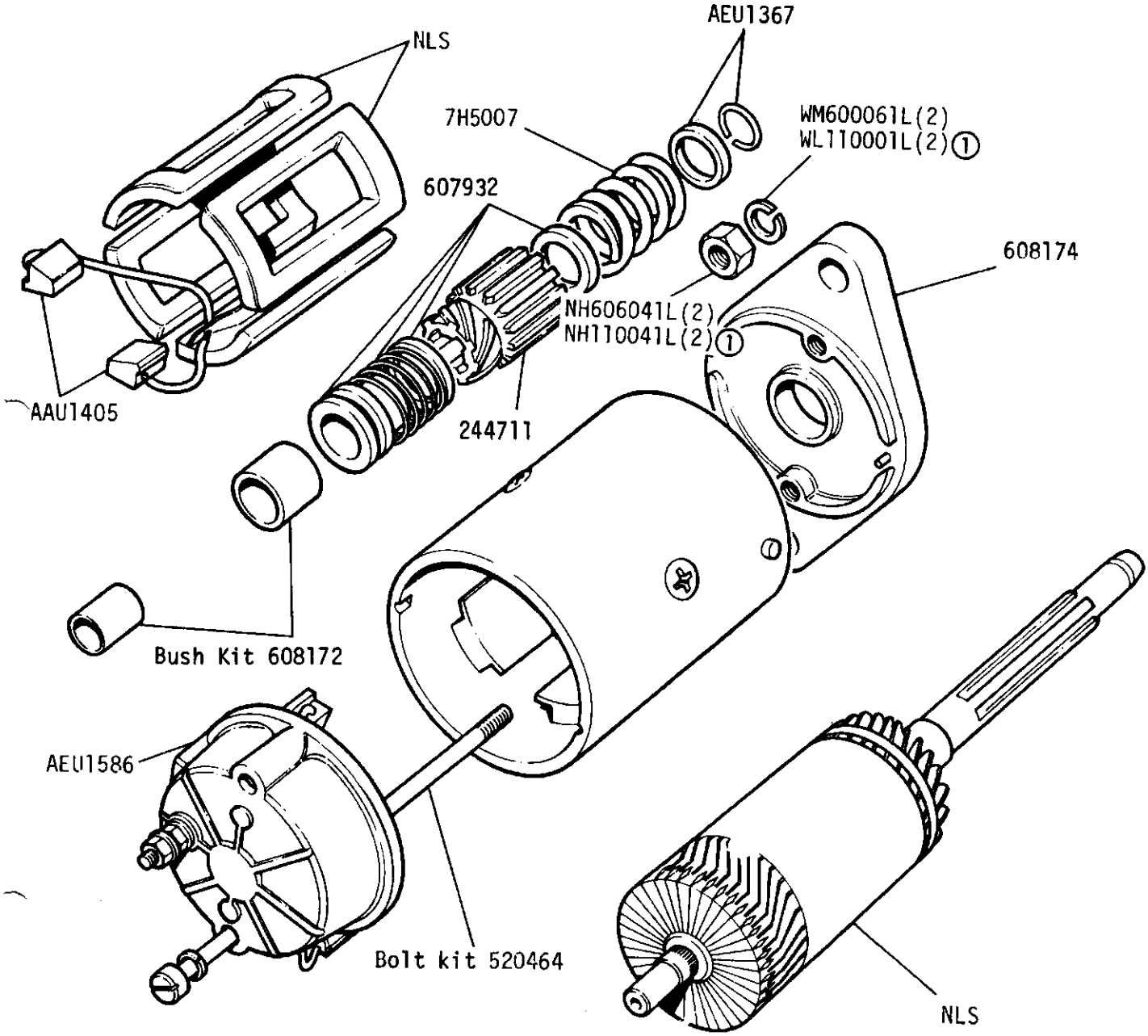

Starter Motor Assembly RTC3854
Sundry Parts Kit 90608178
① From engine numbers 36123672B, 36407286B

ENGINE - Starter Motor 2.6 Litre Petrol Type M418G

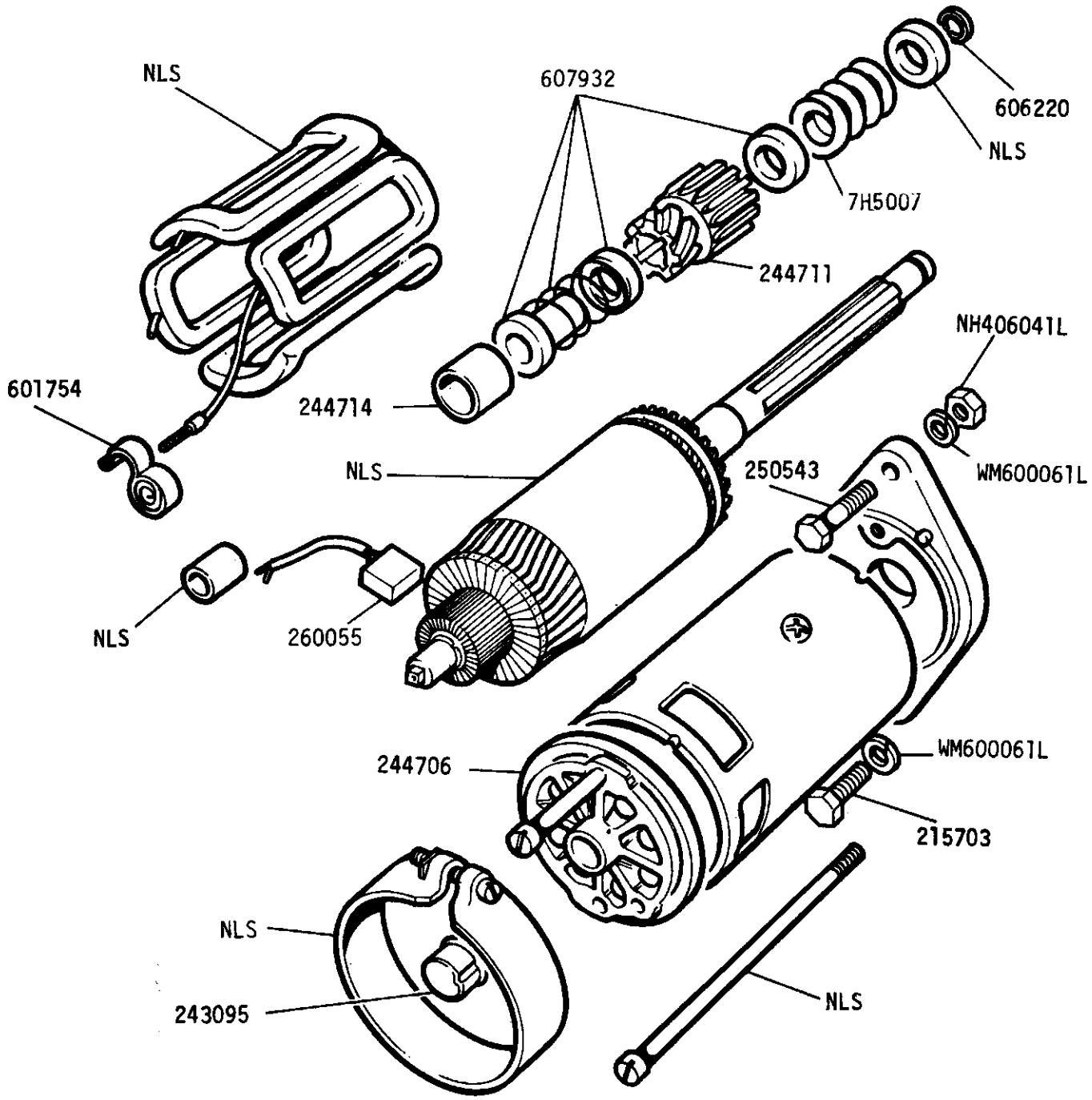

This Starter Motor Assembly is no longer available, now use RTC3854.

Sundry parts kit 244718

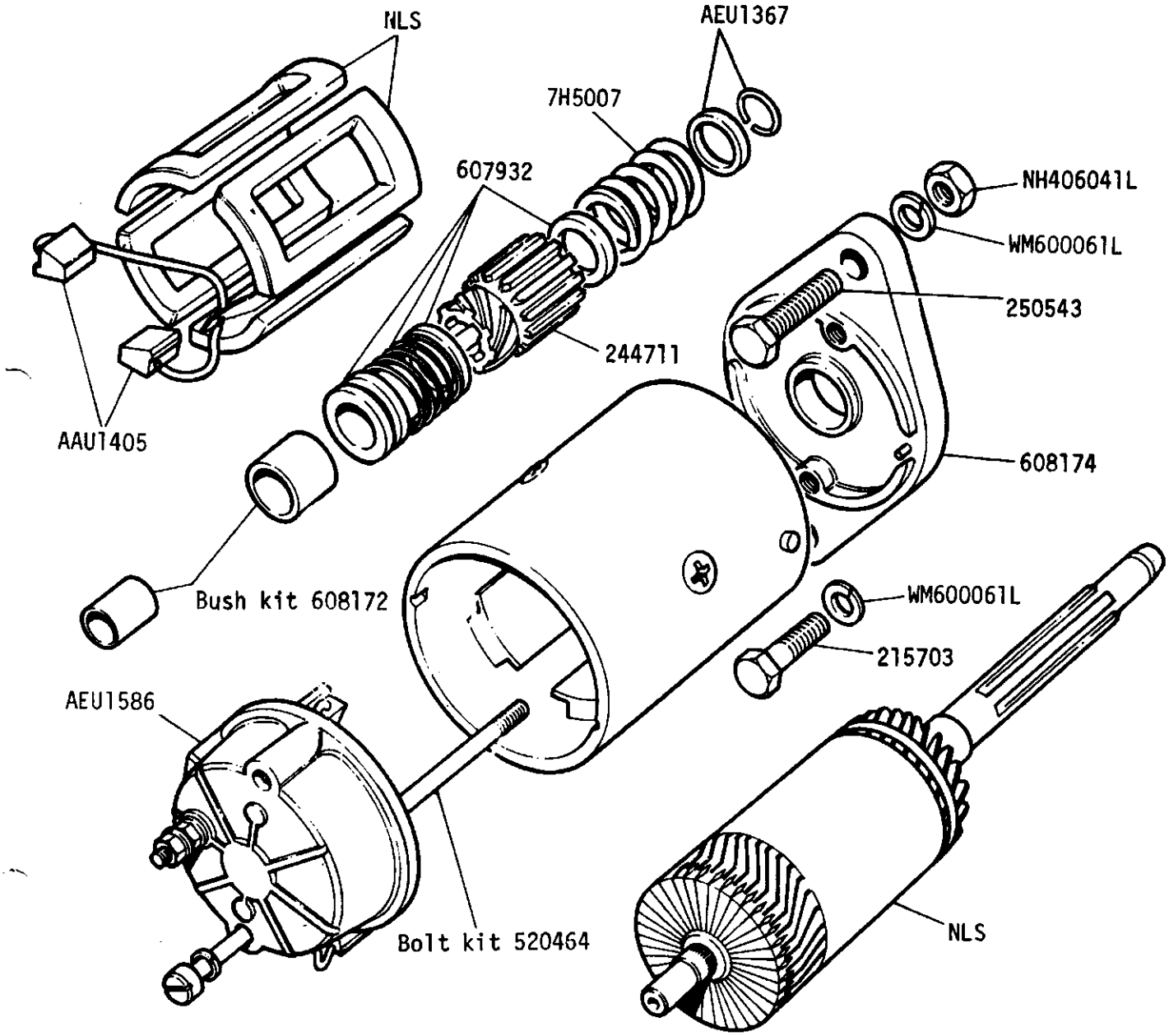

Starter Motor Assembly RTC3854
Sundry Parts Kit 90608178

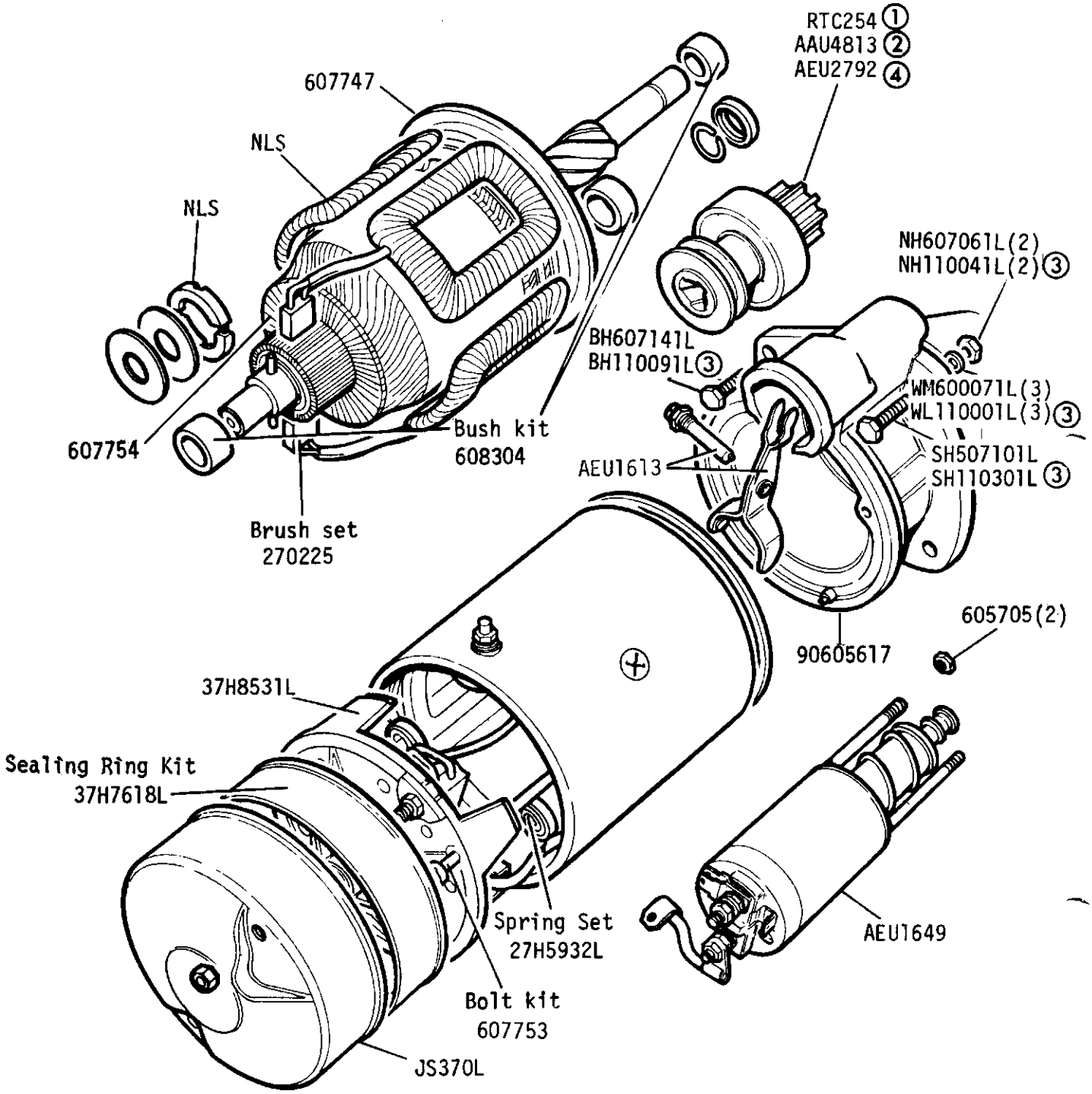

Starter motor complete RTC3857
Sundry parts kit 605622
Spindle and contact plate for starter solenoid 605653
① For use with Starter 579487 Lucas 26321 A.B or C.
② For use with Starter 579487 Lucas 26321 D onwards.
③ From engine number 36619420B
④ For use with Starter RTC3857 Lucas 27425.

GROUP K
STARTER MOTOR - Type 3M100, sealed 109 V8

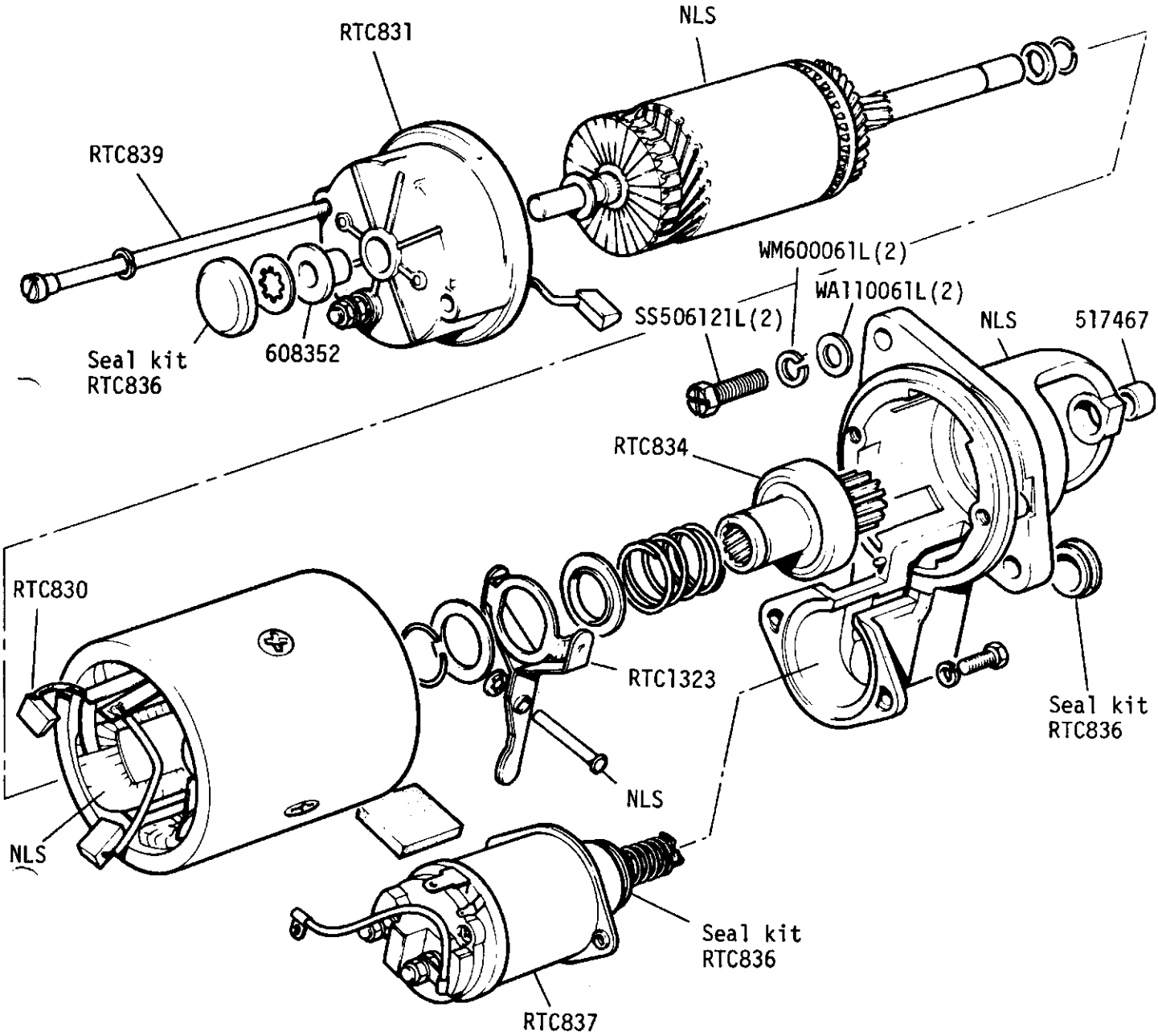

Starter Motor Complete RTC3860
Sundry Parts Kit 90608178

GROUP K
ENGINE - Alternator - 16ACR 12 Volt 34 Amp Machine Sensed
2¼ Litre Petrol Engine Suffix 'A'

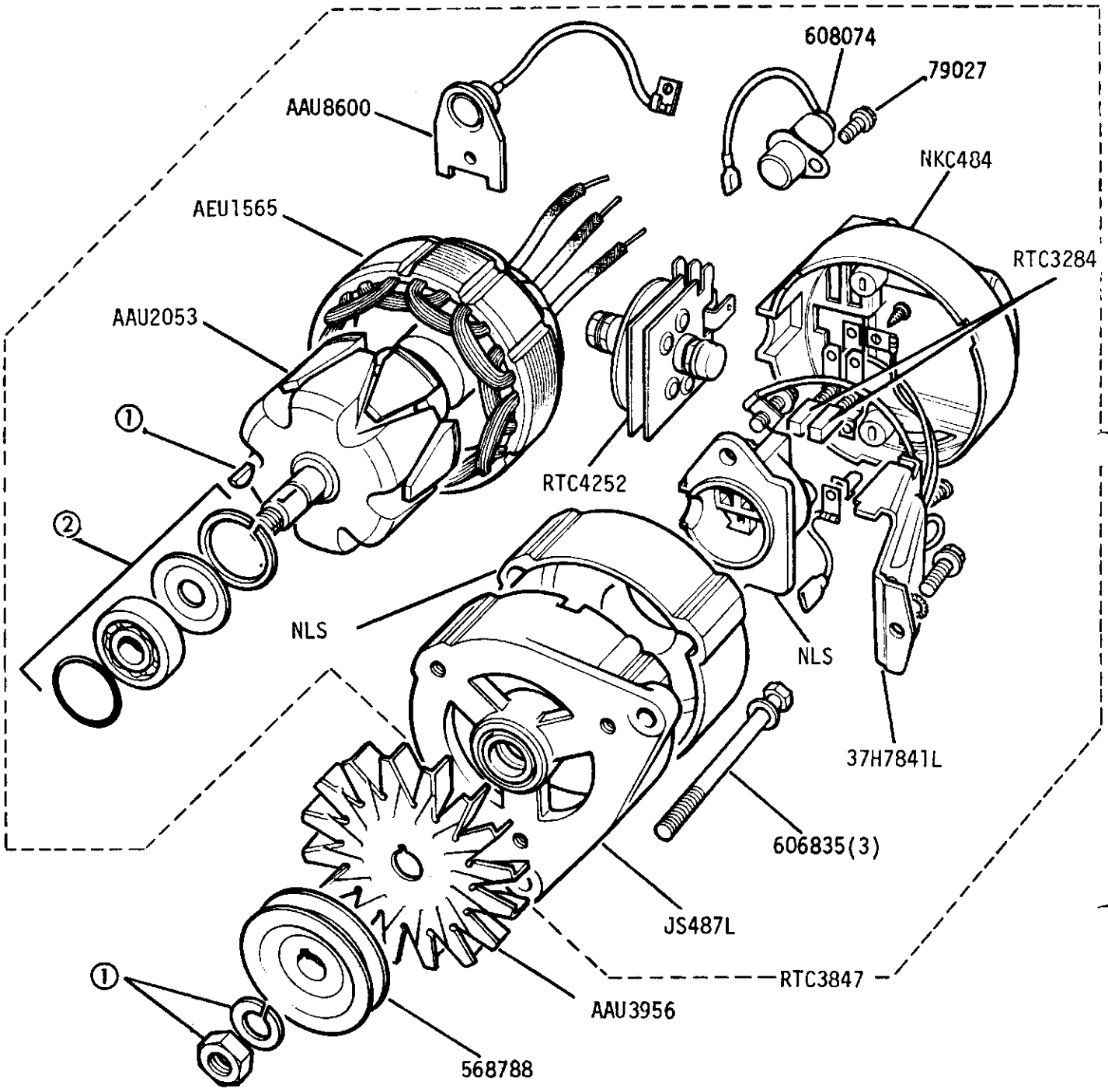

① Sundry Parts Kit JS495L

② Bearing Kits
Slip Ring End 18G8620L
Drive End 18G8619L 35mm
Drive End 518848 42mm
Alternatives

GROUP K

ENGINE - Alternator - 16 ACR 12 Volt 34 Amp Battery Sensed 2¼ Litre Petrol
from Engine Suffix 'B' onwards

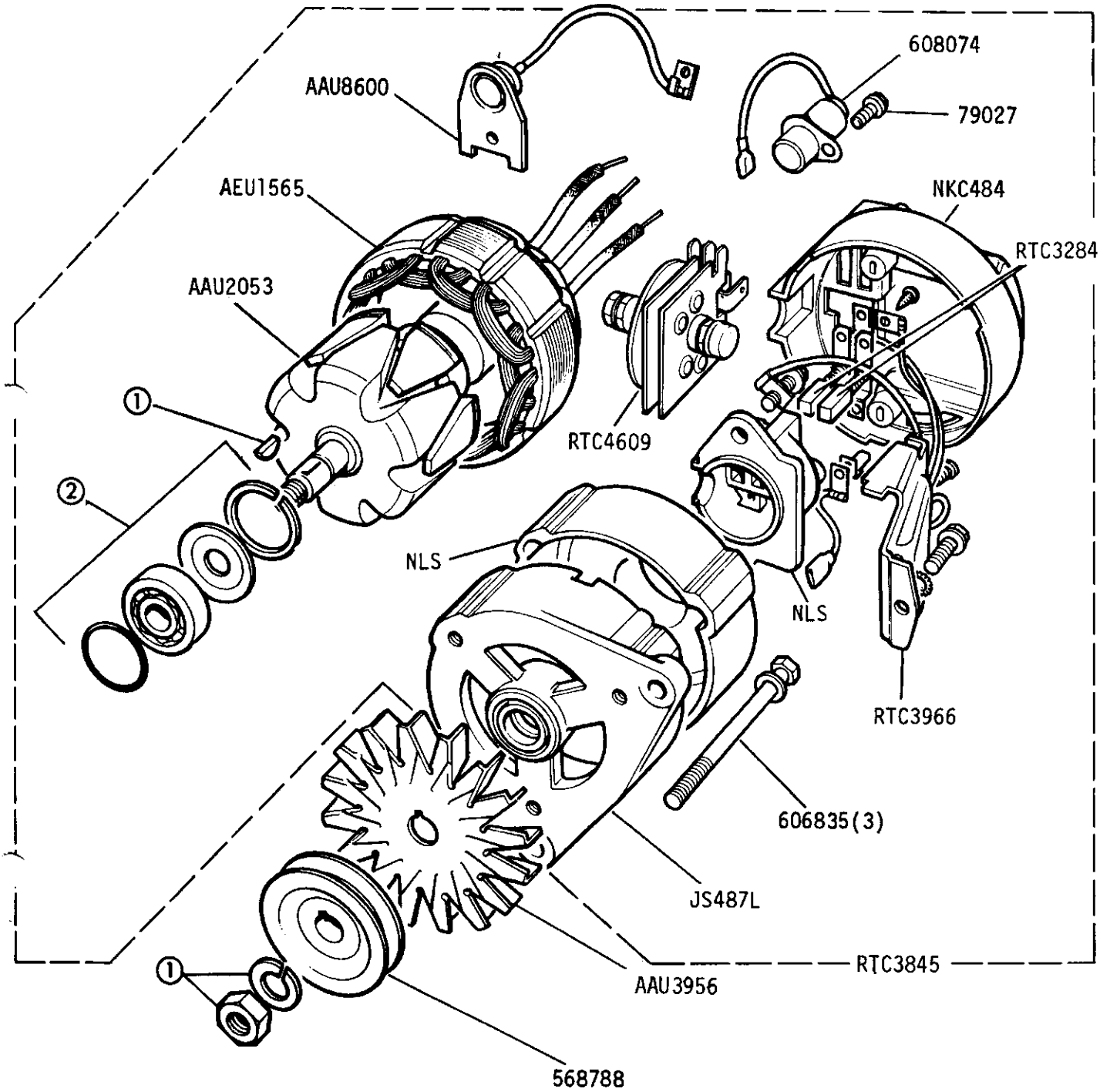

① Sundry Parts Kit JS495L

② Bearing Kits:-
Slip Ring End 18G8620L
Drive End 18G8619L

GROUP K
ENGINE - Alternator Fixings 2¼ Litre Petrol

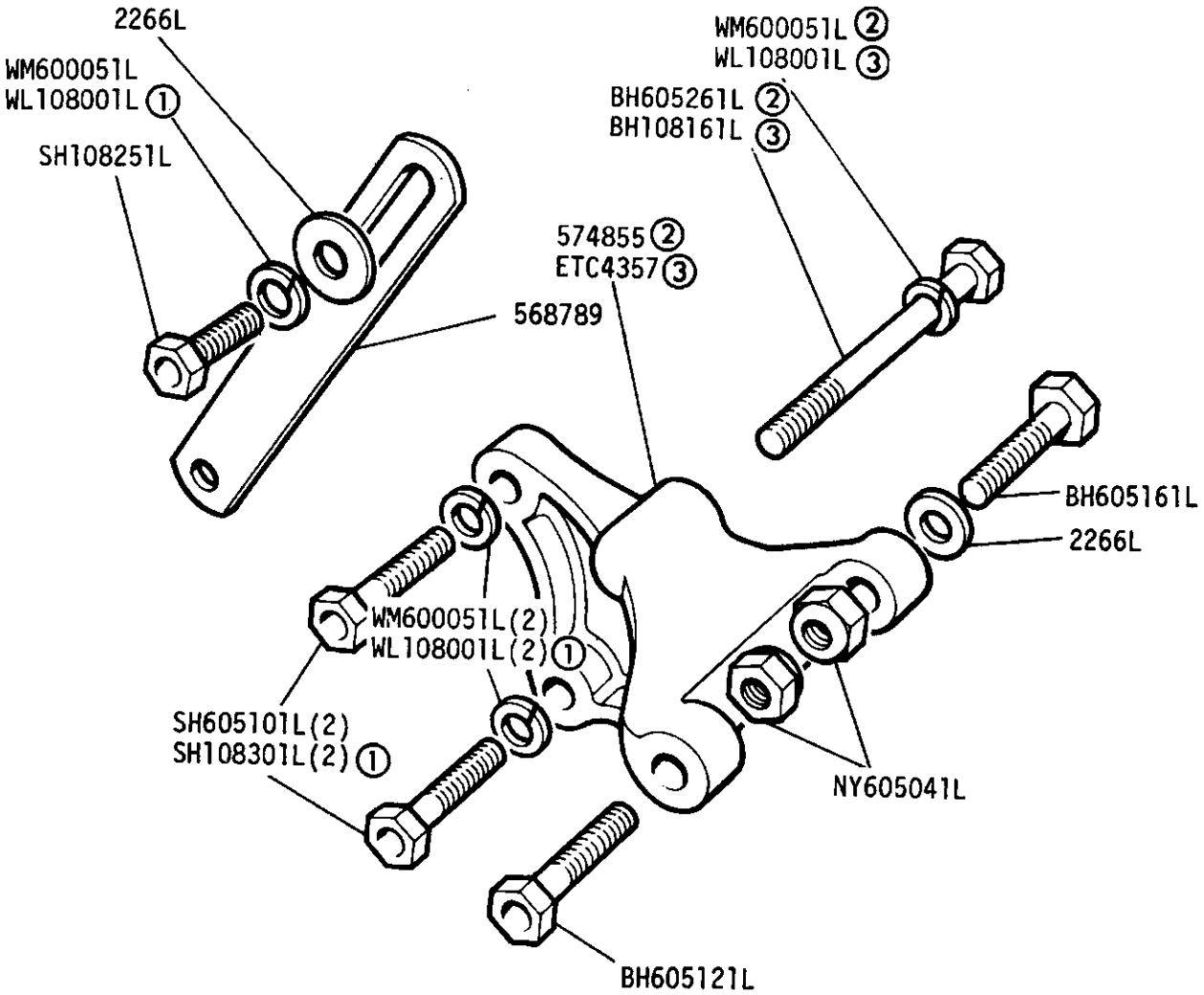

① From engine numbers 36123672B, 36407286B
② Engine prefix 901 and 904 and engines prefix 361 and 364 suffix A and B
③ Engines prefix 361 and 364 suffix 'C' onward

GROUP K
ENGINE - Alternator - 16 ACR 12 Volt 34 Amp Machine Sensed
2.6 Litre Petrol Engine Suffix 'A'

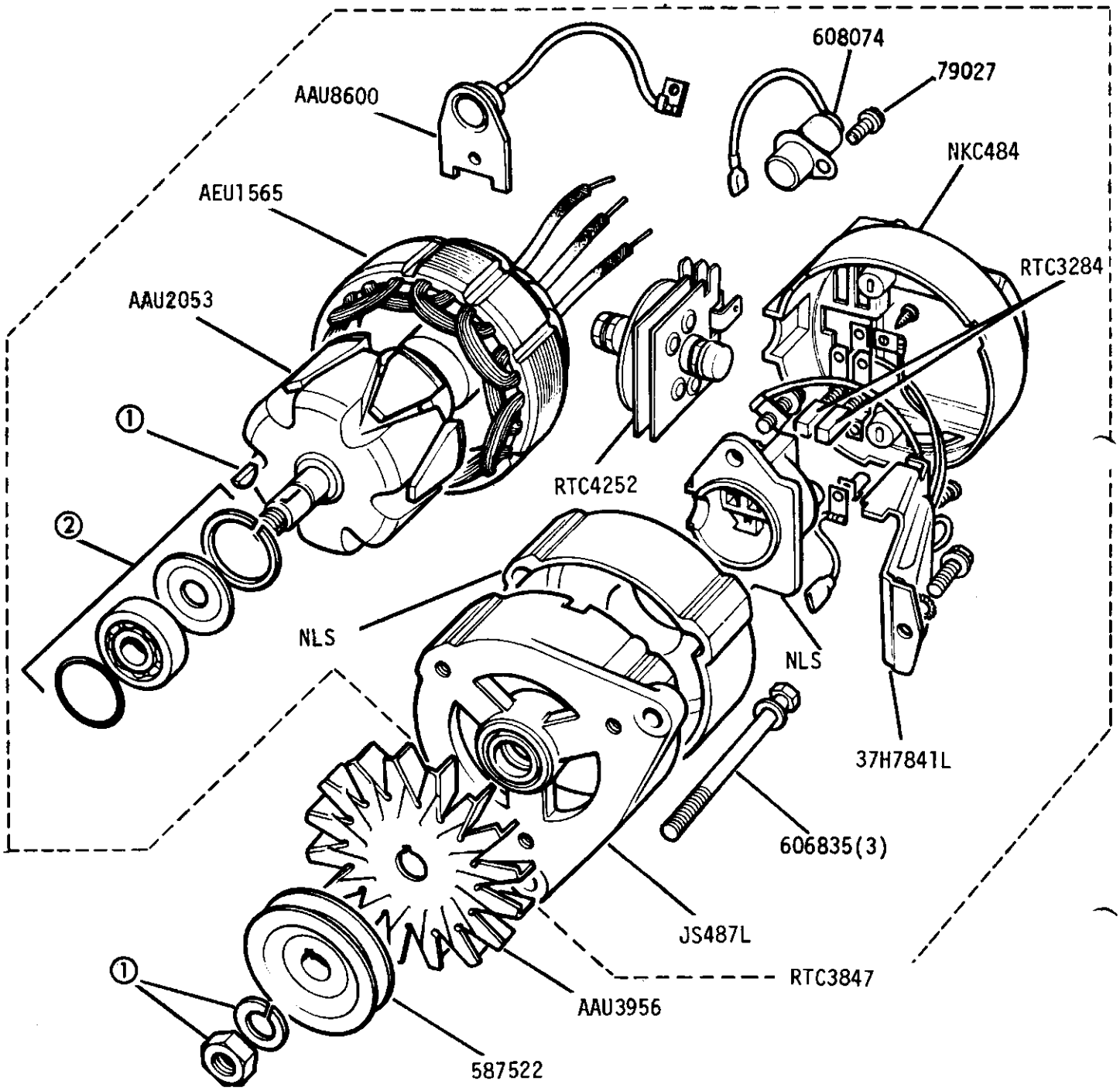

① Sundry Parts Kit JS495L

② Bearing Kits
Slip Ring End 18G8620L
Drive End 18G8619L 35mm
Drive End 518848 42mm
Alternatives

GROUP K
ENGINE - Alternator - 16 ACR 12 Volt 34 Amp Battery Sensed
2.6 Litre Petrol from Engine Suffix 'B' onwards

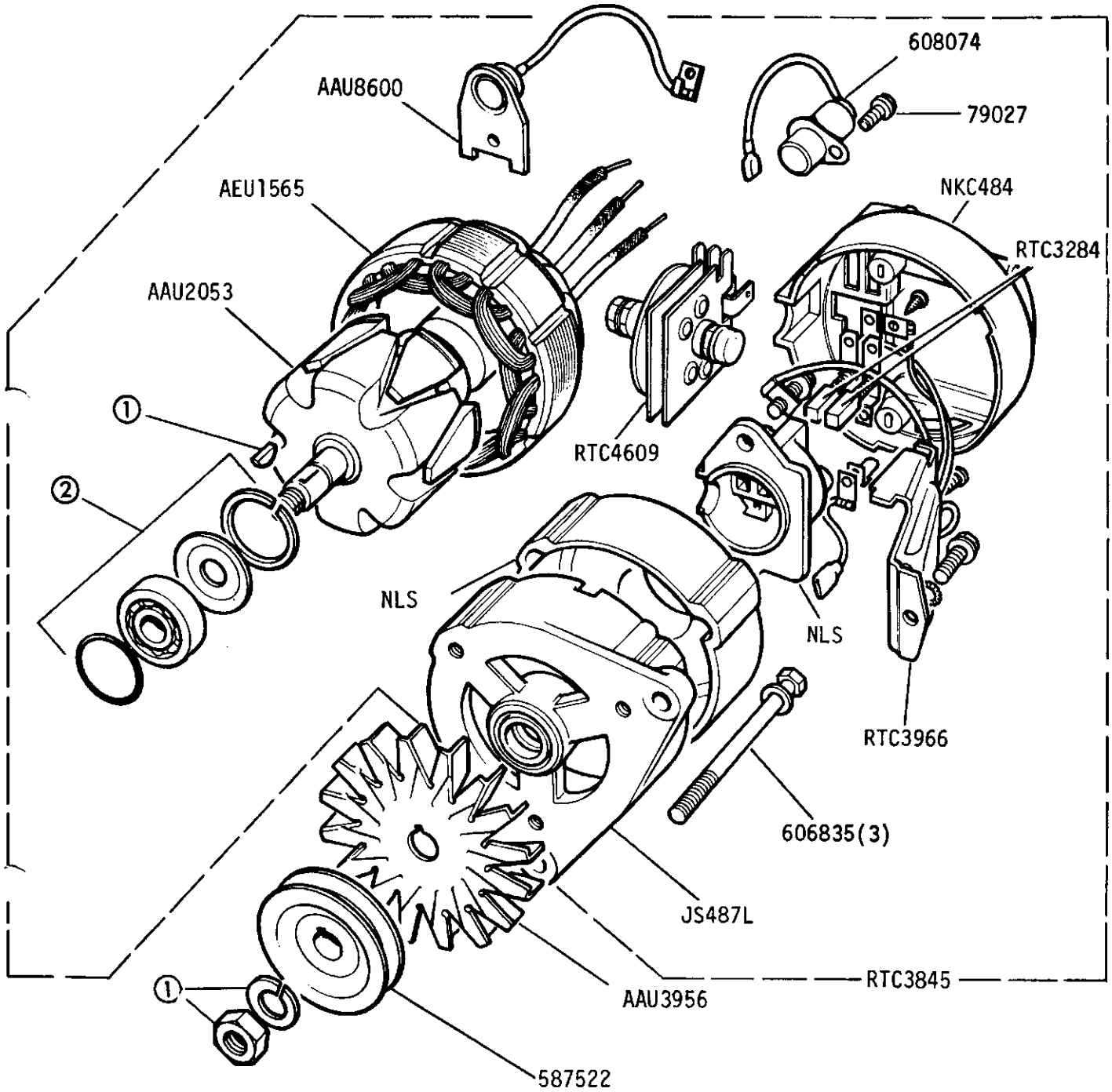

① Sundry Parts Kit JS495L
Bearing Kits:-
② Slip Ring End 18G8620L
Drive End 18G8619L

GROUP K
ENGINE - Alternator Mountings 2.6 Litre Petrol

Up to Engine Suffix 'B' inclusive

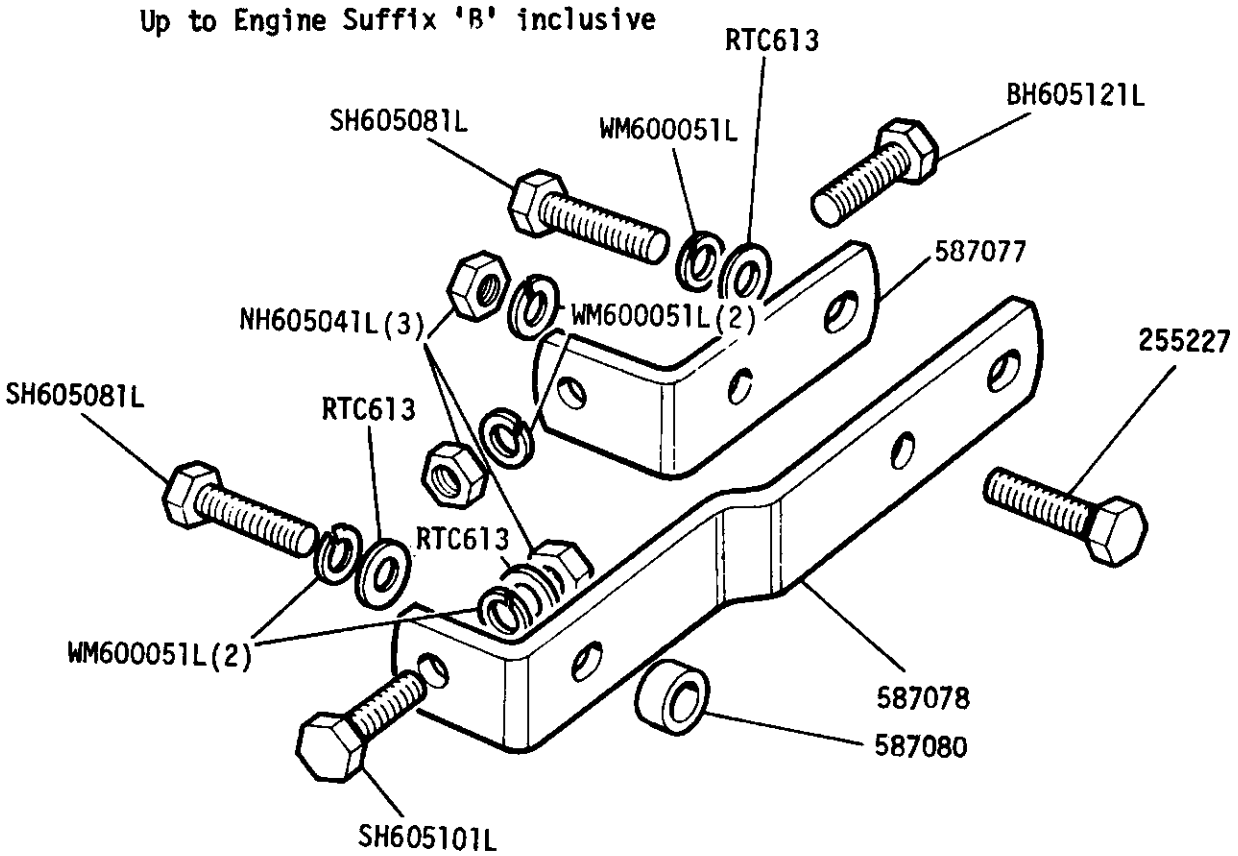

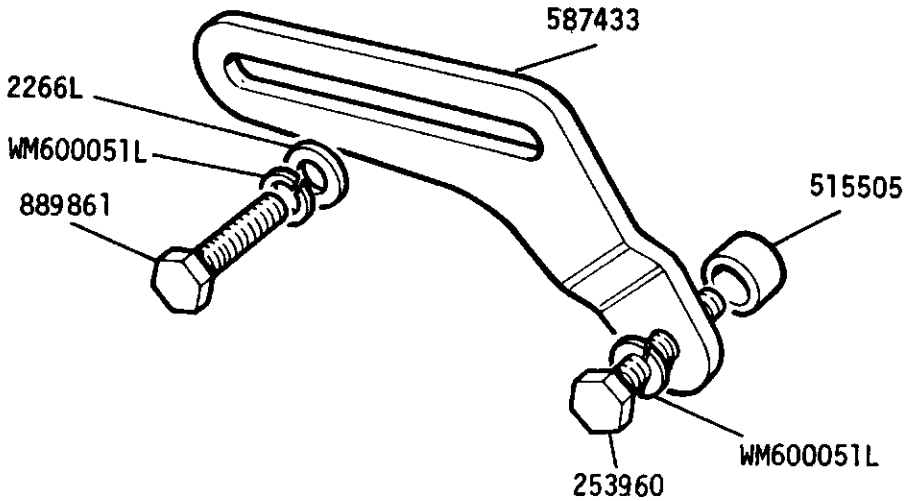

GROUP K

TOXED ENGINE - Alternator Mountings 2.6 Litre Petrol From Engine Suffix 'C' onwards

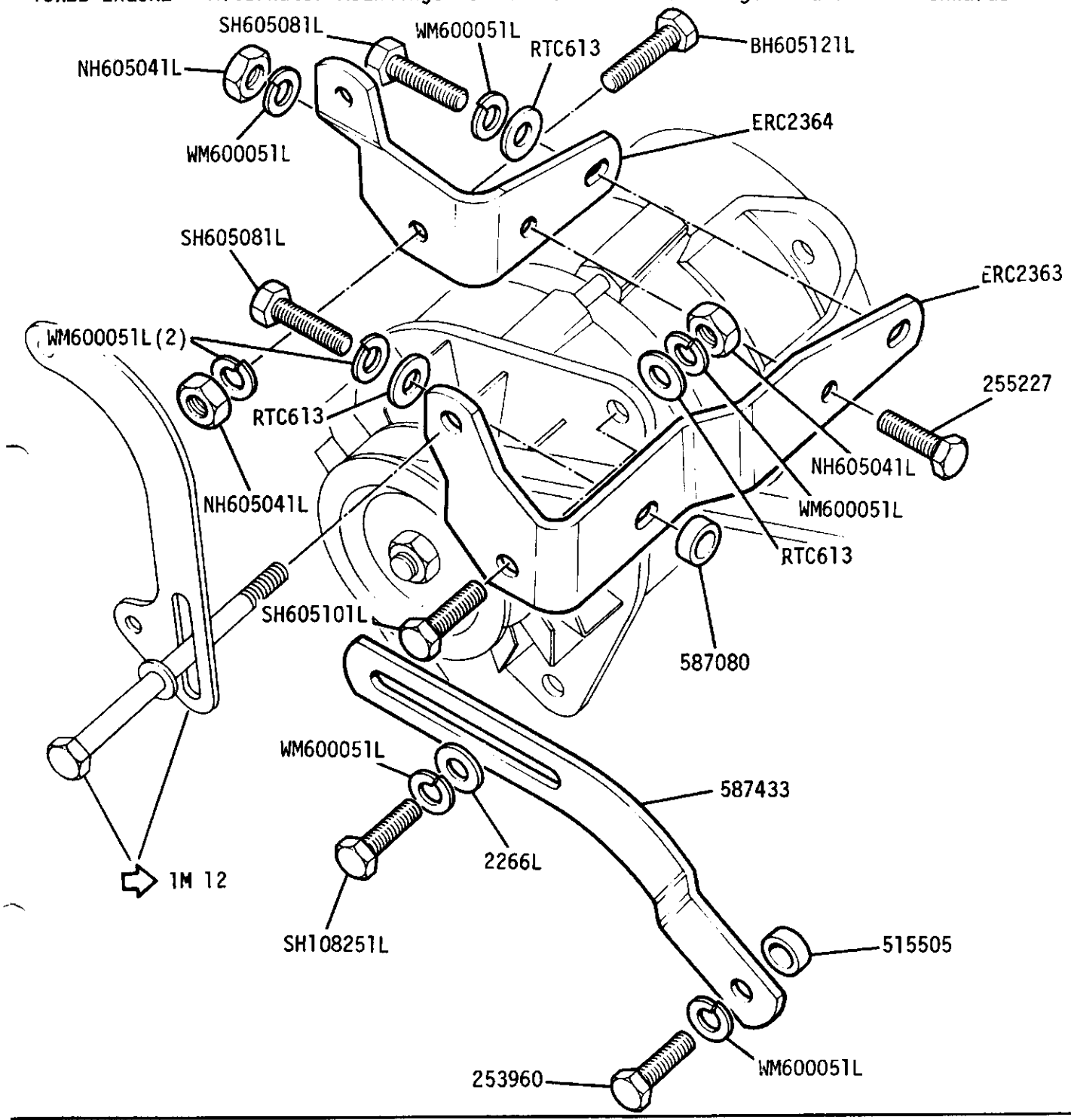

GROUP K
ENGINE - Alternator - 16 ACR 12 Volt 34 Amp Machine Sensed
2¼ Litre Diesel Engine Suffix 'A'

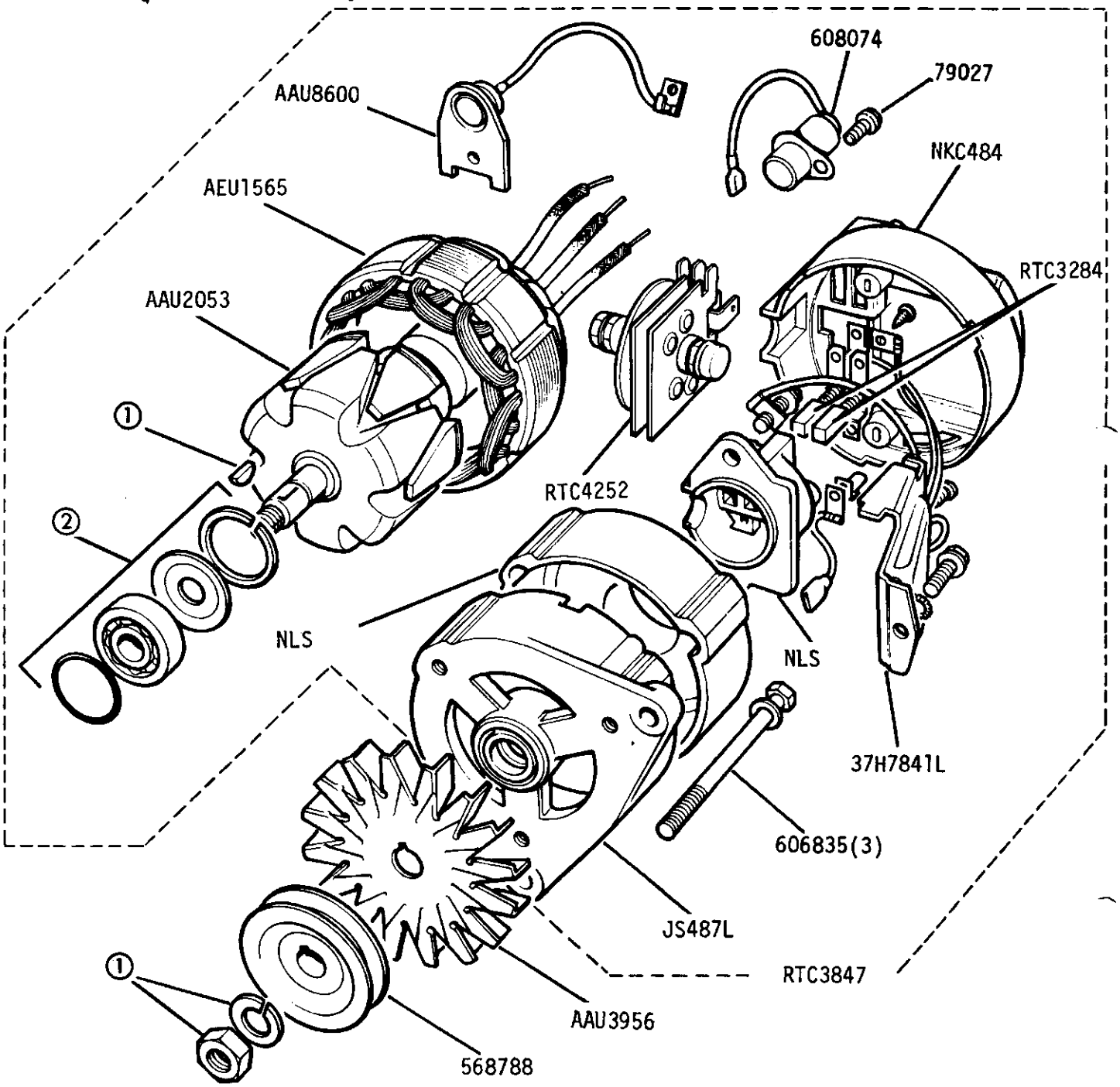

① Sundry Parts Kit JS495L

② Bearing Kits
Slip Ring End 18G8620L
Drive End 18G8619L 35mm
Drive End 518848 42mm
Alternatives

GROUP K

ENGINE - Alternator - 16ACR 12 Volt 34 Amp Battery Sensed 2¼ Litre Diesel

From Engine Suffix 'B' onwards

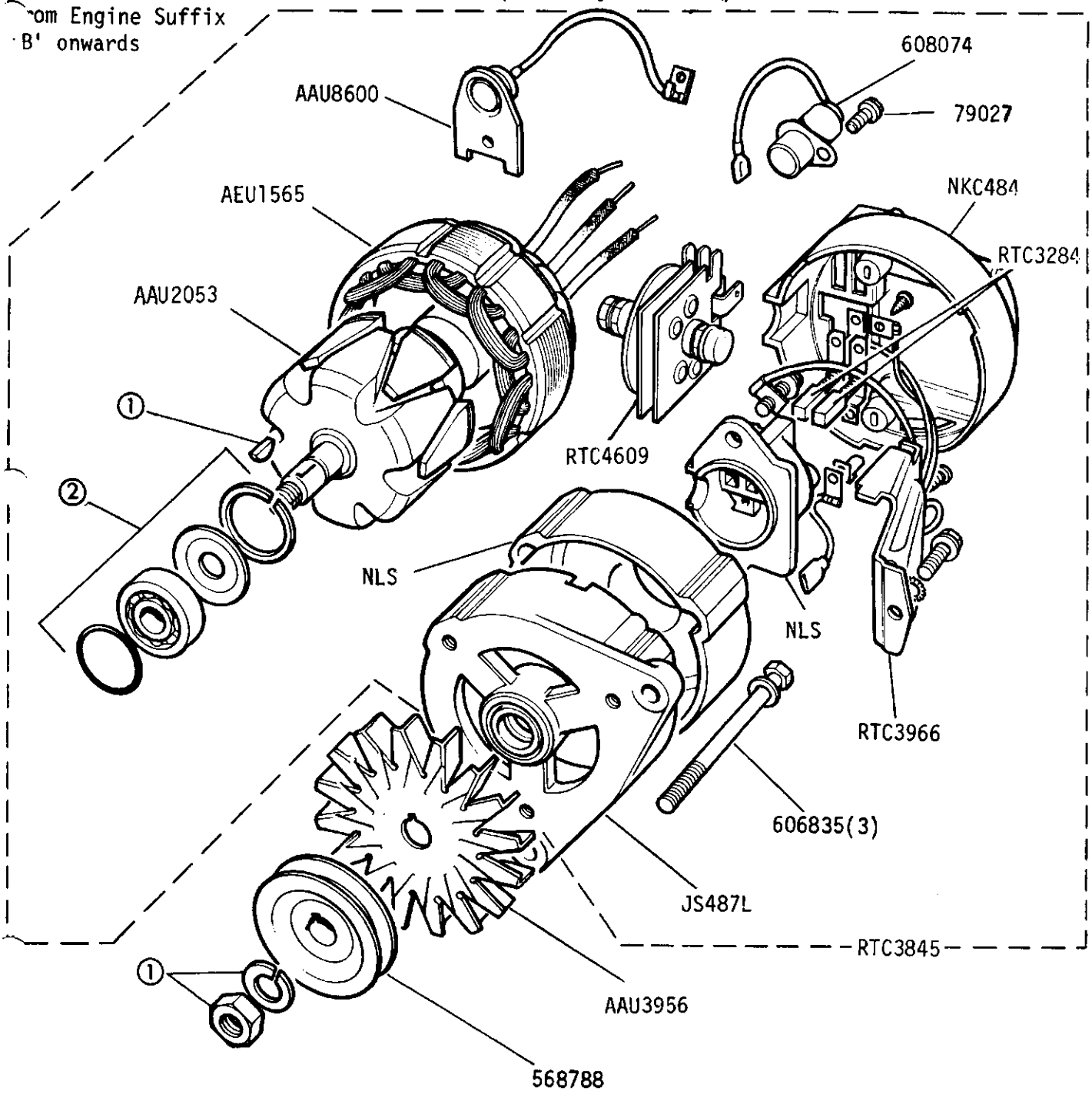

① Sundry Parts Kit JS495L

② Bearing Kits:-
Slip Ring End 18G8620L
Drive End 18G8619L

ENGINE - Alternator Fixings 2¼ Litre Diesel

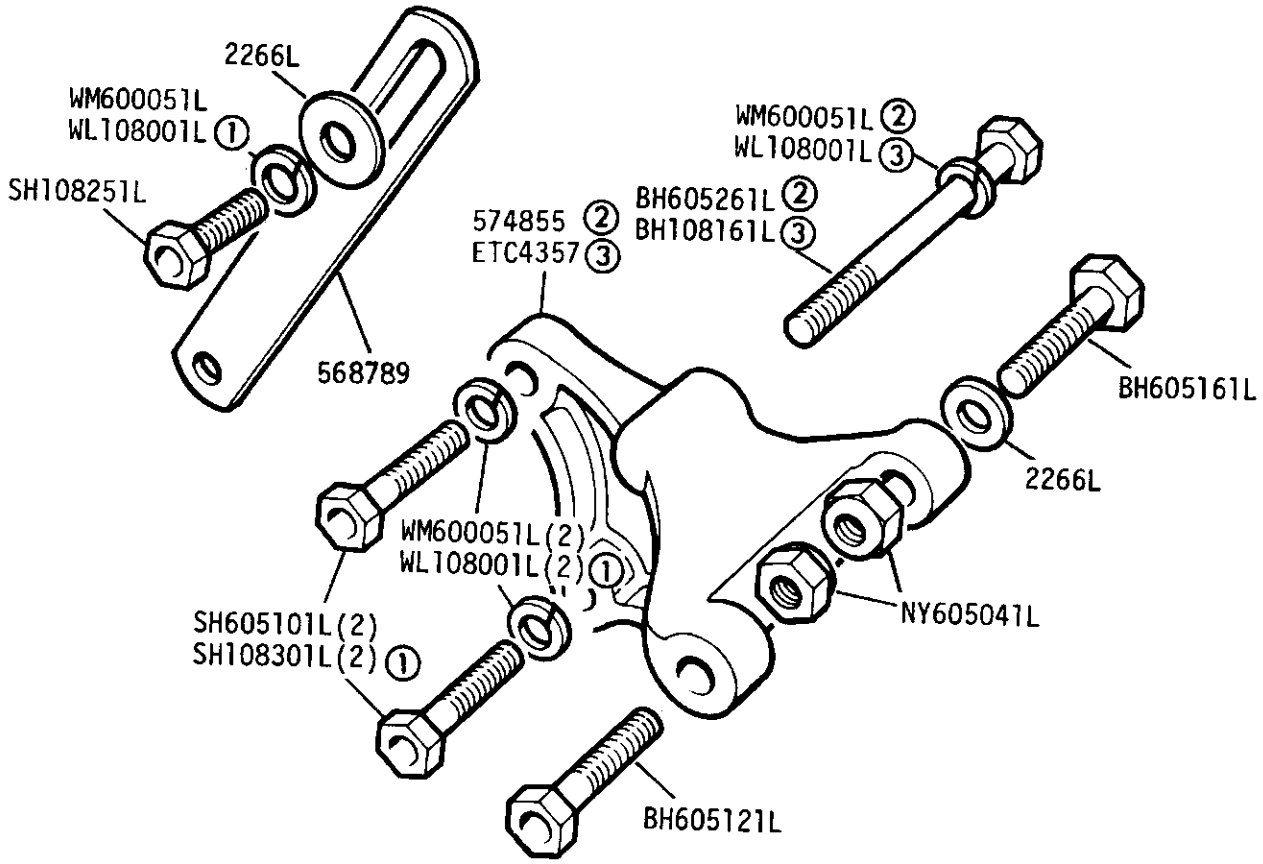

① From engine No.36619420B

② Engine prefix 906 and engine prefix 366 suffix A and B only

③ Engine prefix 366 suffix C only

GROUP K
ALTERNATOR - 18ACR, 12 Volt 40 Amp, Battery Sensed 109 V8

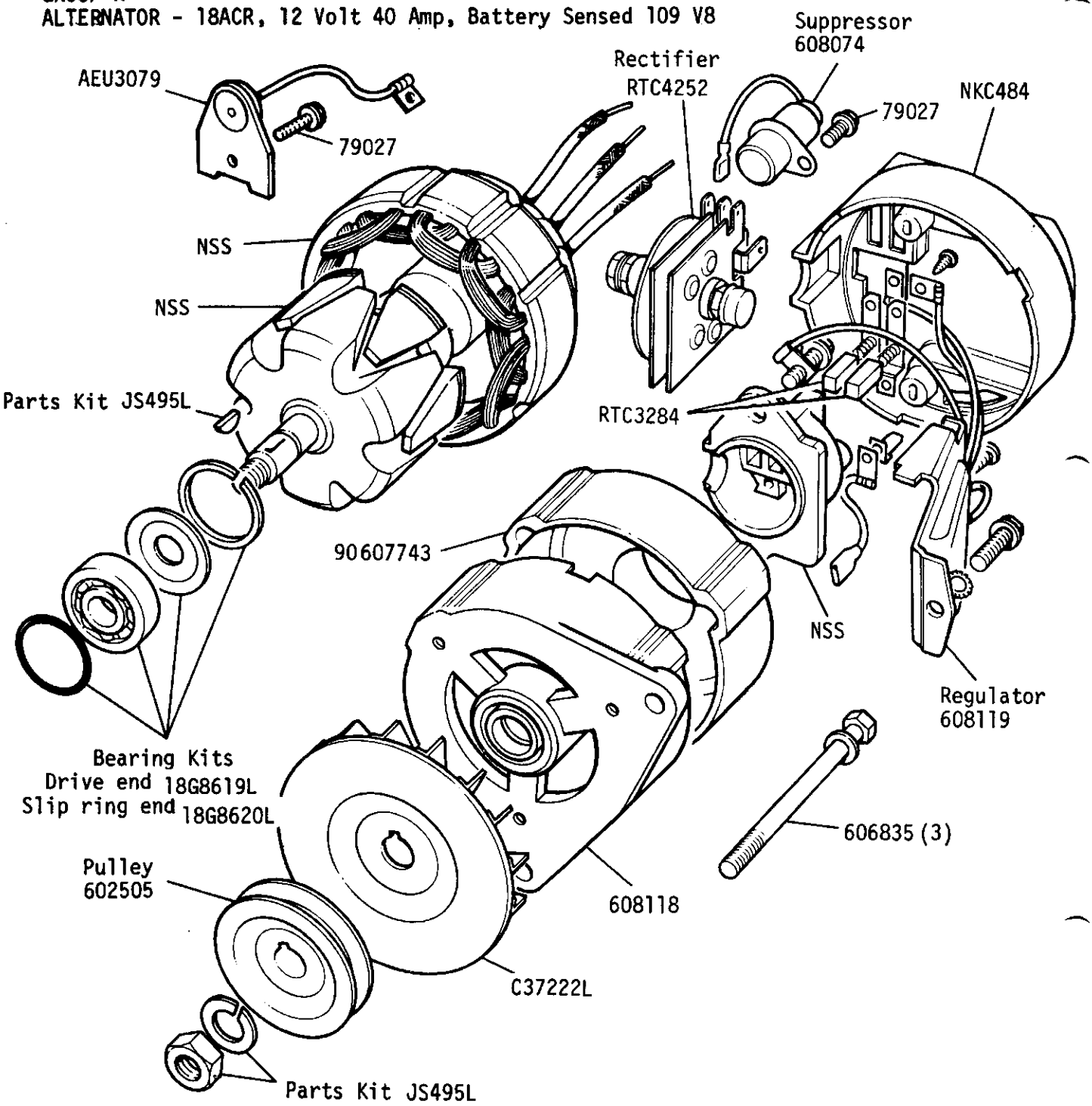

Alternator assembly RTC3851
Pulley and fan are not part of alternator assembly

ALTERNATOR - Brackets and Fixings 109 V8

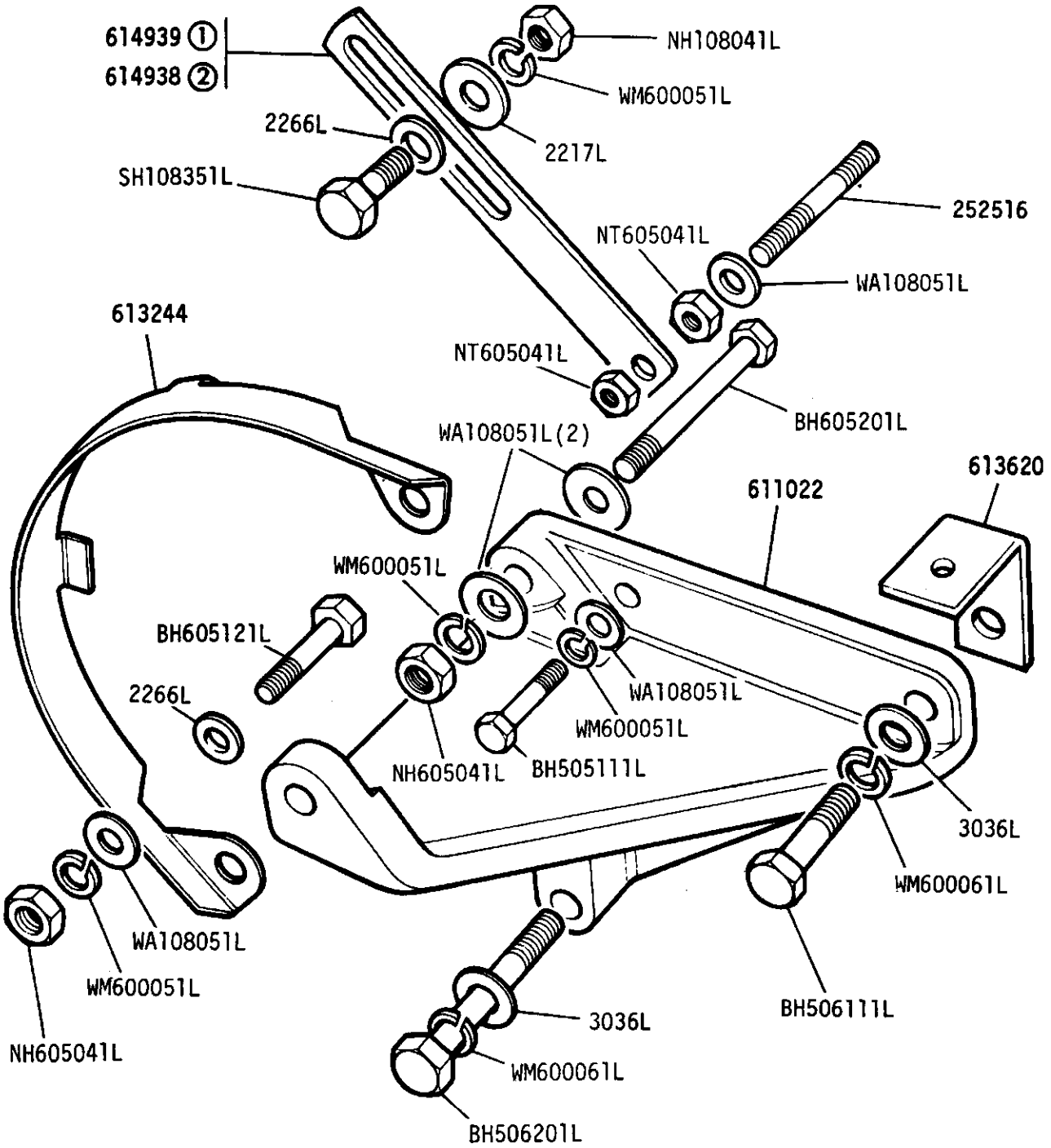

① Detoxed engine
② Non-detoxed engine

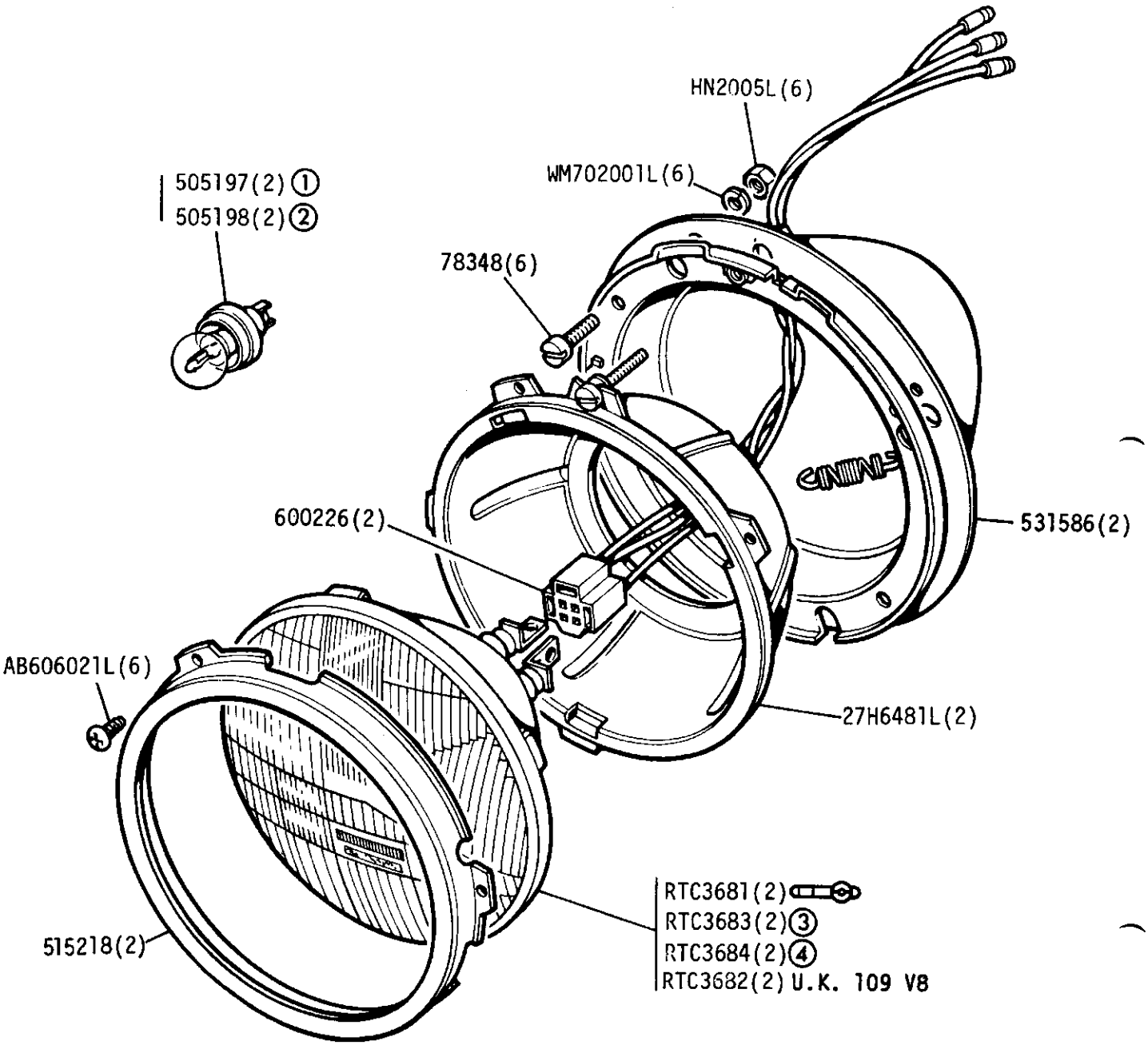

Headlamp Complete BHM7196L(2) 27H8207L(2) except Europe
AEU1061(2) Europe AEU1355(2) U.K. 109 V8 AEU1061(2) LH Stg 109 V8

① Italy ③ except Europe
② France ④ Europe

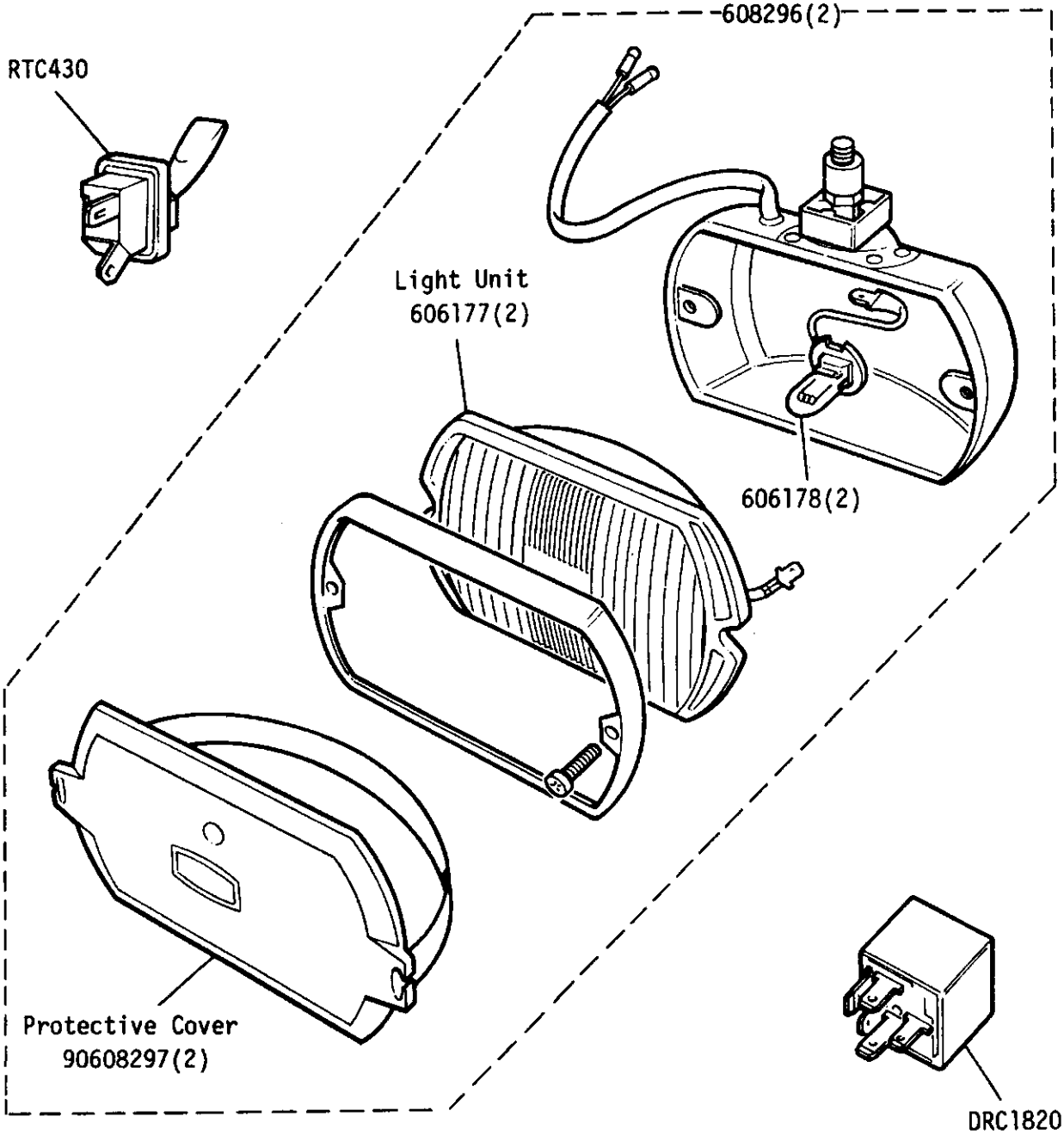

① 4 Cylinder	Nameplate, "Auxiliary Main Beam" - PRC3760 ①②
② 109V8	Harness Assembly, Auxiliary Lamps - PRC3753 ①②
	Cable Assembly, LH Lamp - PRC3755 ①
	Cable Assembly, RH Lamp - PRC3754 ①
	Cable Assembly, Auxiliary Lamps - PRC3754(2) ②
	Lead, Junction to LH Lamp - PRC3727 ②
	Bullet Connector - 536937 ①②

GROUP K
ELECTRICAL - Stop/Tail and Side Lamps

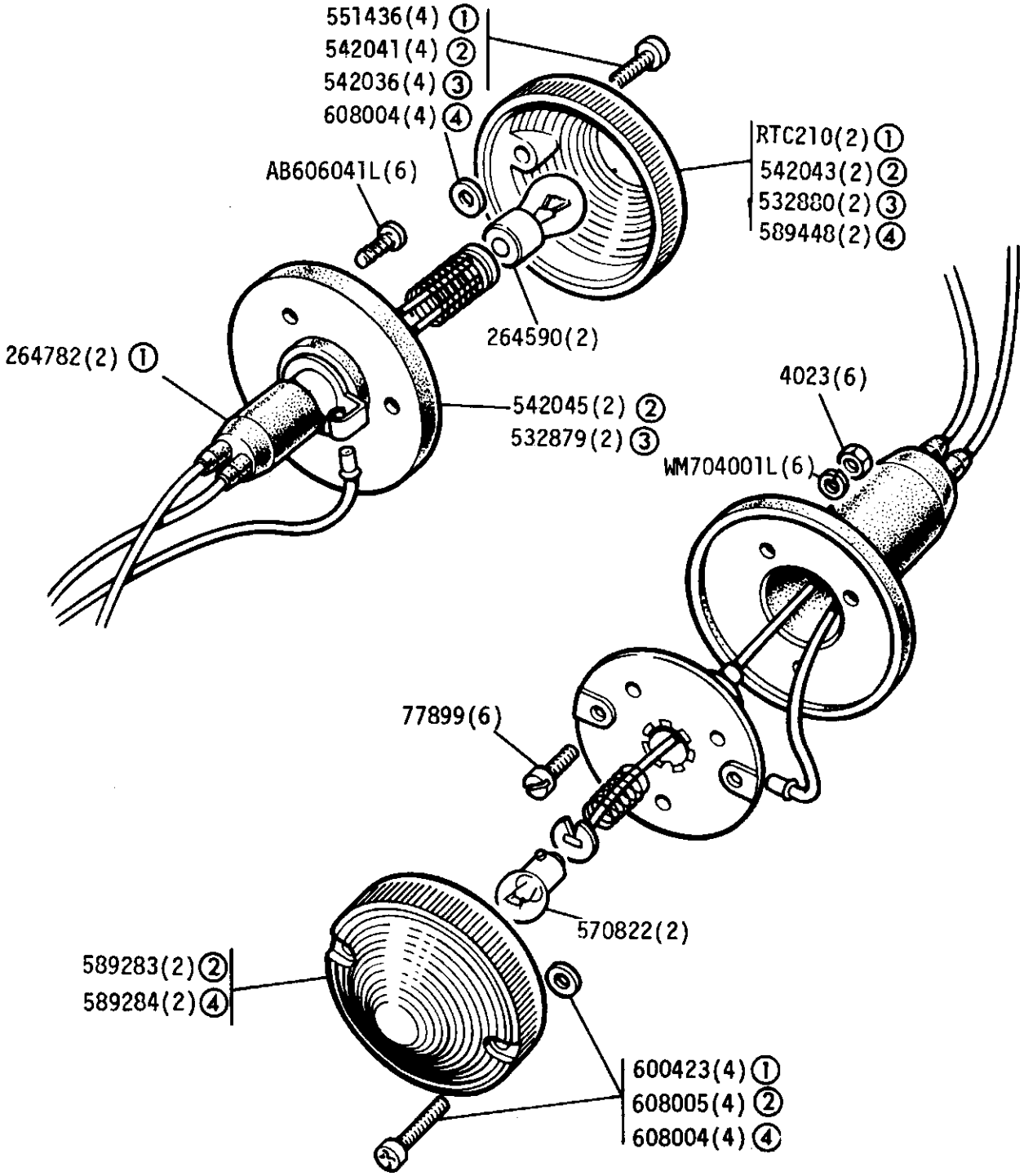

Stop tail lamp complete 531684(2)②⑥ 532881(2)③⑤ 589446(2)④⑥ 589812(2)①⑦
Side lamp complete 589403(2)② 589404(2)④

① Lucas
② Wipac
③ Sparto
④ L.E Perei
Alternatives

⑤ Up to December 1972
⑥ Up to August 1973 Home Market Only
⑦ France only

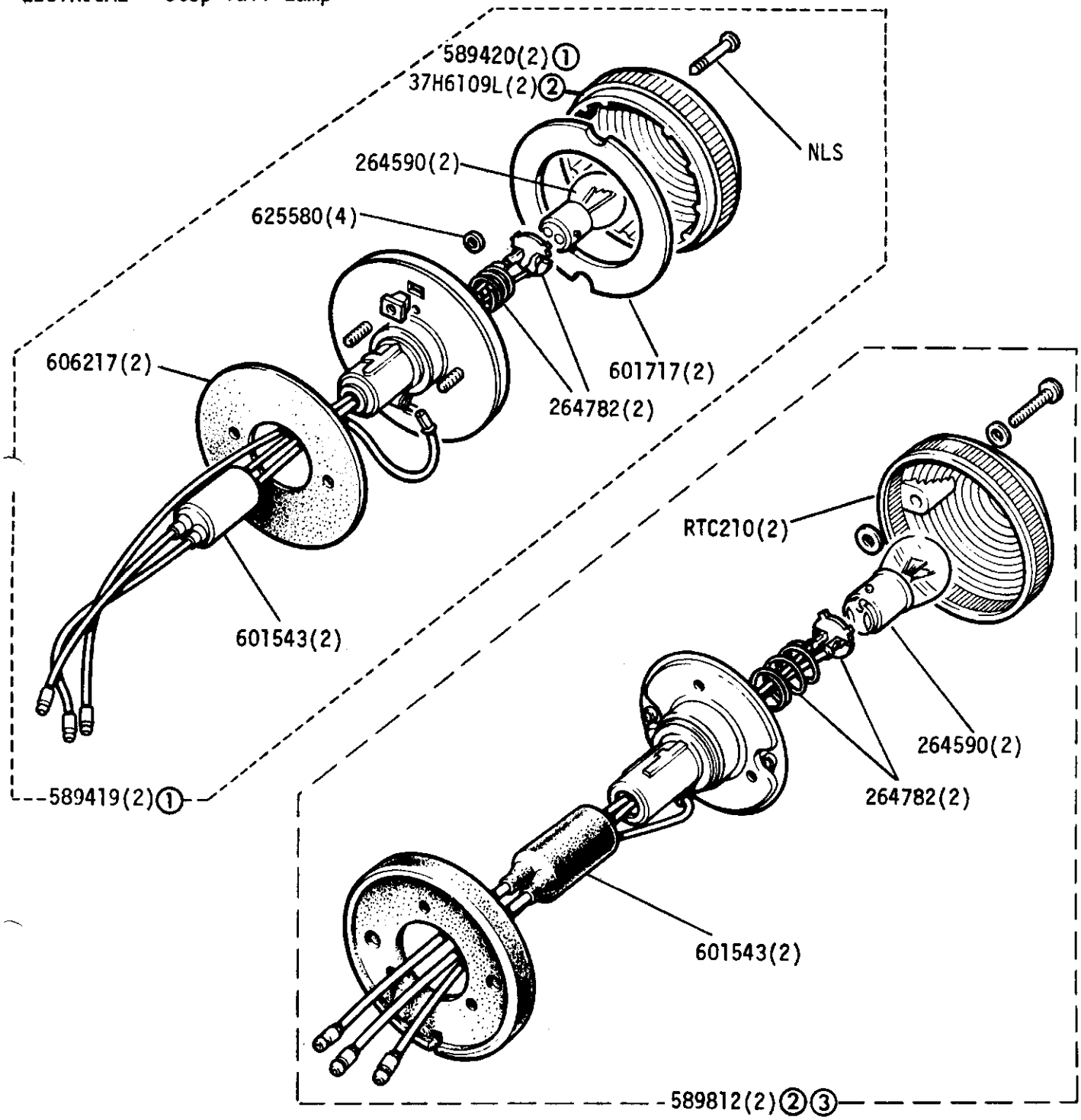

From September 1973 onwards

① L.E.Perei
② Lucas
③ H.C.P.U.

Alternatives

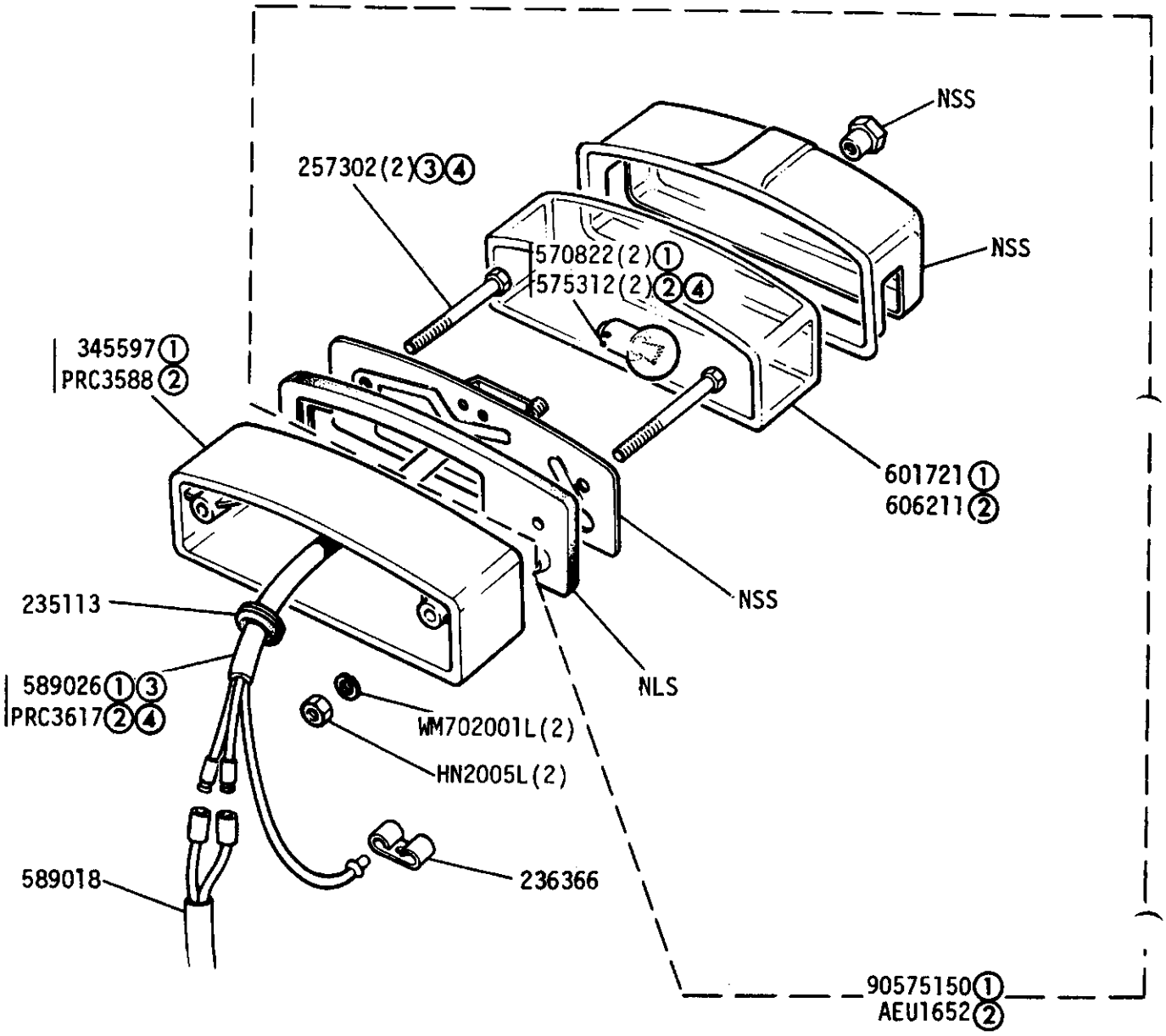

①Except H.C.P.U.
②H.C.P.U.
③Not Part Of 90575150
④Not Part Of AEU1652

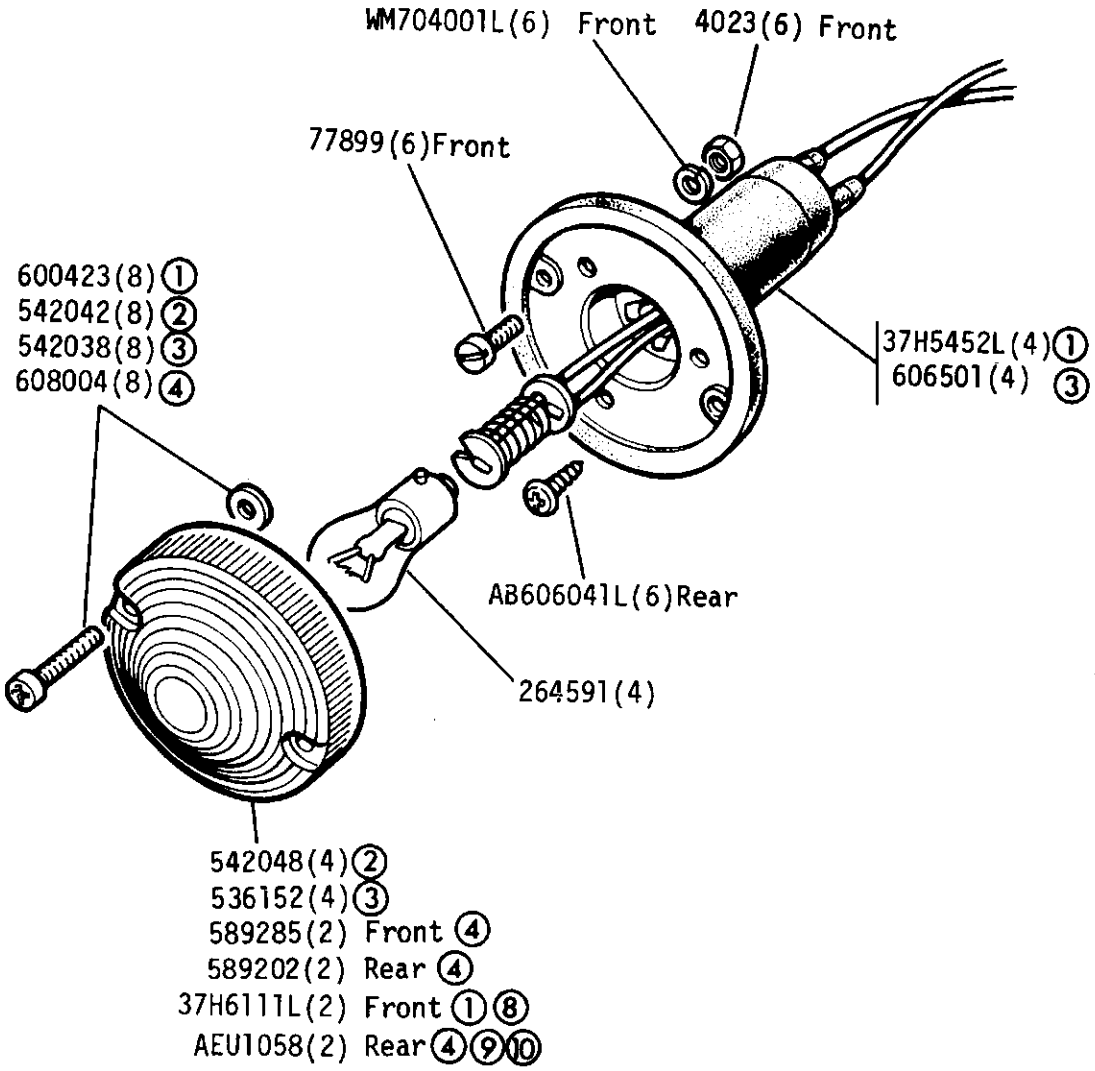

Flasher lamp complete 575123(4) ② ⑤ 575125(4) ③ ⑤ 589409(2) Front ④ ⑥
589414(2) Rear ④ ⑥ PRC39(2) Rear ④ ⑦ 575457(2) Front ① ⑧ PRC2774(2) Rear ④ ⑨ ⑩

① Lucas
② Wipac
③ Sparto
④ L.E. Perei

⑤ Up to December 1972
⑥ From January 1973 To Jan 1981
⑦ Australia only from January 1974 onwards
⑧ Optional
⑨ From February 1981 Onwards
⑩ H.C.P.U.

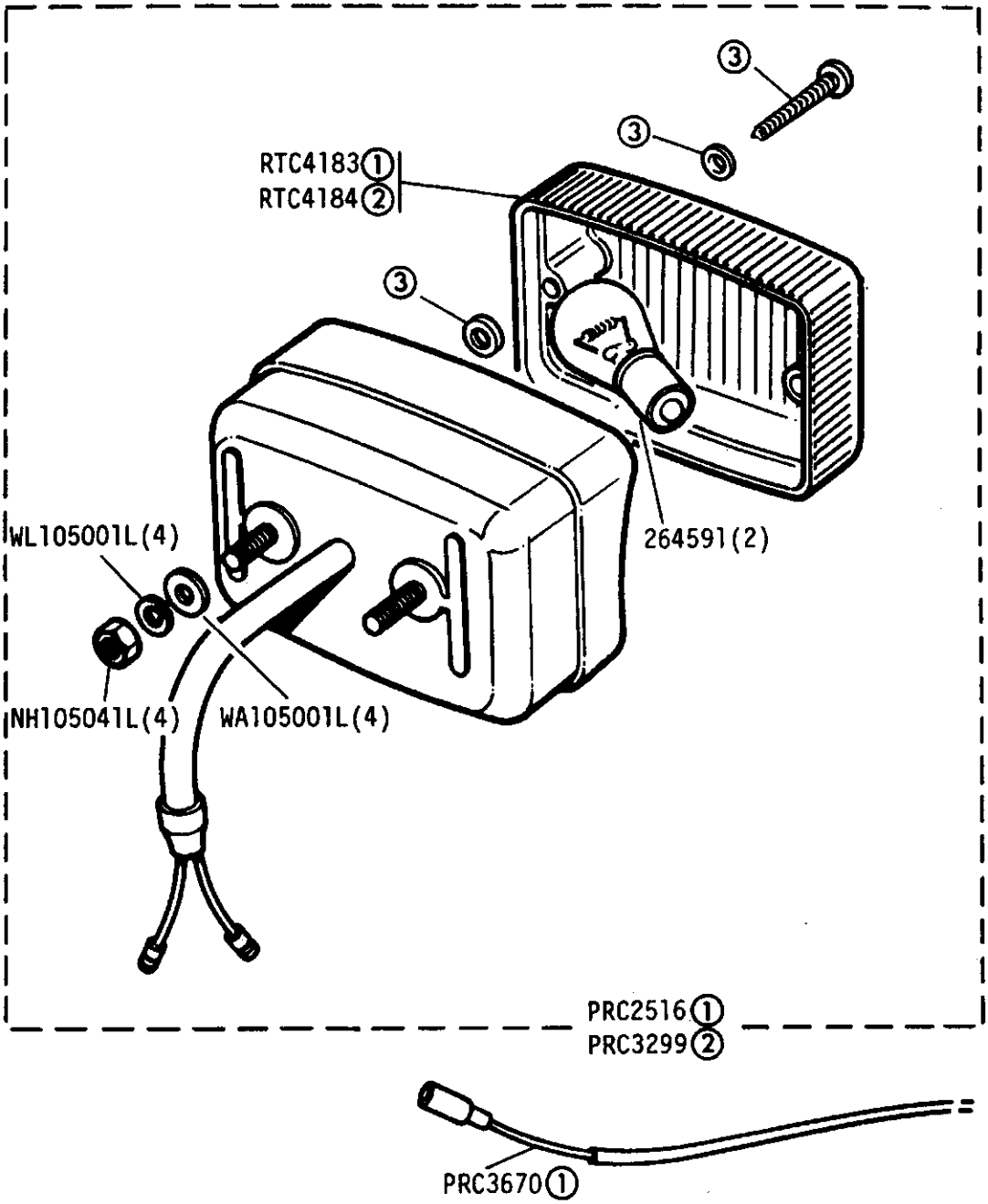

①Fog Lamp
②Reverse Lamp
③Part of Screw kit RTC4185

Switch, rear Fog Lamp - PRC2627

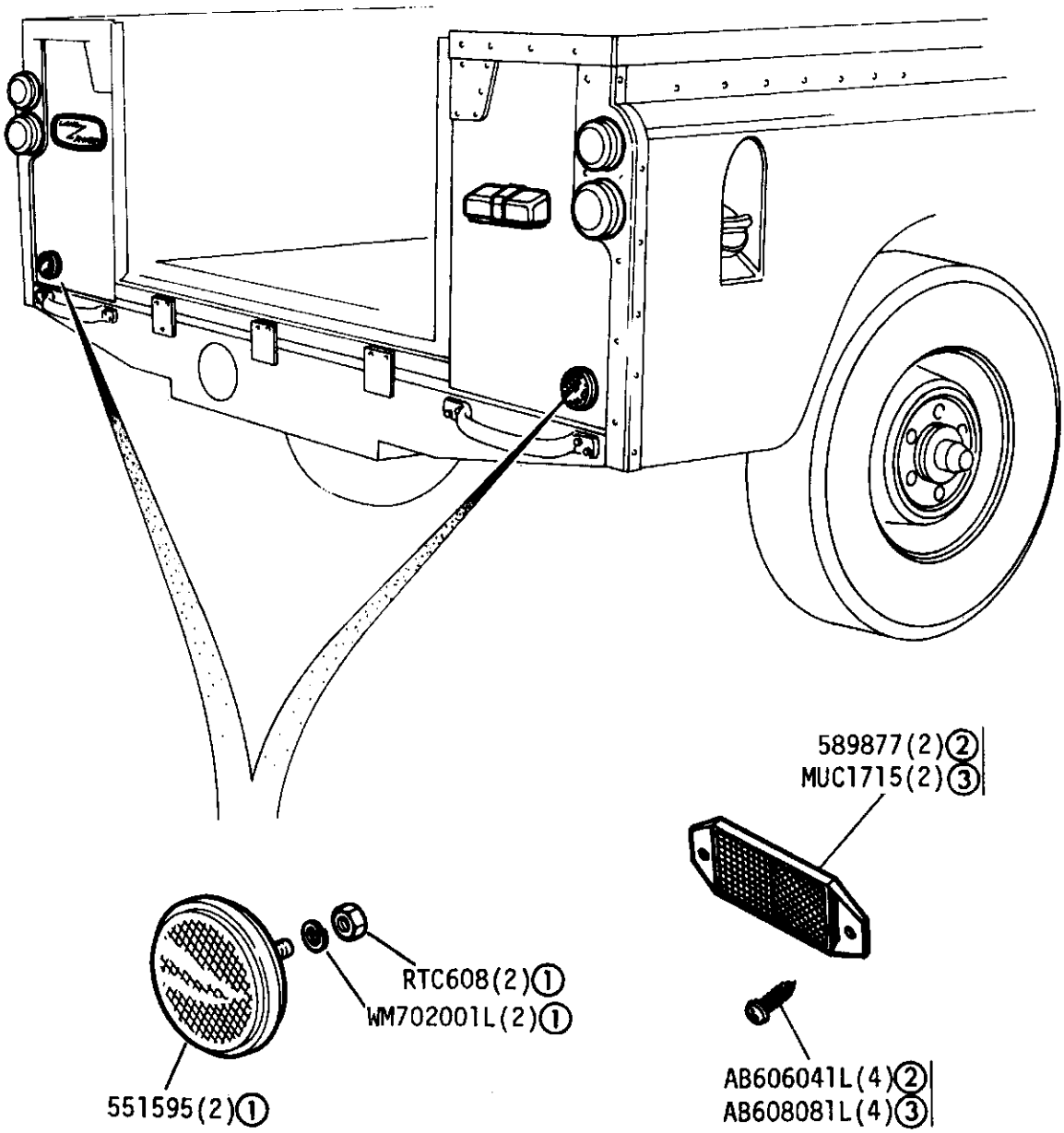

①Except H.C.P.U. upto August 1984
②H.C.P.U. only, upto August 1984
③All vehicles from September 1984

GROUP K

ELECTRICAL - Roof Lamp - Station Wagon.

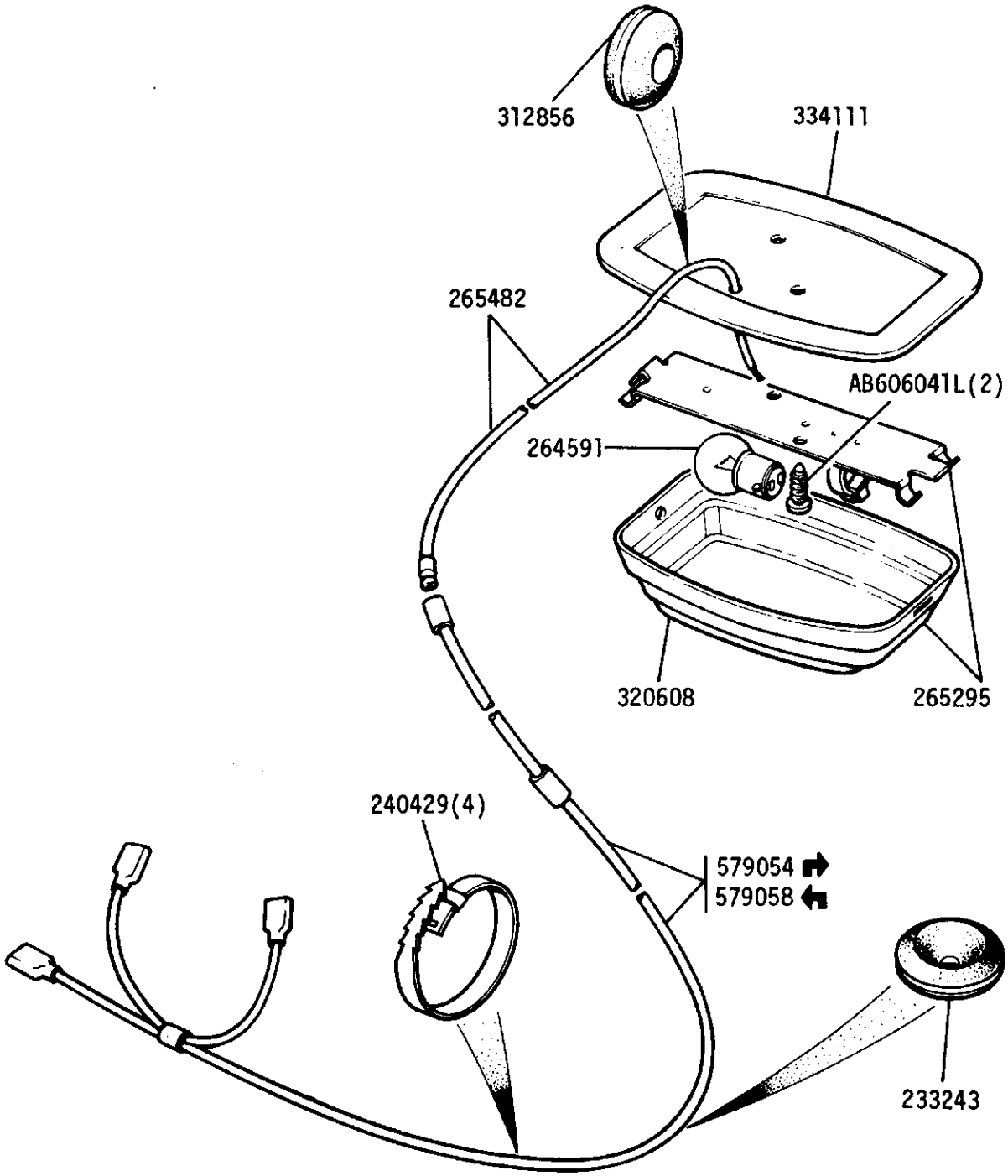

See frame 2I 03 for Interior Mirror.

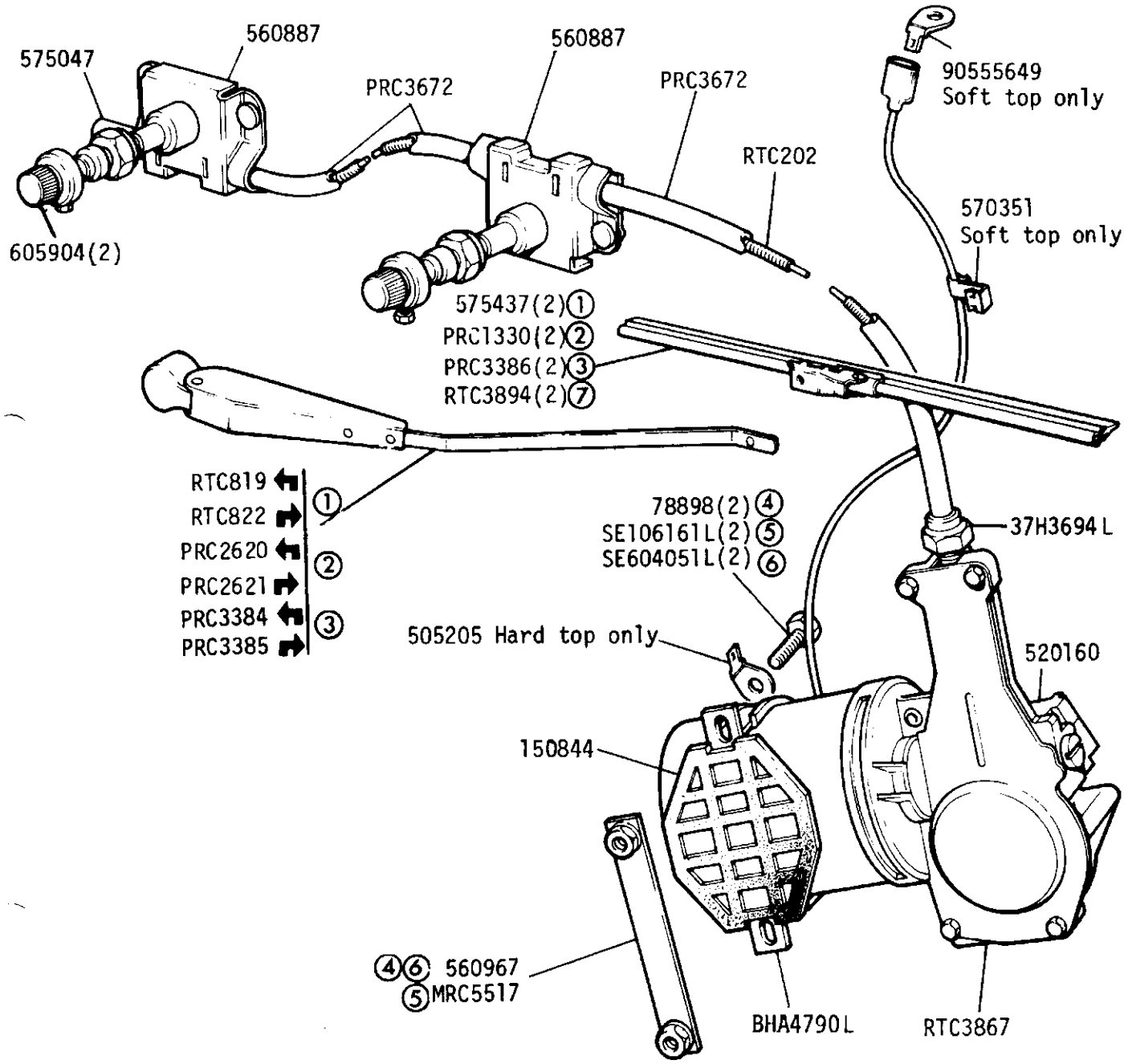

Shaft and gear for wiper motor 37H2736L

① Natural finish
② Matt black finish
③ With 20° crank
④ Except 109 V8

Alternatives
Check before ordering

⑤ 109 V8 Regular
⑥ 109 V8 Station Wagon
⑦ 10" Black - (Spring type)

Brush kit for Wiper Motor - RTC198

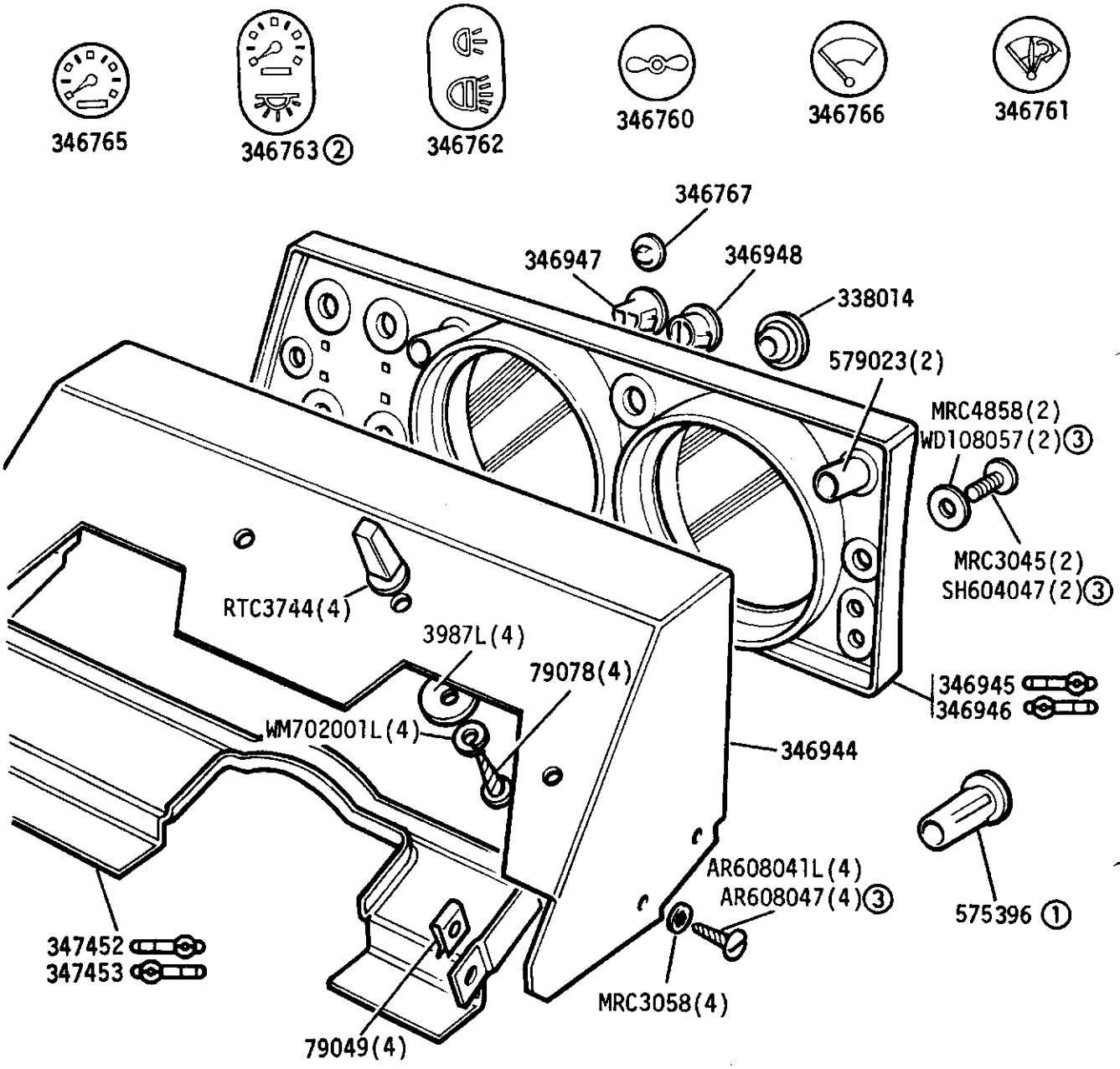

① Blue warning light Diesel
② Station Wagon only
③ Alternative fixings.

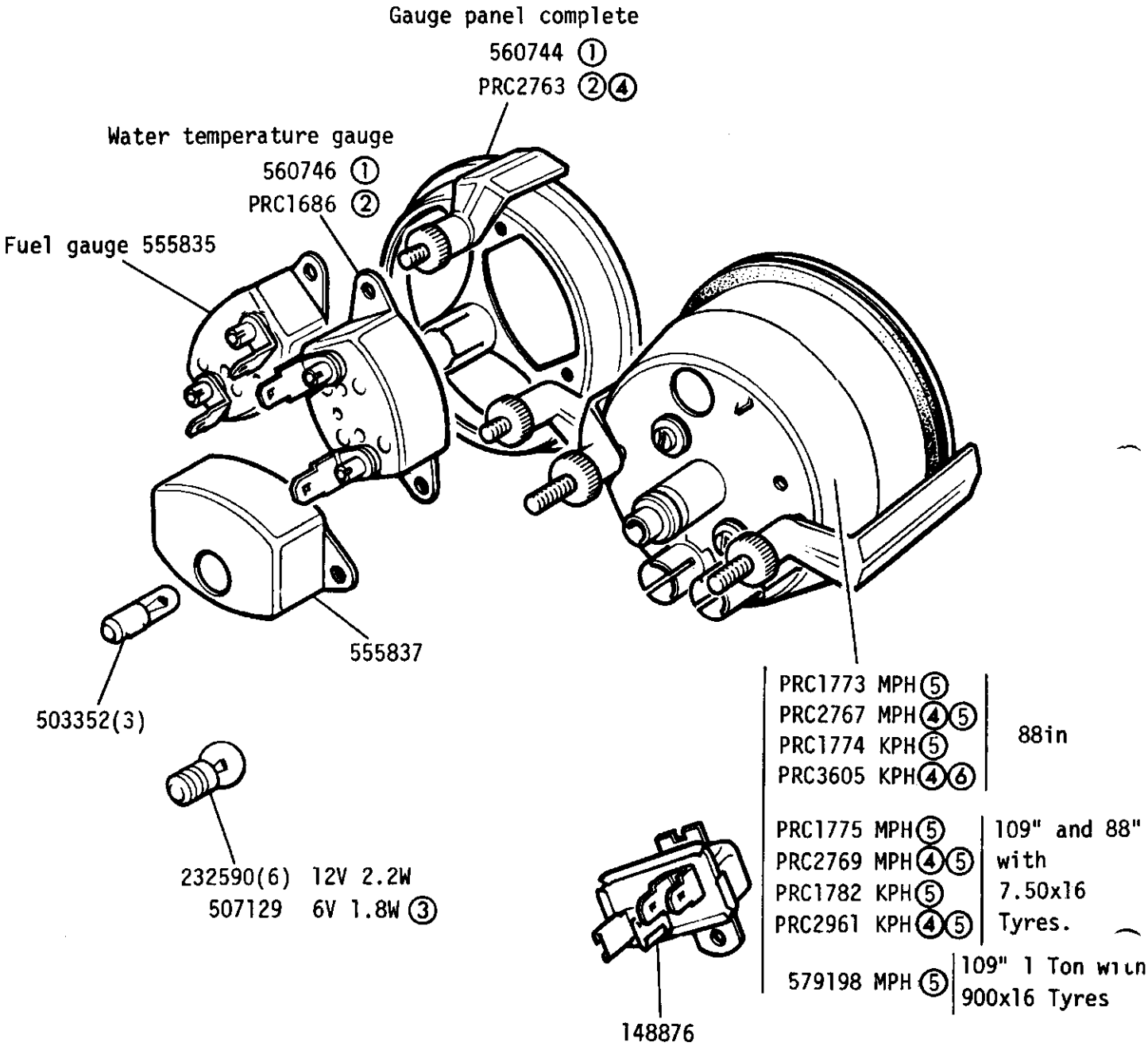

① Except 109 V8
② 109 V8
③ Diesel models - for heater plug warning light
④ Green Illumination
⑤ With Trip
⑥ Without Trip

Plug, redundant hole :- 338014
(For use with PRC3605)

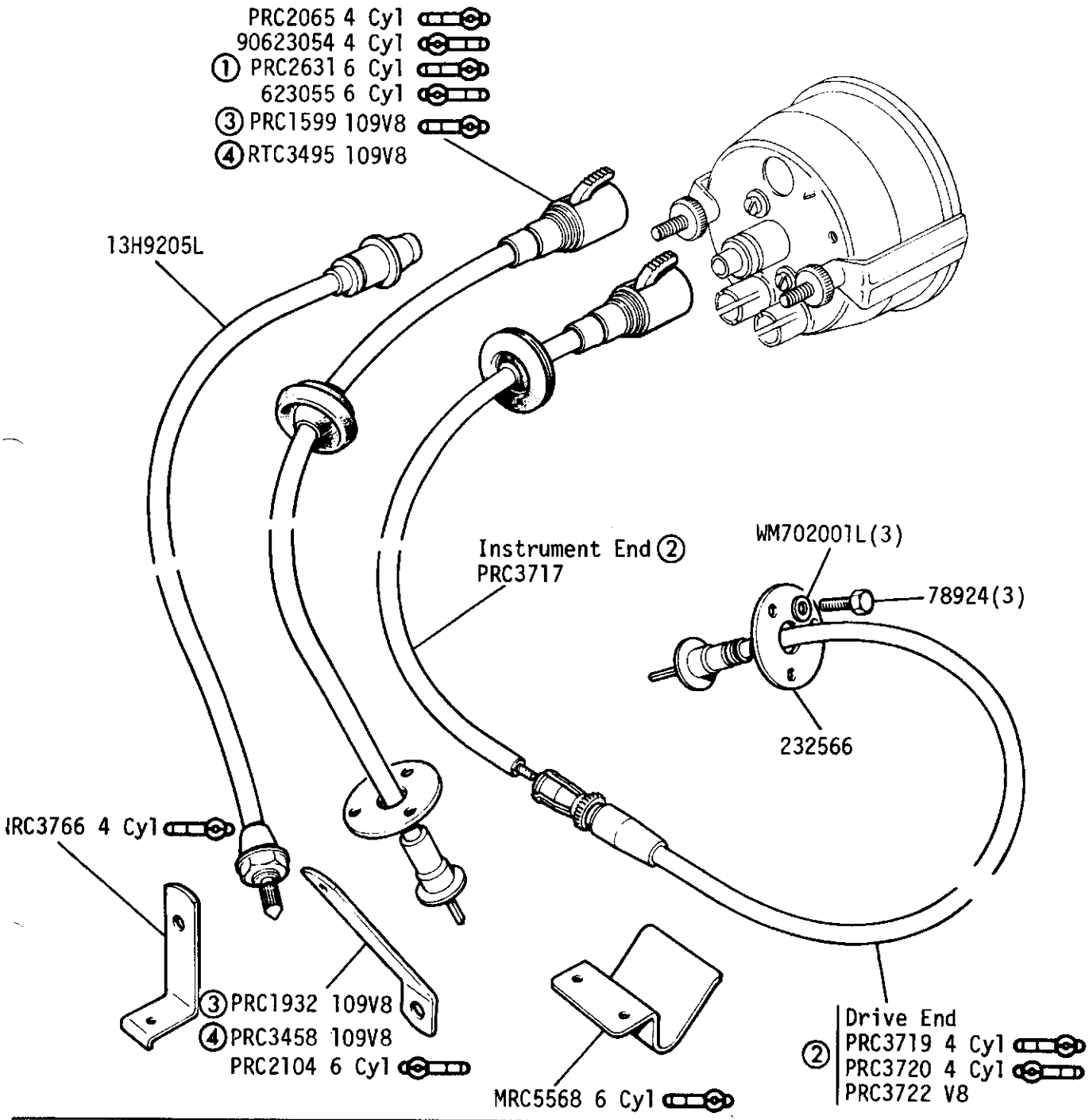

① One piece speedometer drive cable

② Two piece speedometer drive cable

③ 109V8 Detoxed upto vehicle 158451 (January 1982)

④ All 109V8 from vehicle 158452

Double Clip, Speedometer Cable and Fuel Spill Pipe :- PRC3595(2)

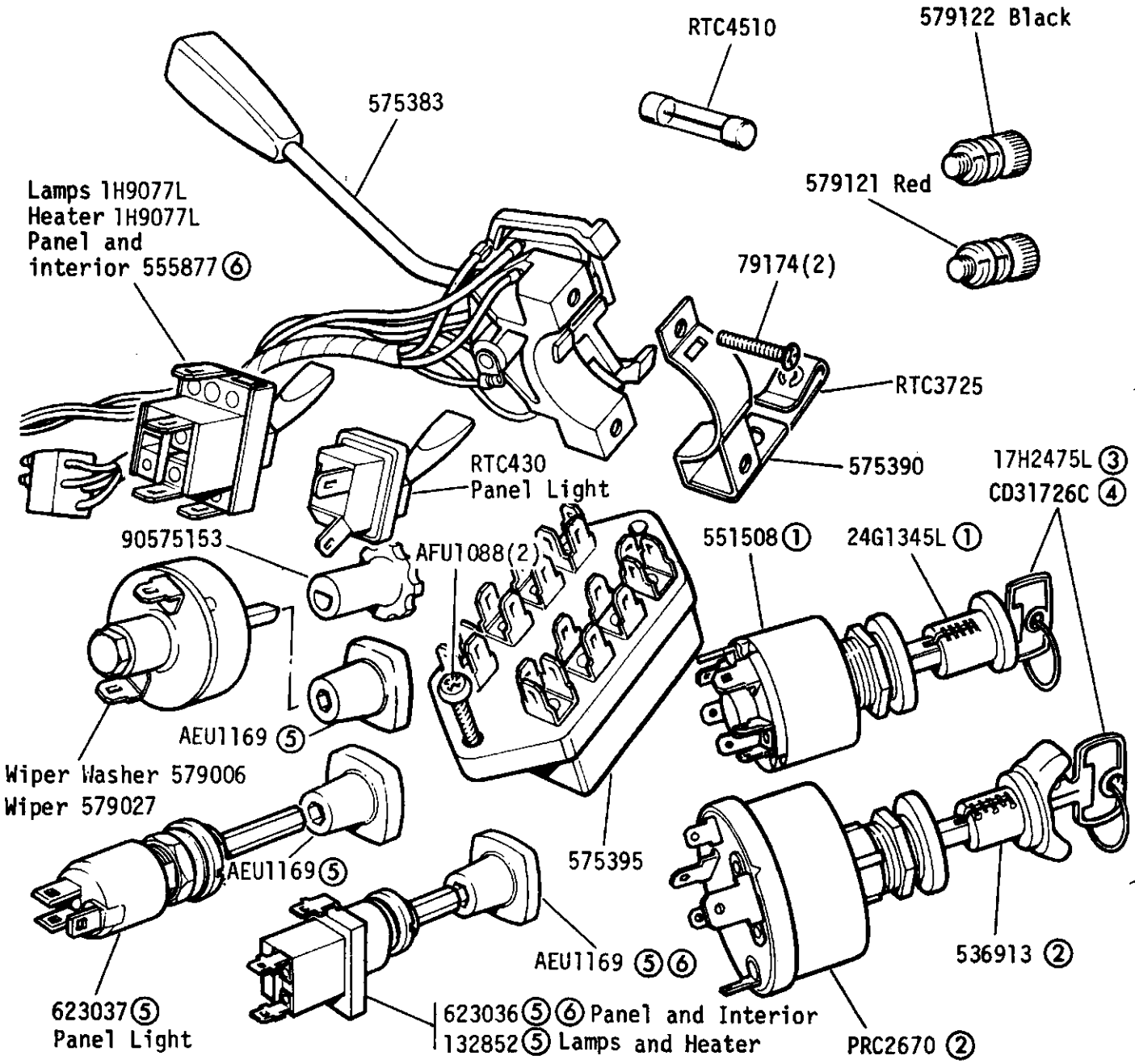

① Petrol models
② Diesel models
③ Blank
④ Cut
⑤ Germany
⑥ Station Wagon

Ballast resistor 109 V8 134176
Relay for starter motor 109 V8 589665
Ignition switch cover 109 V8 PRC2966

Label Interior Lamp Switch -MRC8172
Switch, rear Fog Lamp - PRC2627

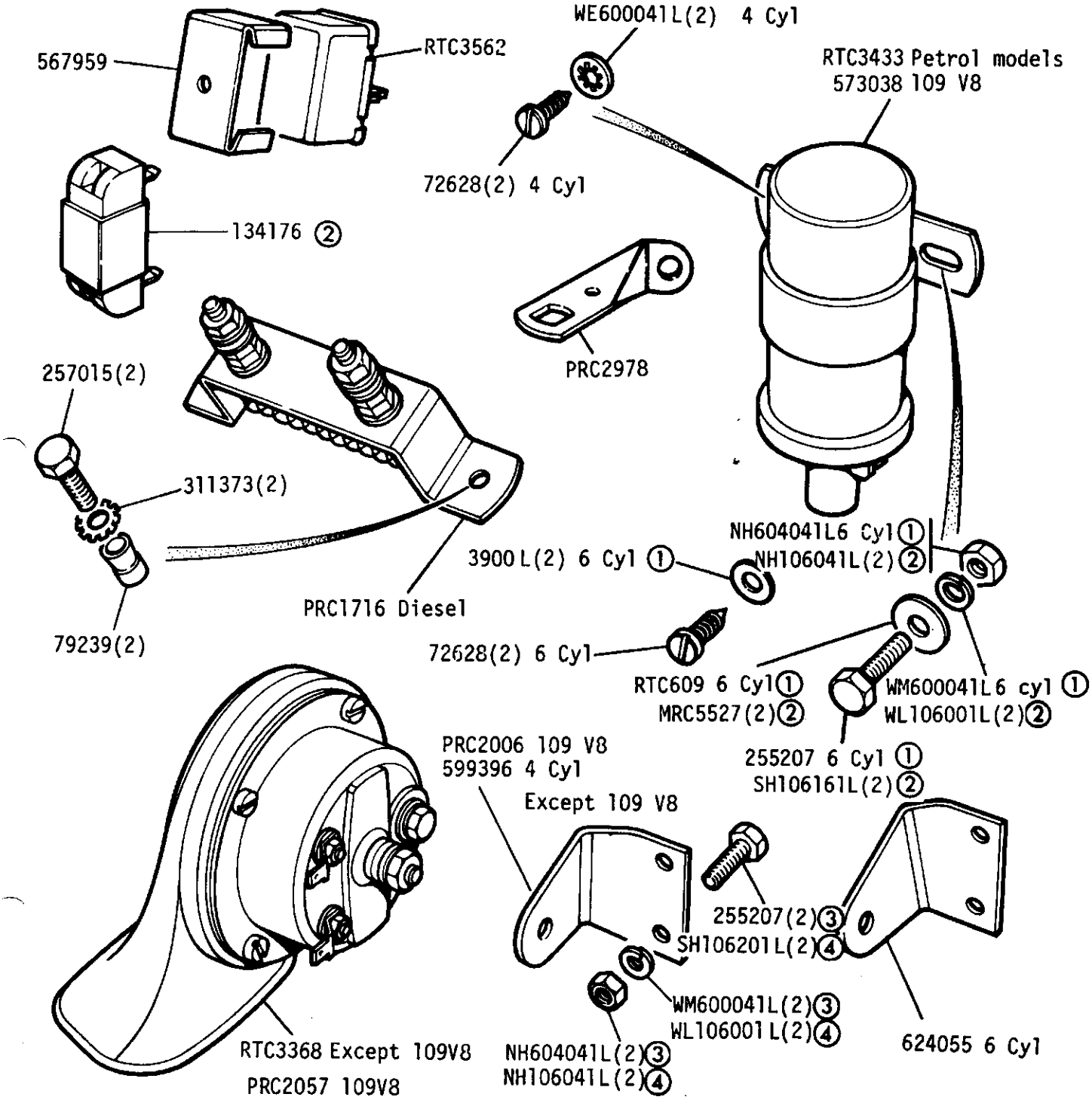

① Alernative fixings check before ordering
② 109 V8
③ UNF
④ METRIC

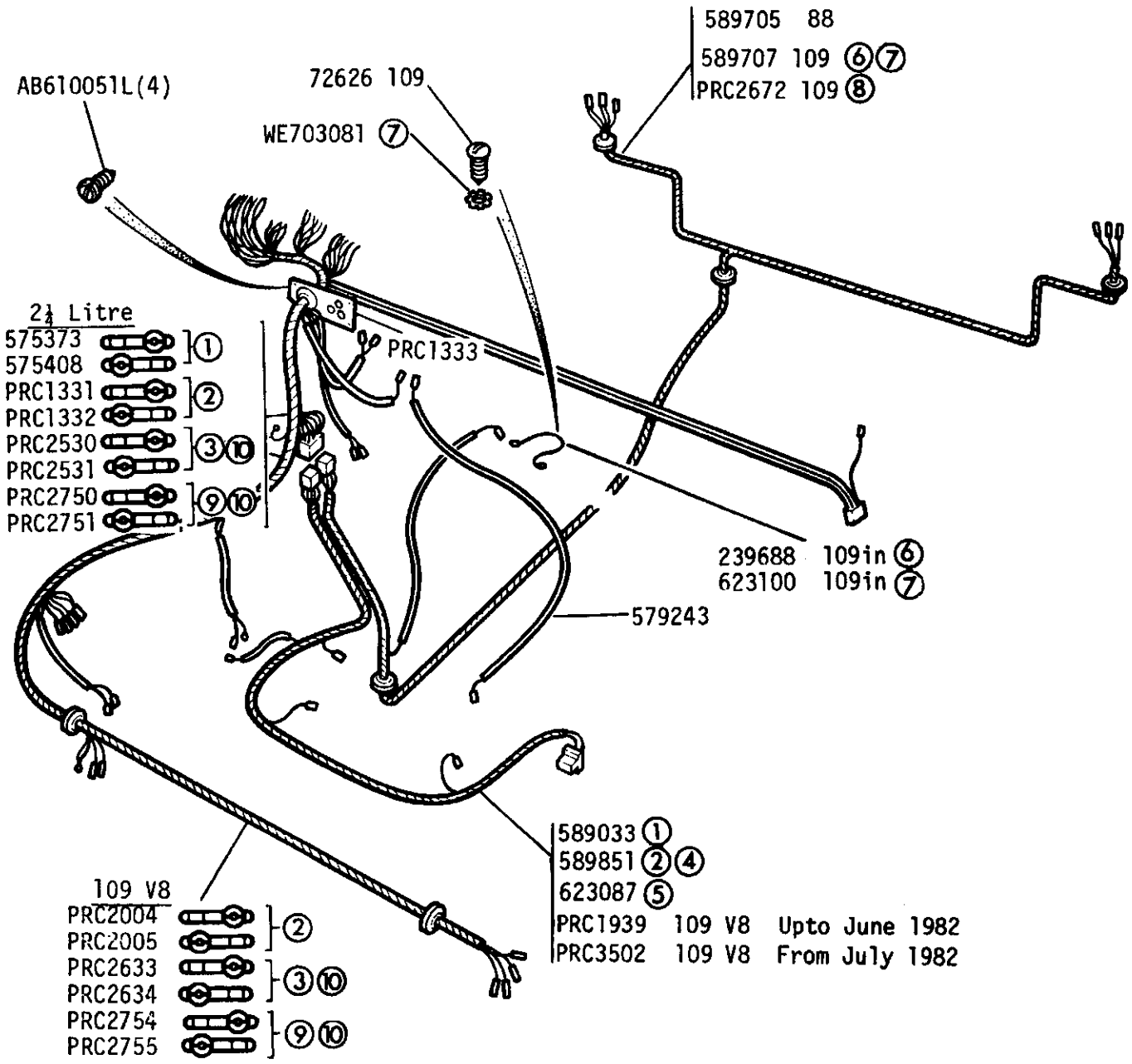

① Vehicles with choke thermostat warning switch
② Vehicles without choke thermostat warning switch - Up to Aug 1980
③ Vehicles without choke thermostat warning switch - From Sept 1980 to Jan.1983
④ All models up to engine suffix 'A'
⑤ All models from engine suffix 'B' onwards
⑥ 109 Station Wagon up to vehicle suffix 'B' inclusive
⑦ All 109 models from vehicle suffix 'C' onwards
⑧ 109 except Station Wagon up to vehicle suffix 'B' inclusive
⑨ From Feb. 1983
⑩ For vehicles with Rear Fog and Reverse Lamps

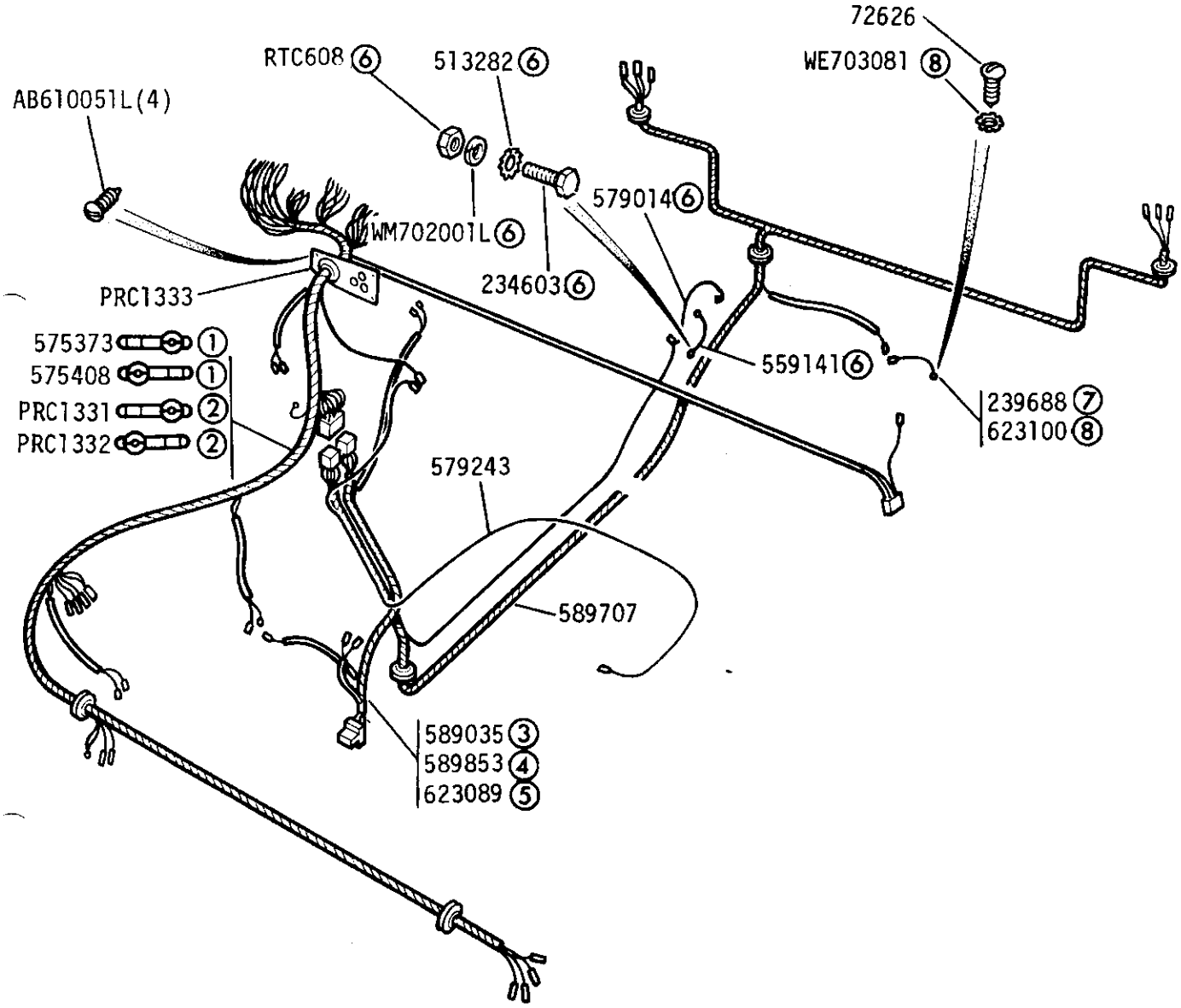

① Vehicles with choke thermostat warning switch
② Vehicles without choke thermostat warning switch
③ Up to April 1973
④ Engine suffix 'A'
⑤ From engine suffix 'B' onwards
⑥ Vehicle suffix 'A'
⑦ Vehicle suffix 'A' and 'B'
⑧ From vehicle suffix 'C' onwards

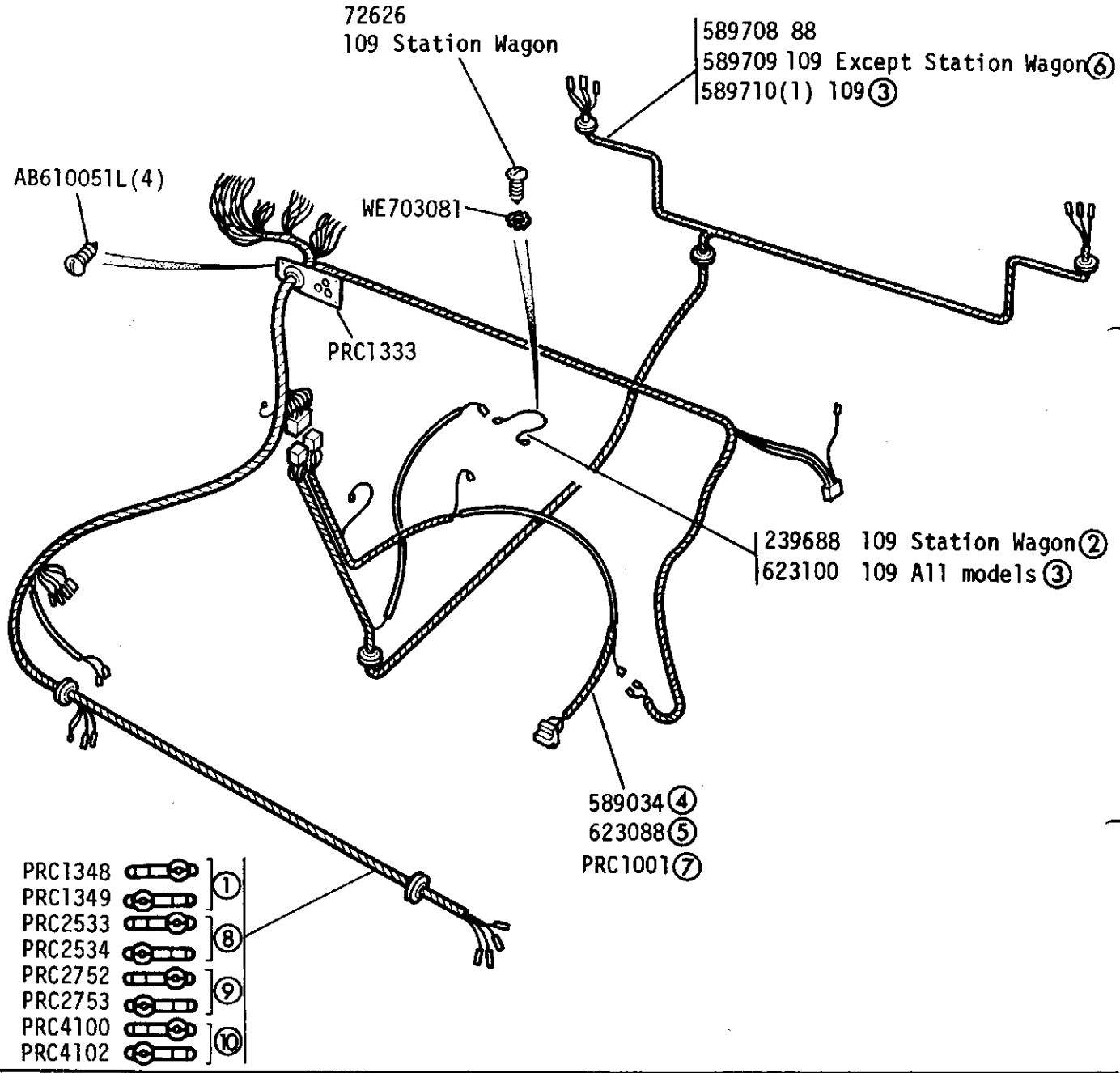

① Vehicles with 3 hole grommet plate - Up to June 1980
② 109 Station Wagon up to vehicle suffix 'B' inclusive
③ All 109 models from vehicle suffix 'C' onwards
④ All models engine suffix 'A'
⑤ All models engine suffix 'B'
⑥ 109 except Station Wagon up to vehicle suffix 'B' inclusive
⑦ All models from engine suffix 'C' onwards
⑧ July 1980 to January 1983
⑨ February 1983 to November 1983
⑩ December 1983 onwards (Ballast Resistor deleted)

ELECTRICAL - Battery, Starter Solenoid and Cables - Petrol Models

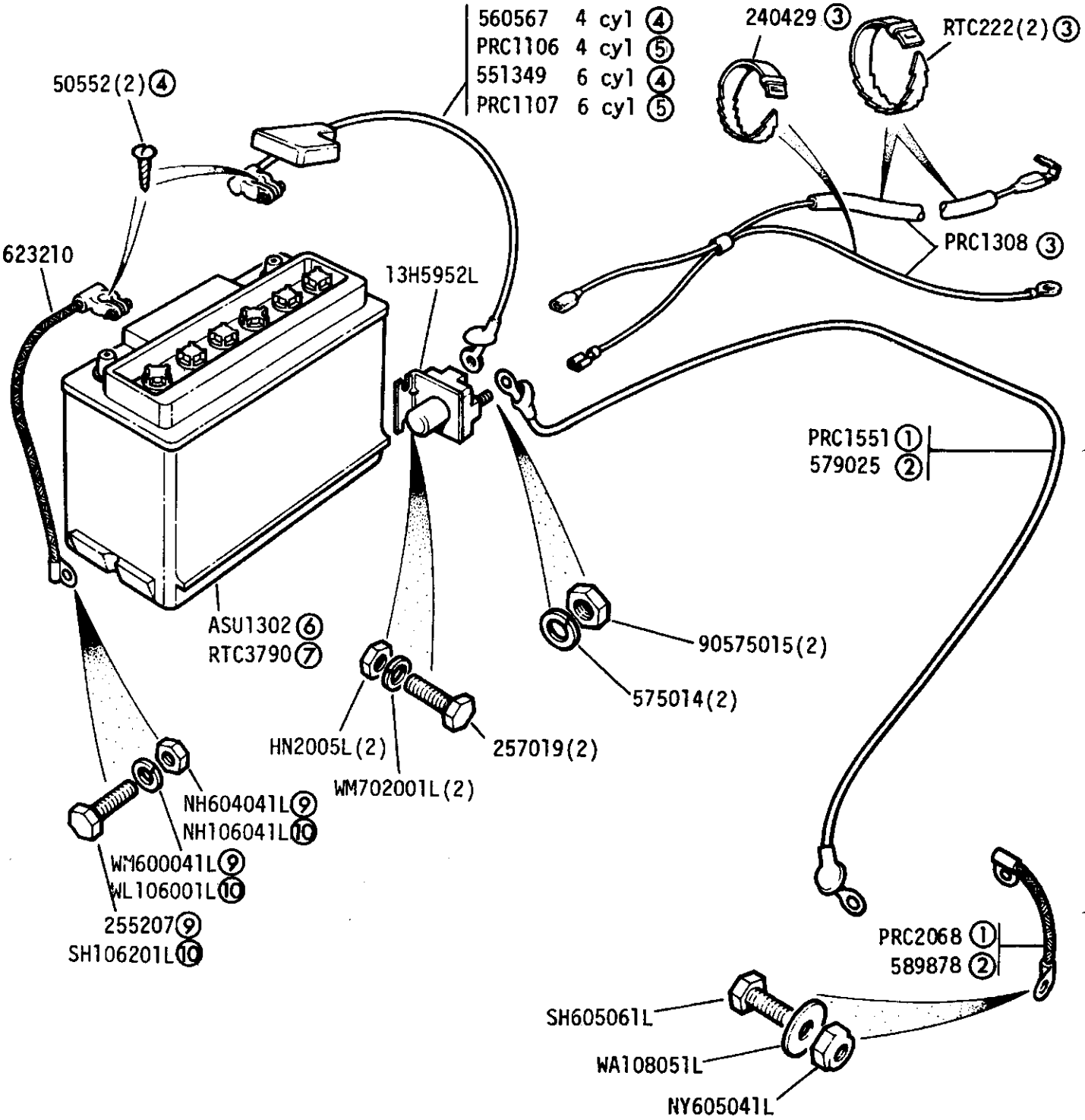

① 2¼ Petrol		⑨ UNF	
② 2.6 Petrol		⑩ METRIC	
③ 2.6 Petrol when Detoxed Engine is fitted			
④ Drive screw type	Lead, battery earth	PRCI598)	
⑤ Clamp type	Lead, battery to solenoid	PRCI597)	I09 V8
⑥ Wet charged Battery	Lead, engine to earth	PRC3625)	
⑦ Dry charged Battery			

ECTRICAL - Battery and Cables, Diesel Models

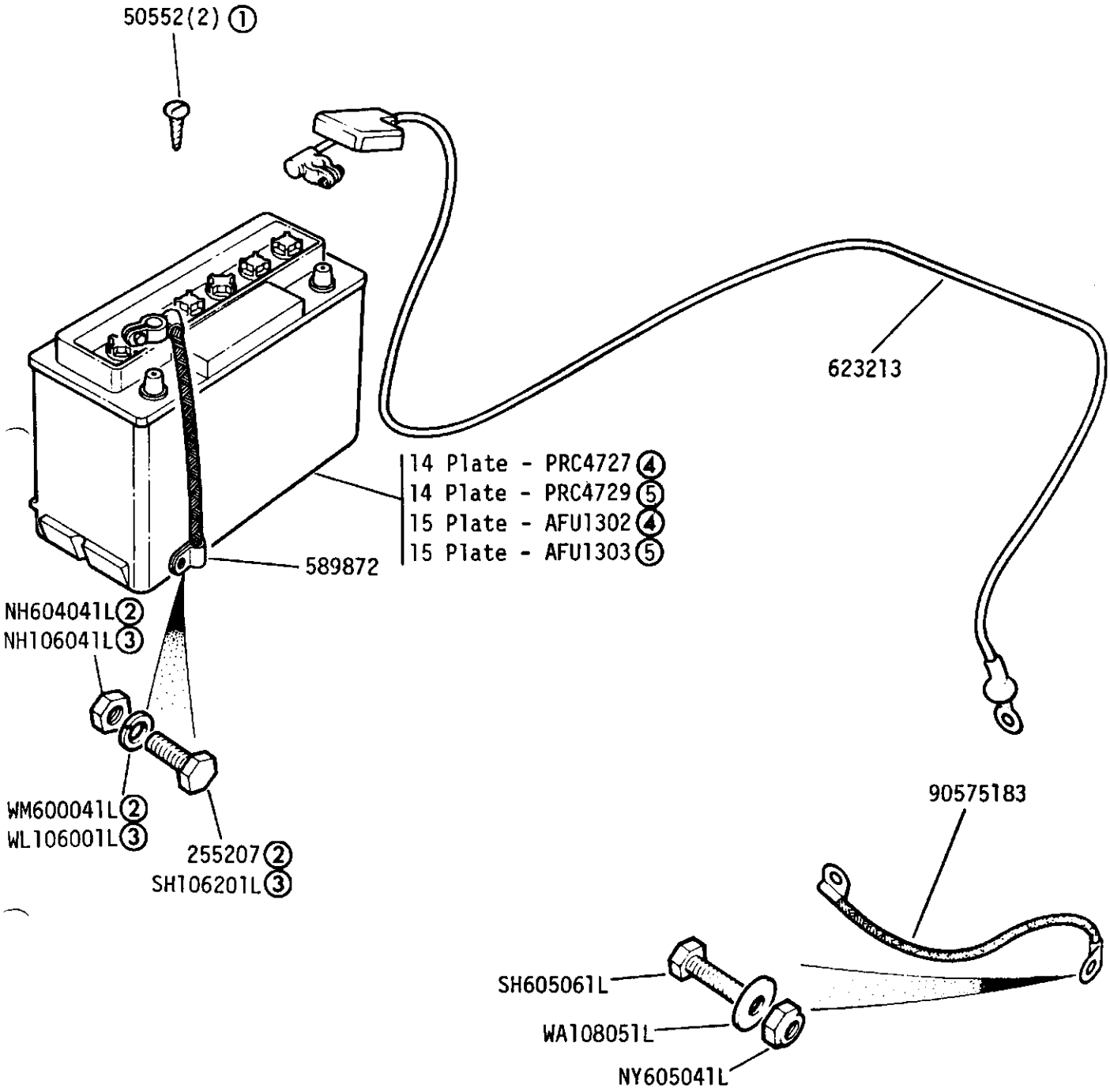

① For early type cable with drive screw connections
② UNF
③ METRIC
④ Wet charged Battery
⑤ Dry charged Battery

GROUP K
ELECTRICAL - Auxiliary instrument panel

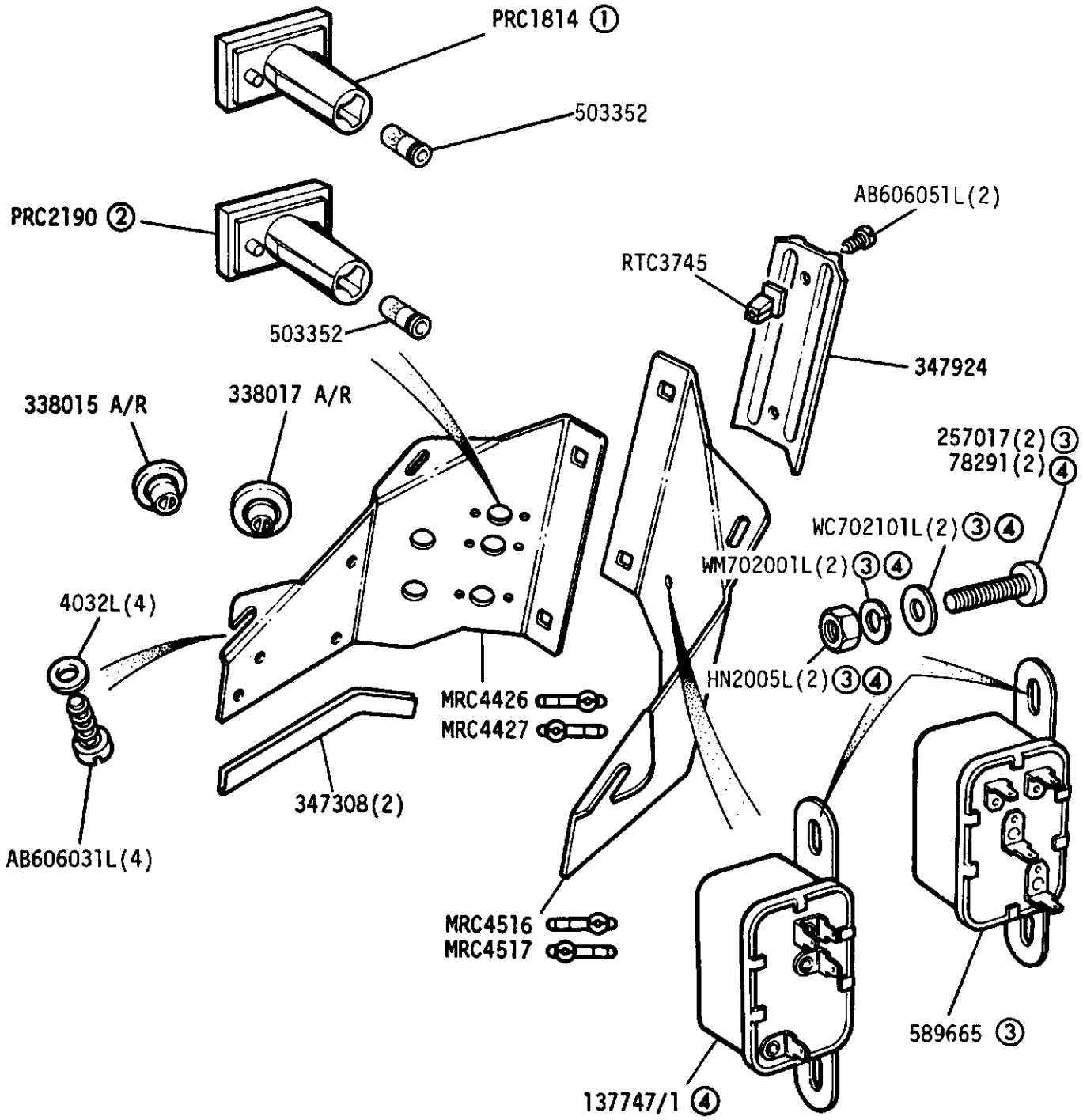

① Lens - brake warning light (dual brakes system)
② Lens - differential warning light - 109V8 only
③ Relay - ignition switch - 109V8 only
④ Relay - brake warning (dual brakes system)

ELECTRICAL - Brake failure warning - dual brakes system

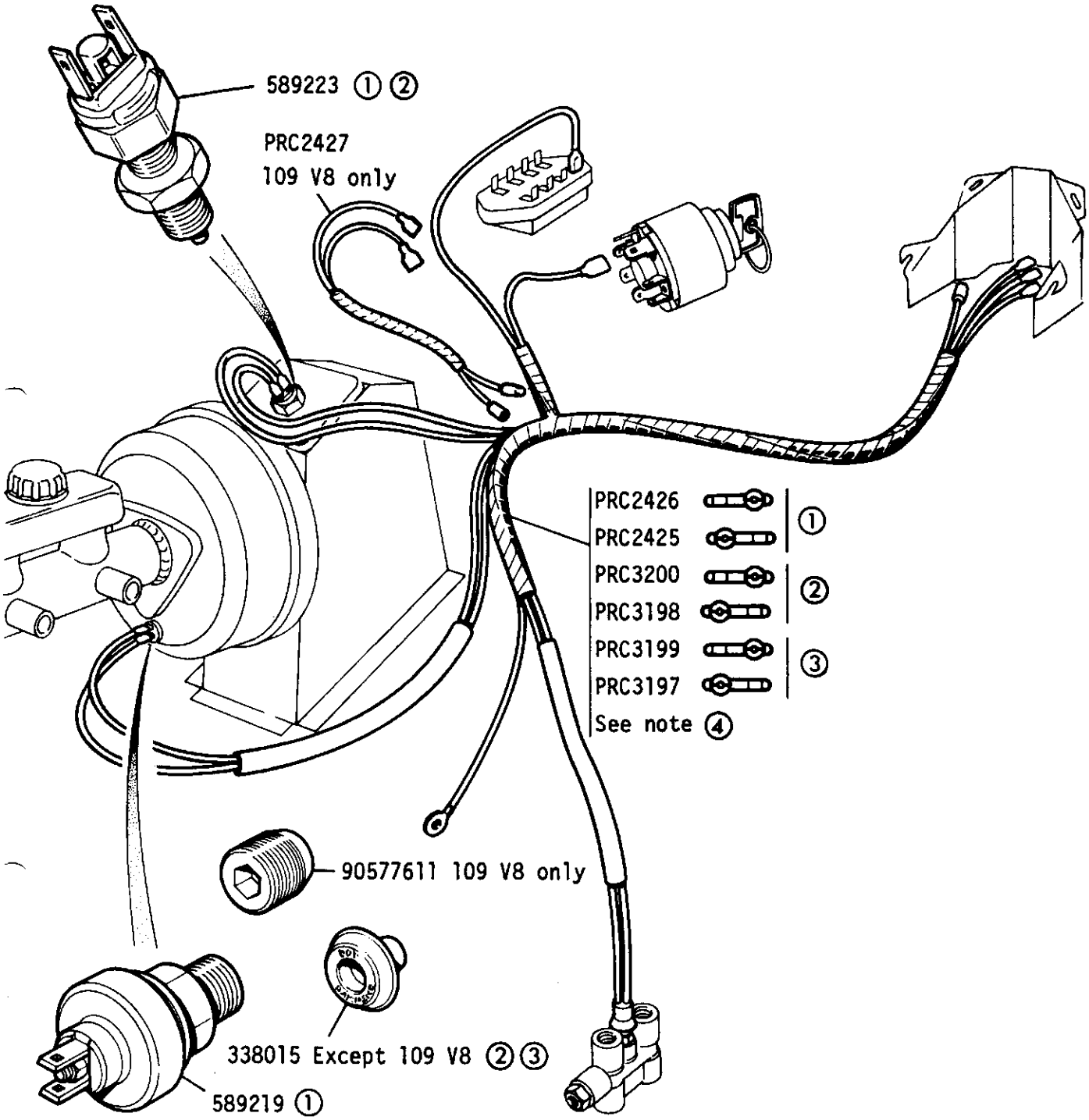

① Vehicles with pedal travel and vacuum loss switch
② Vehicles with pedal travel switch only
③ Vehicles without pedal travel or vacuum loss switches
④ Not applicable to 109 V8 (part of Main Harness)

R.184 GROUP K AUDIBLE WARNING SAFETY HARNESS. 88" - SAUDI ARABIA ONLY.

PLATE REF. 1 2 3 4	DESCRIPTION	QTY.	PART No.	REMARKS
	Cable Assembly - Seat Belt Warning	1	PRC4302	
	Buzzer	1	PRC4299	
	Mounting Clip - Buzzer	1	PRC4304	
	Screw) Fixing	1	257017	
	Spring Washer) Mounting	1	WM702001L	
	Nut) Clip	1	HN2005L	
	Clip - Seat Buckle Leads to Locker Base Panel	3	AFU2879	
	Cable Tie - Seat Buckle Leads to Speedometer Cable	5	C43640	

* ASTERISK INDICATES A NEW PART WHICH HAS NOT BEEN USED ON ANY PREVIOUS MODEL

GROUP K
ELECTRICAL - Windscreen washer - tubing, jets and fixings

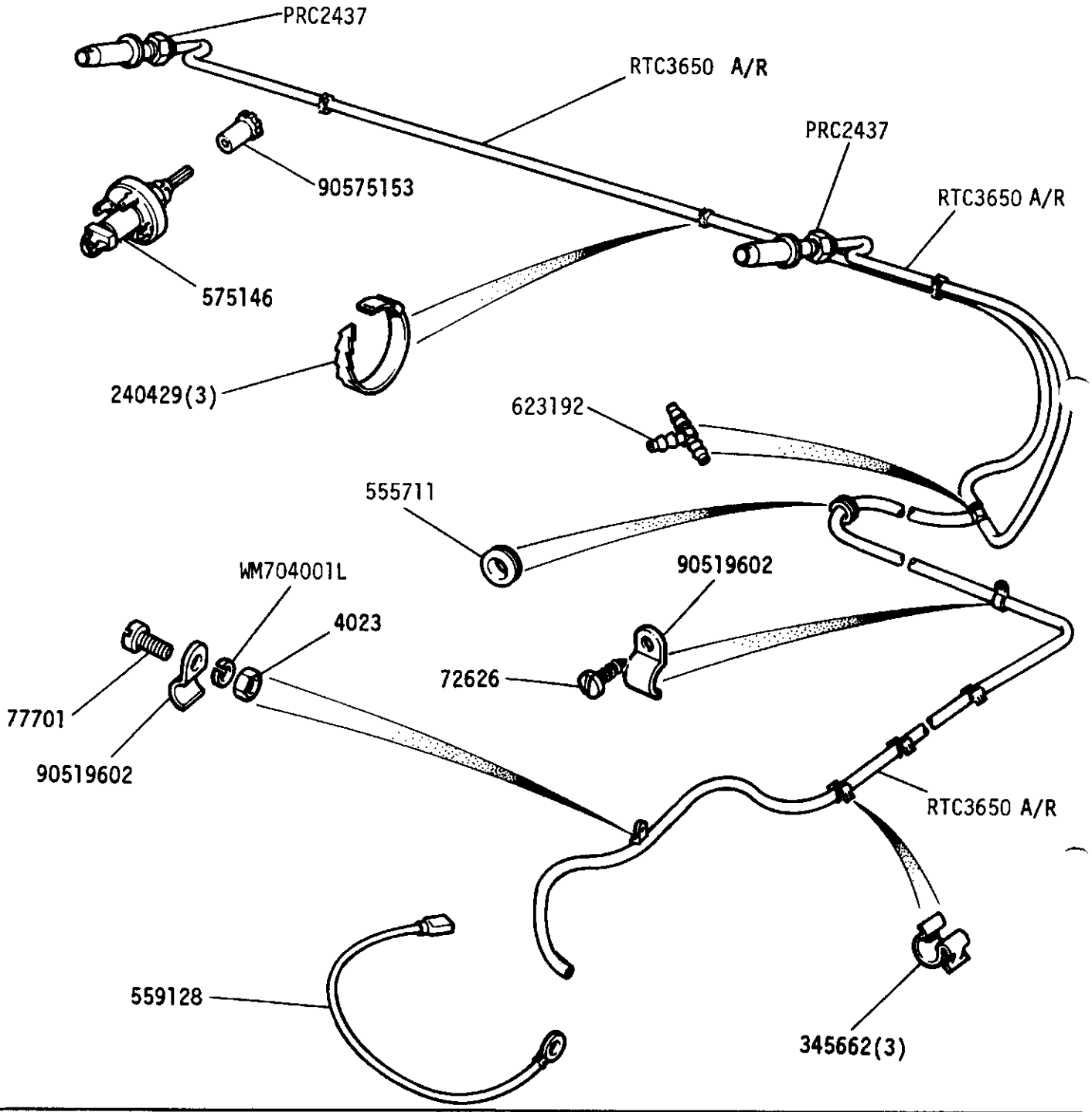

ELECTRICAL - Windscreen Washer Bottle and Tubing

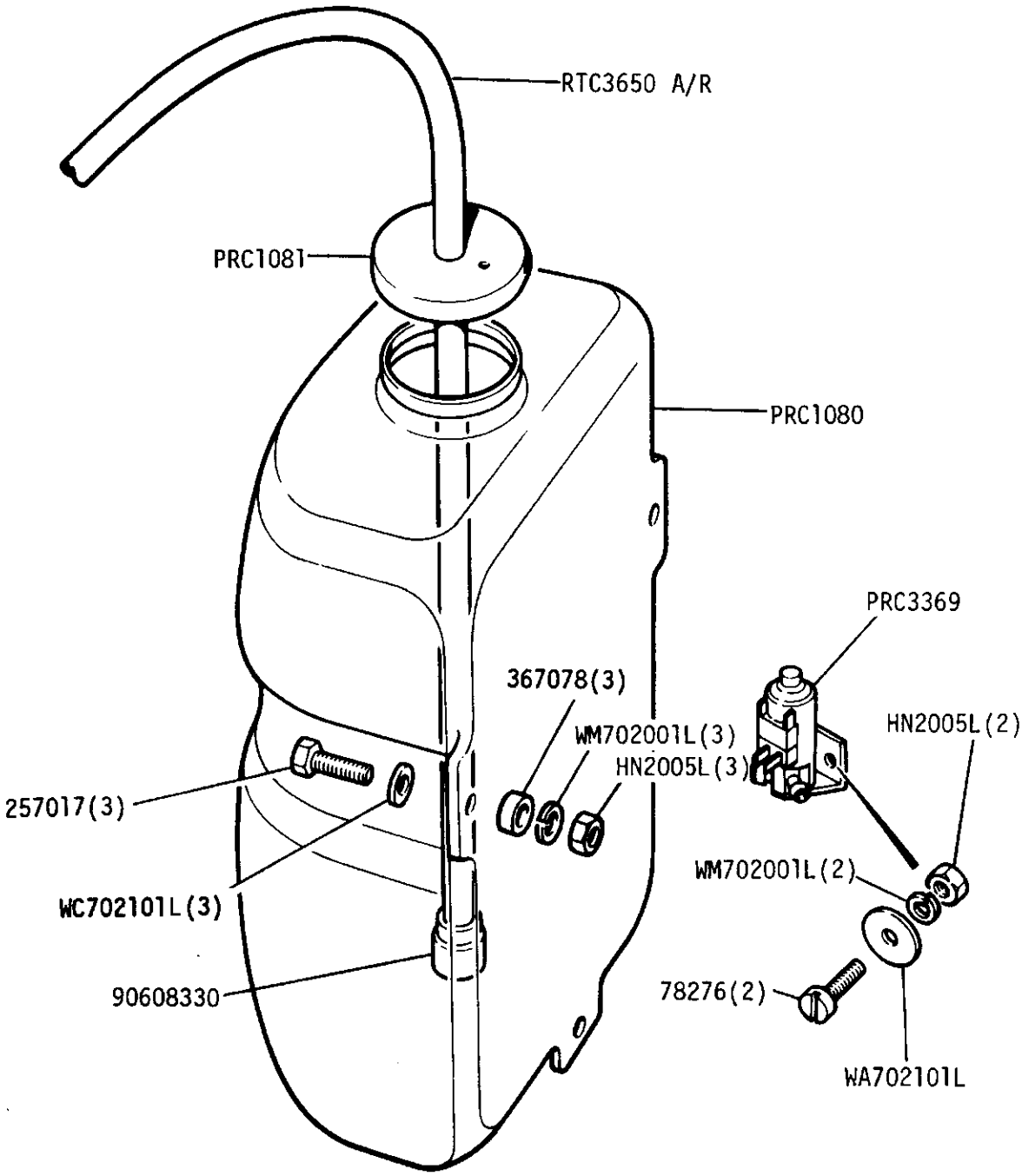

GROUP L
CHASSIS FRAME

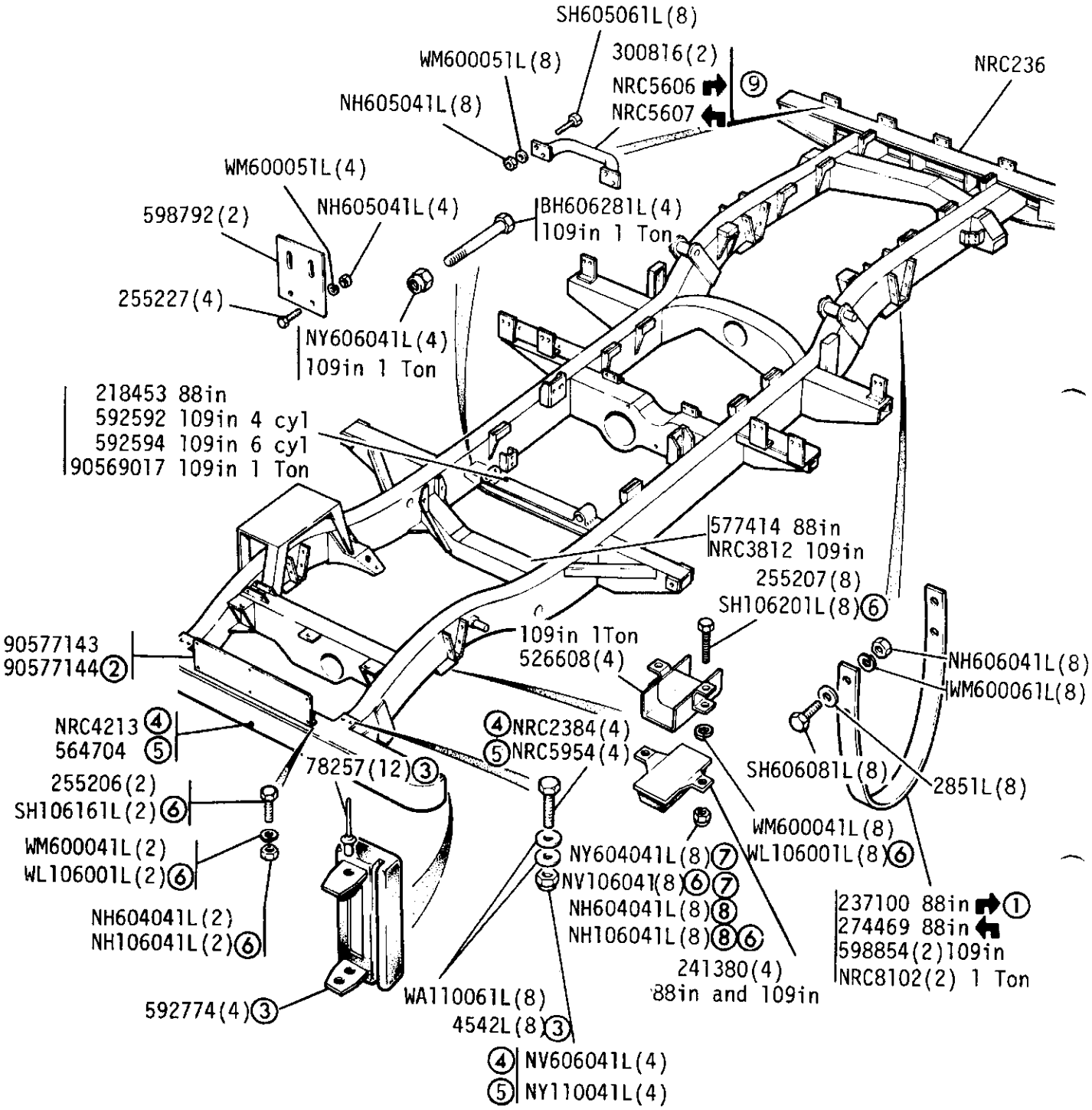

① 2 required with two-piece axle casing
② Optional
③ Germany
④ Up to May 1980
⑤ From June 1980 onwards
⑥ Metric
⑦ 88in and 109in
⑧ 109in 1 Ton
⑨ Alternatives

Protection Pad, Front Bumper - NRC7439(2)③
Rivet, Pad to Bumper - 78248(8)③
Cover, Bumper Bolt - NRC7571(8)③

Bracket, upper, front bumper mounting NRC4184)
Bracket, lower, front bumper mounting NRC4336) 109 V8 Up to May 1980

CHASSIS FRAME

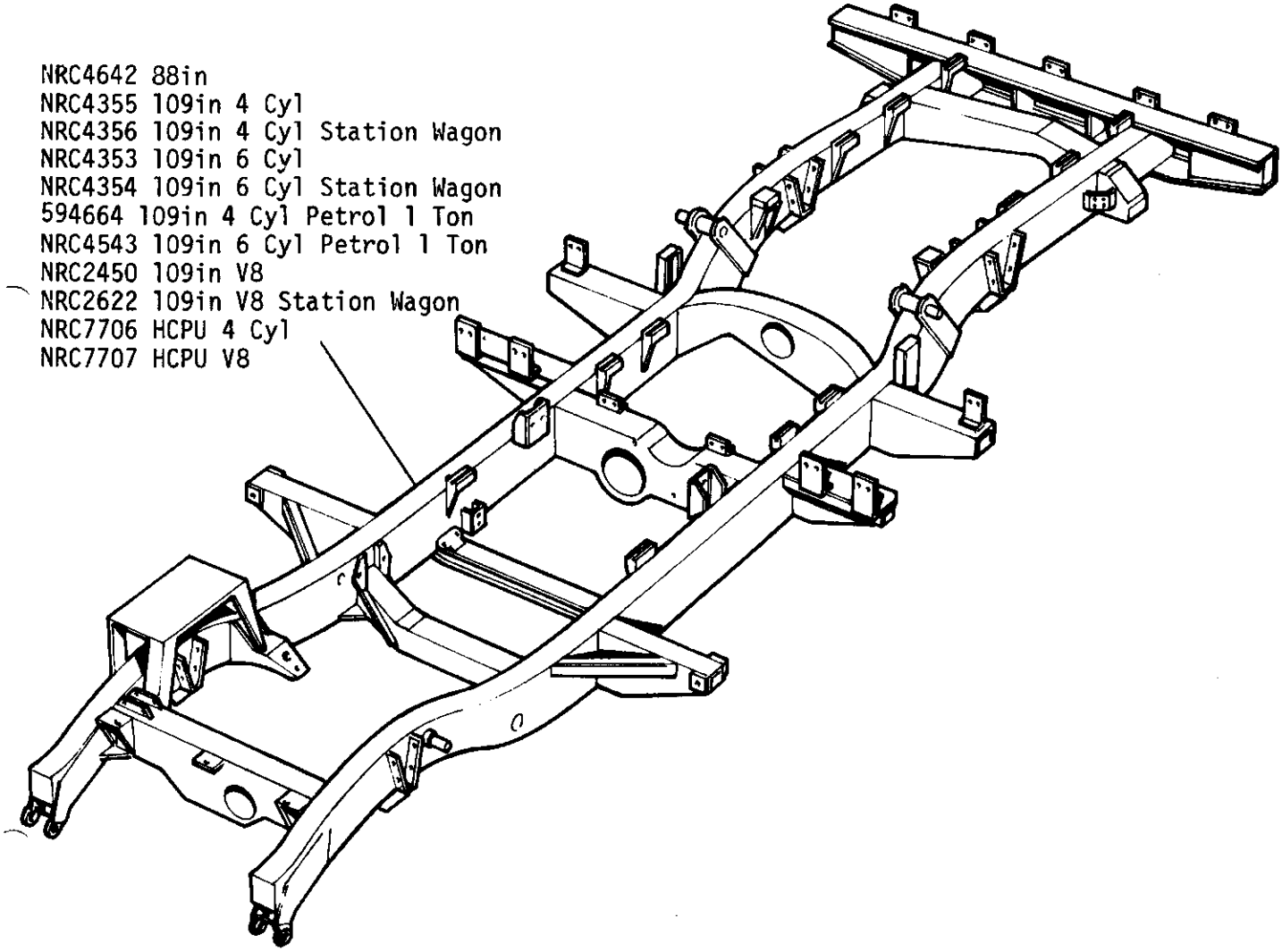

GROUP L
CHASSIS - Battery Casing and Air Cleaner Support
- Except 109 V8

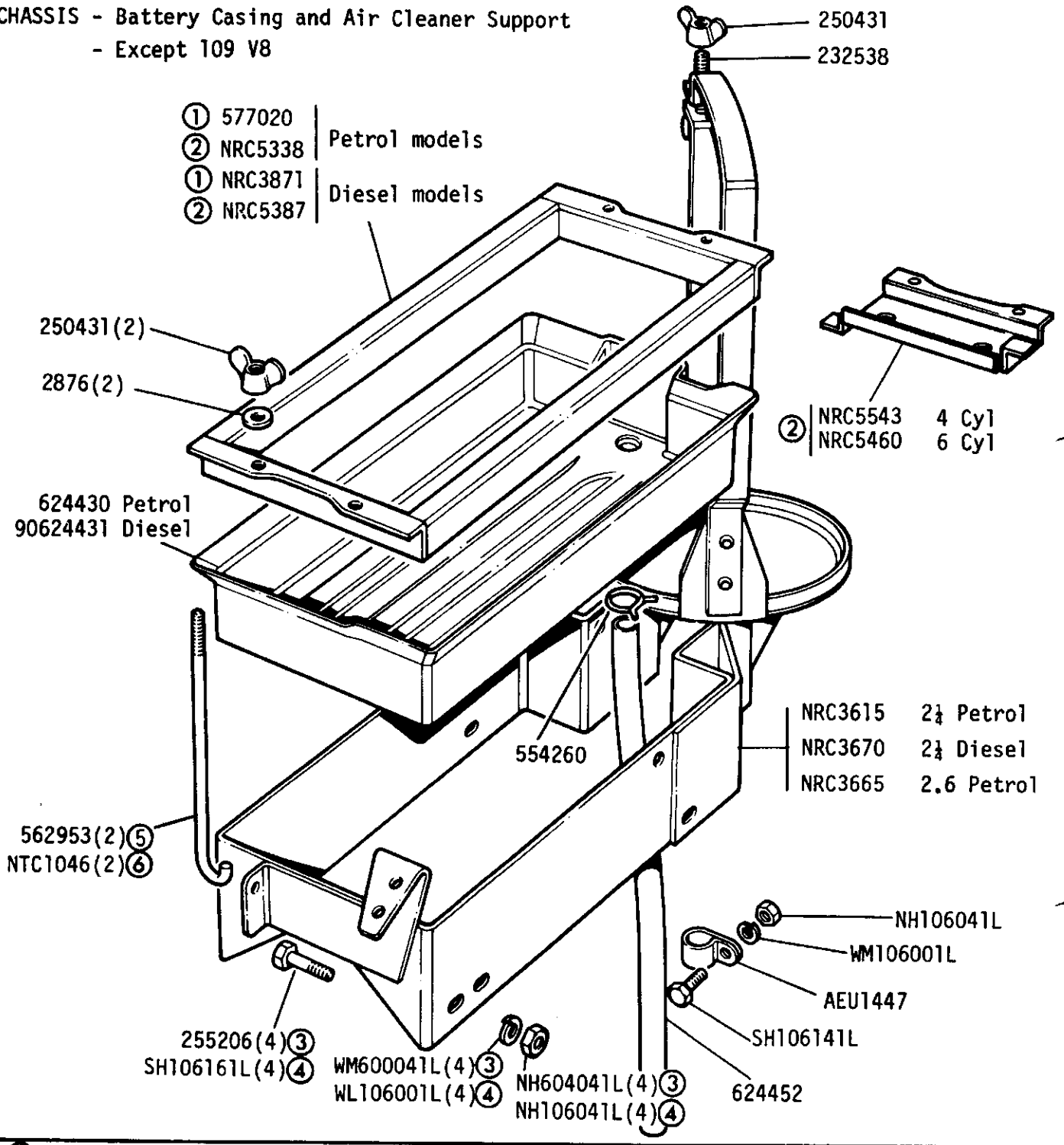

① Up to November 1980
② From December 1980
③ UNF
④ METRIC
⑤ Upto September 1984
⑥ From October 1984

Battery Spacer Assembly - NRC9631(2)⑥

GROUP L
BODY - Battery Retention, 109V8

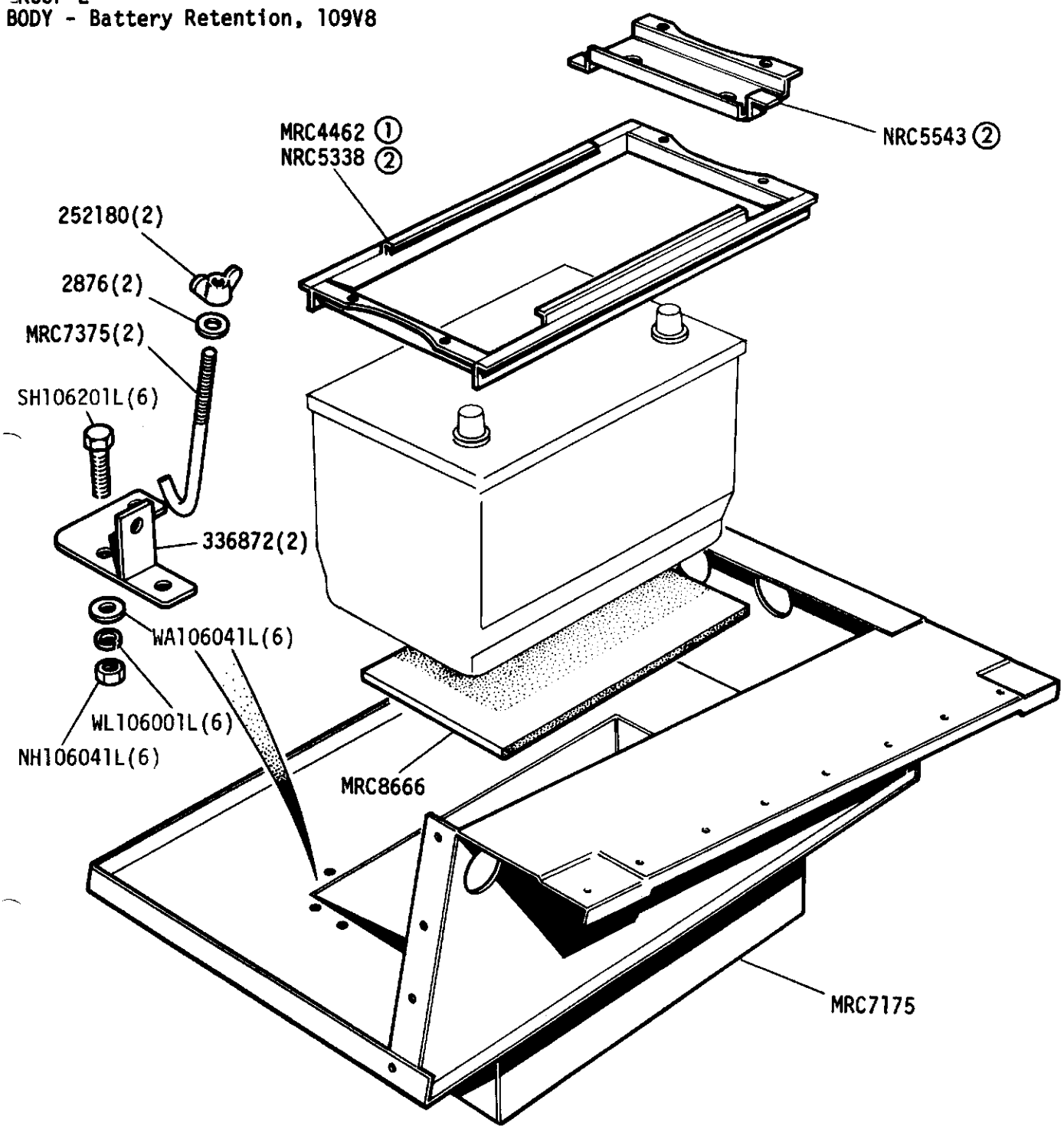

① Up to November 1980
② From December 1980

GROUP L
BODY - Radiator Grille Except 109 V8

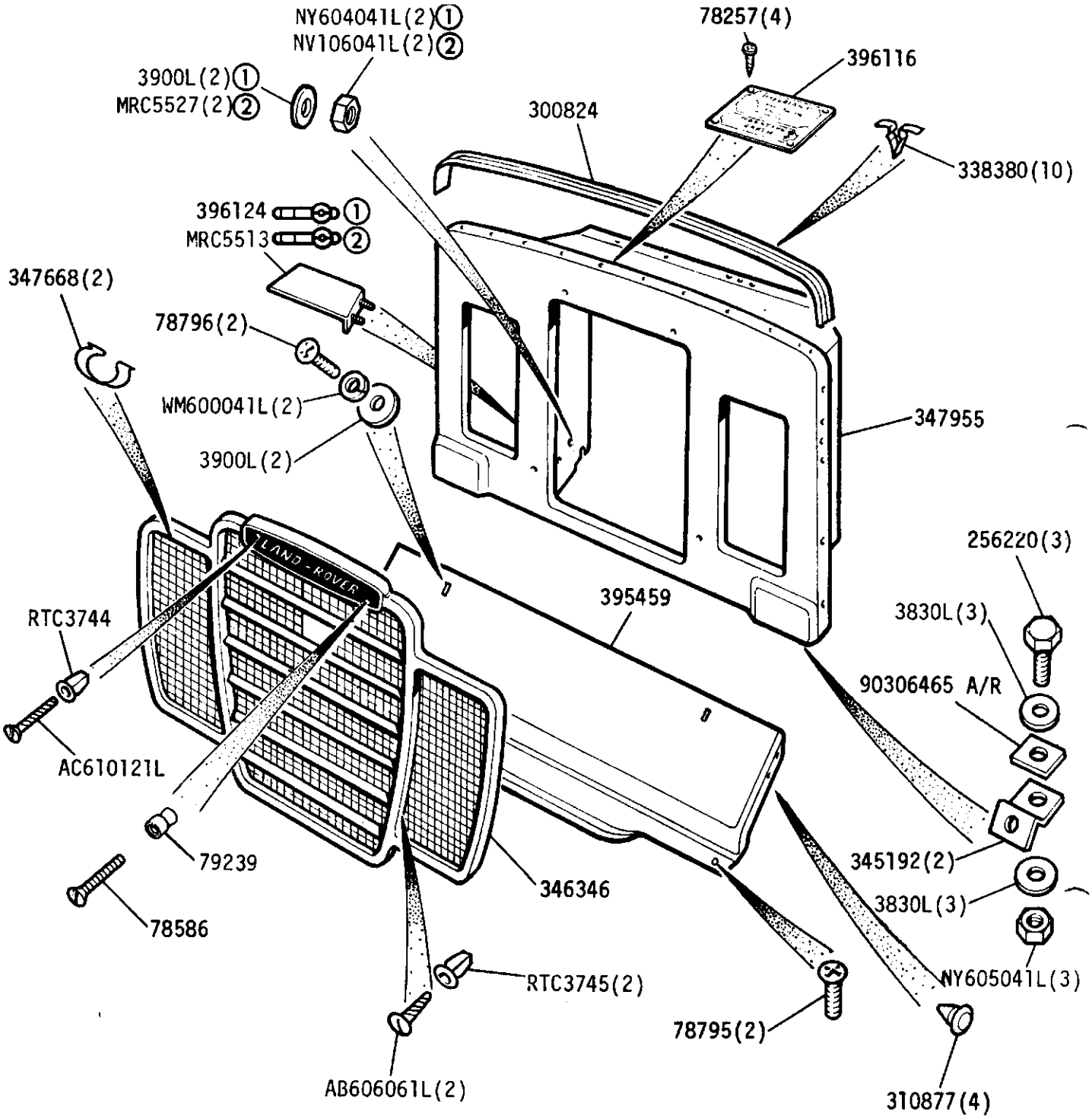

① UNF
② METRIC

GROUP L
BODY - Radiator Grille Panel, 109V8

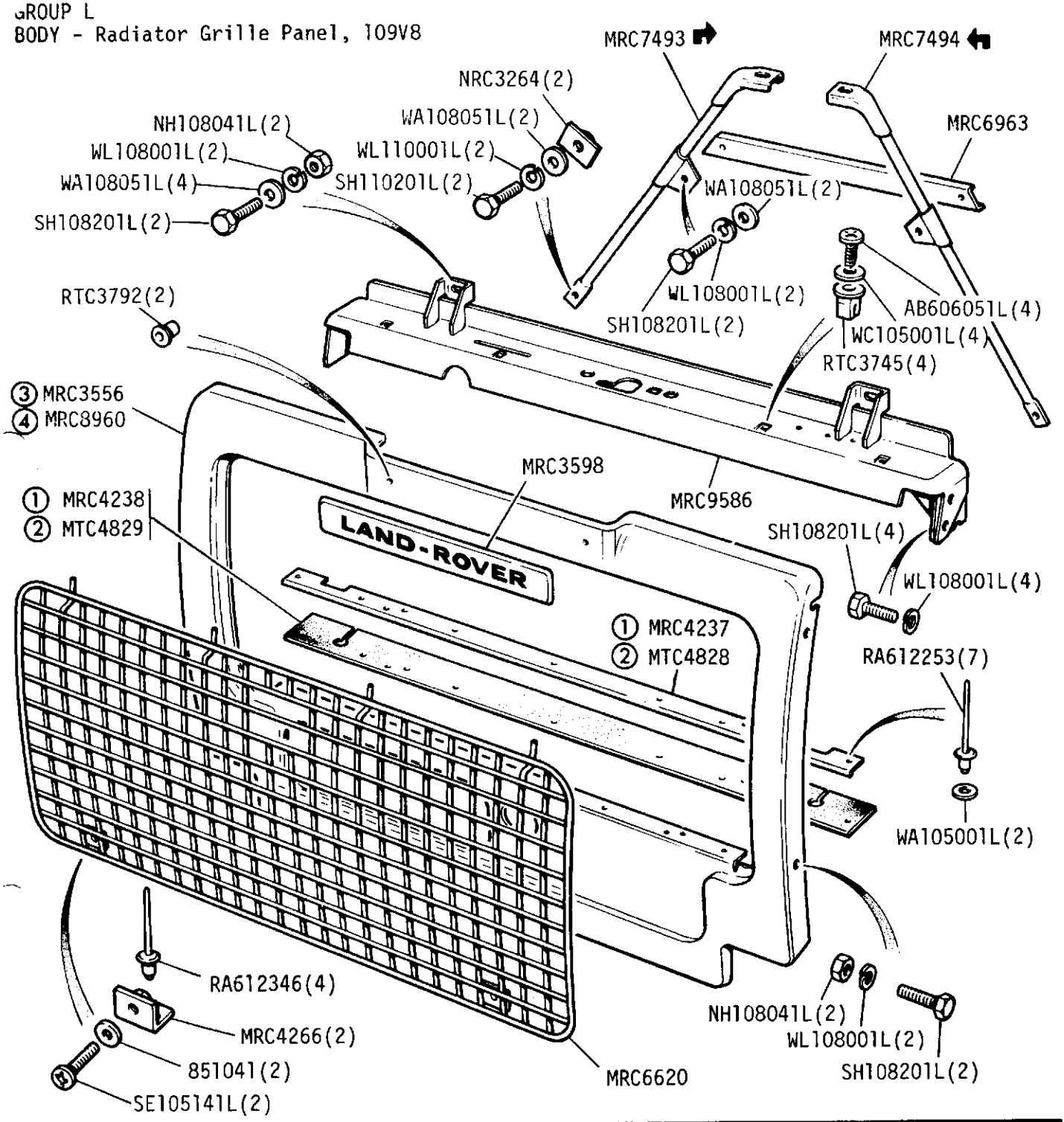

① Up to June 1983
② From July 1983
③ Up to May 1980
④ From June 1980 onwards

MRC5589 Bonnet lock assy
MRC6262 Key blank

GROUP L

BODY - Bonnet Except 109 V8

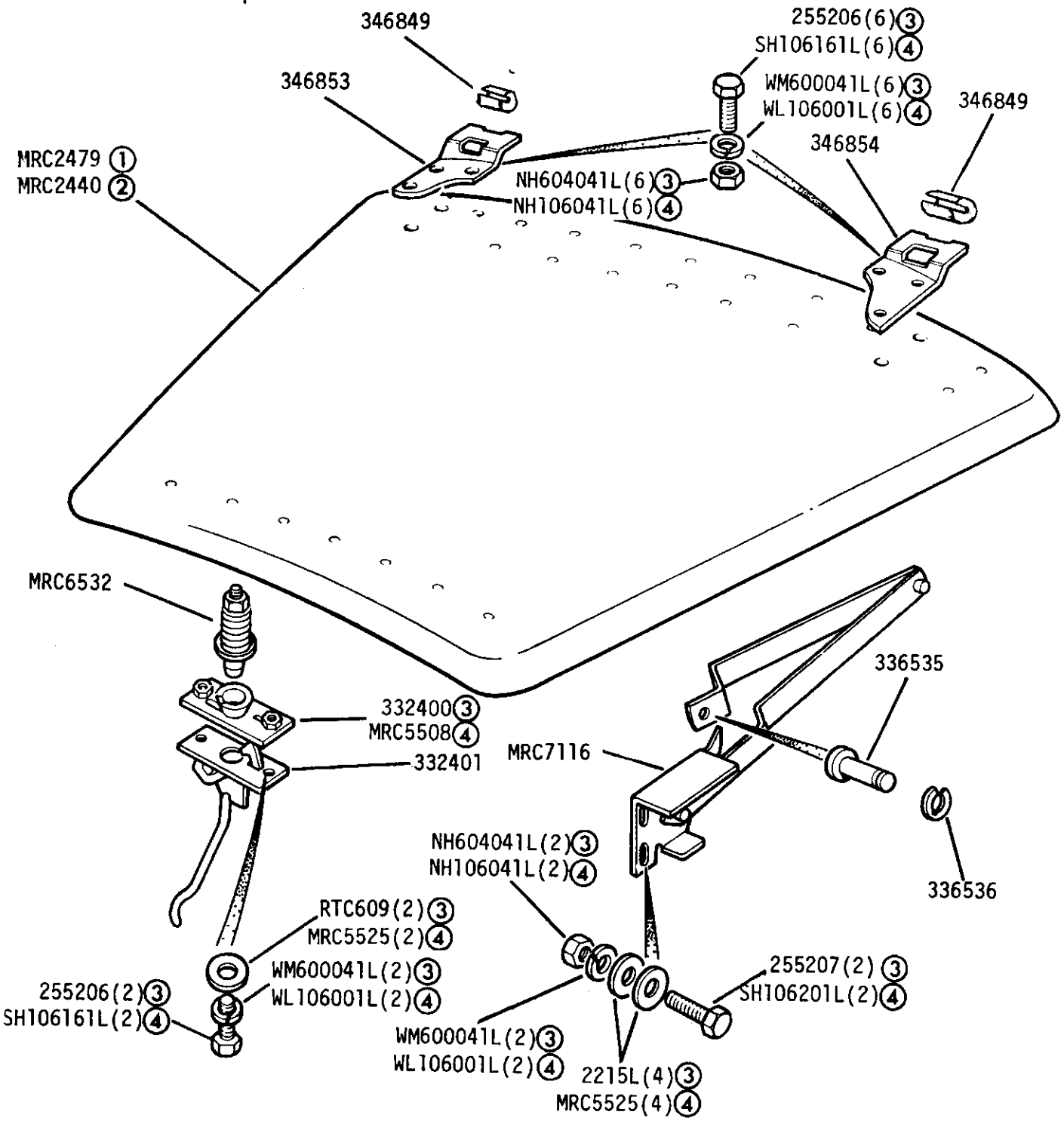

① Plain type

② De-Luxe recessed. Optional

③ UNF

④ METRIC

GROUP L
BODY - Bonnet, 109V8

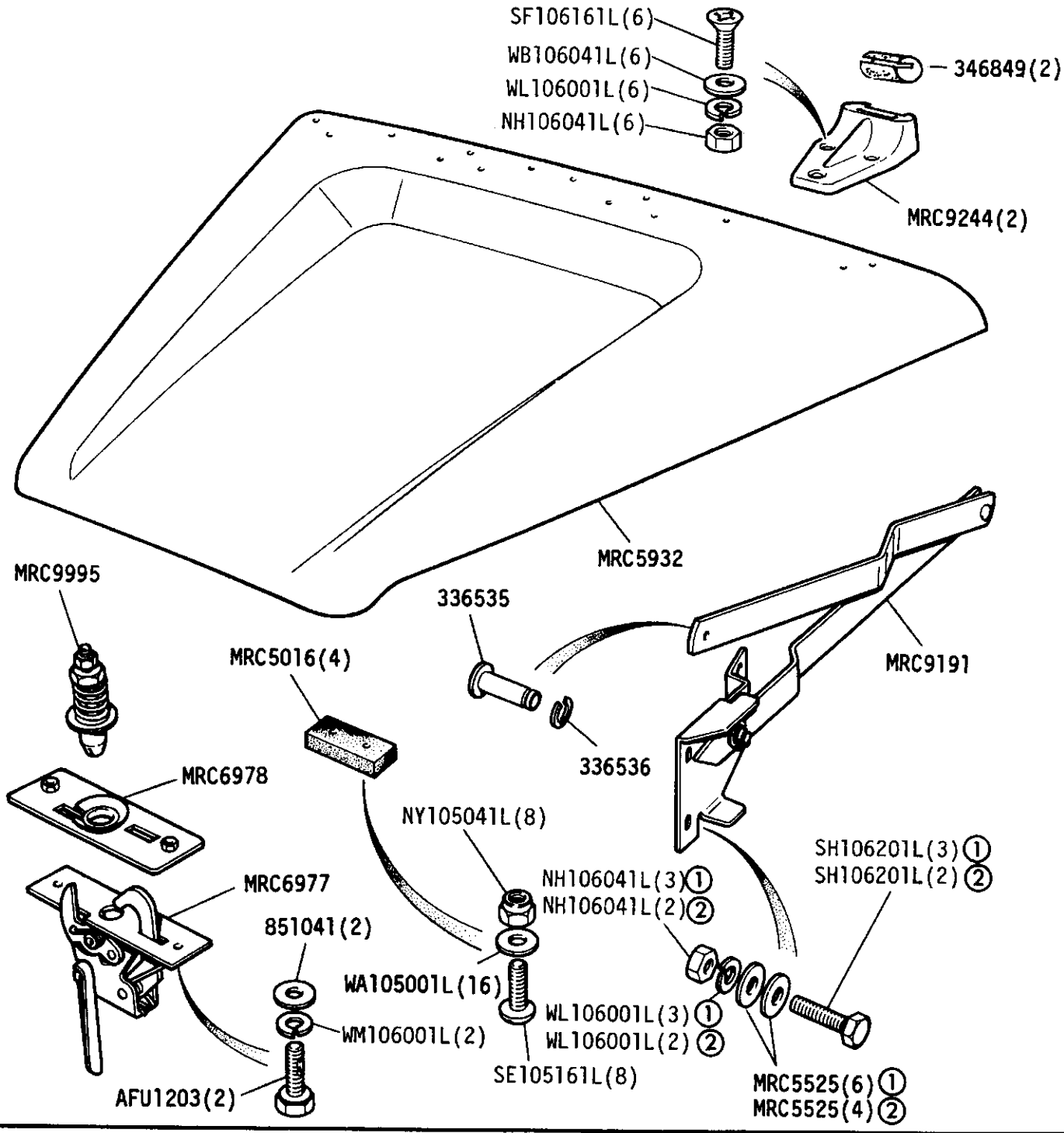

MRC6270:- Buffer - Bonnet (2)

① Except Station Wagon

② Station Wagon

GROUP L
BODY - Front Wings

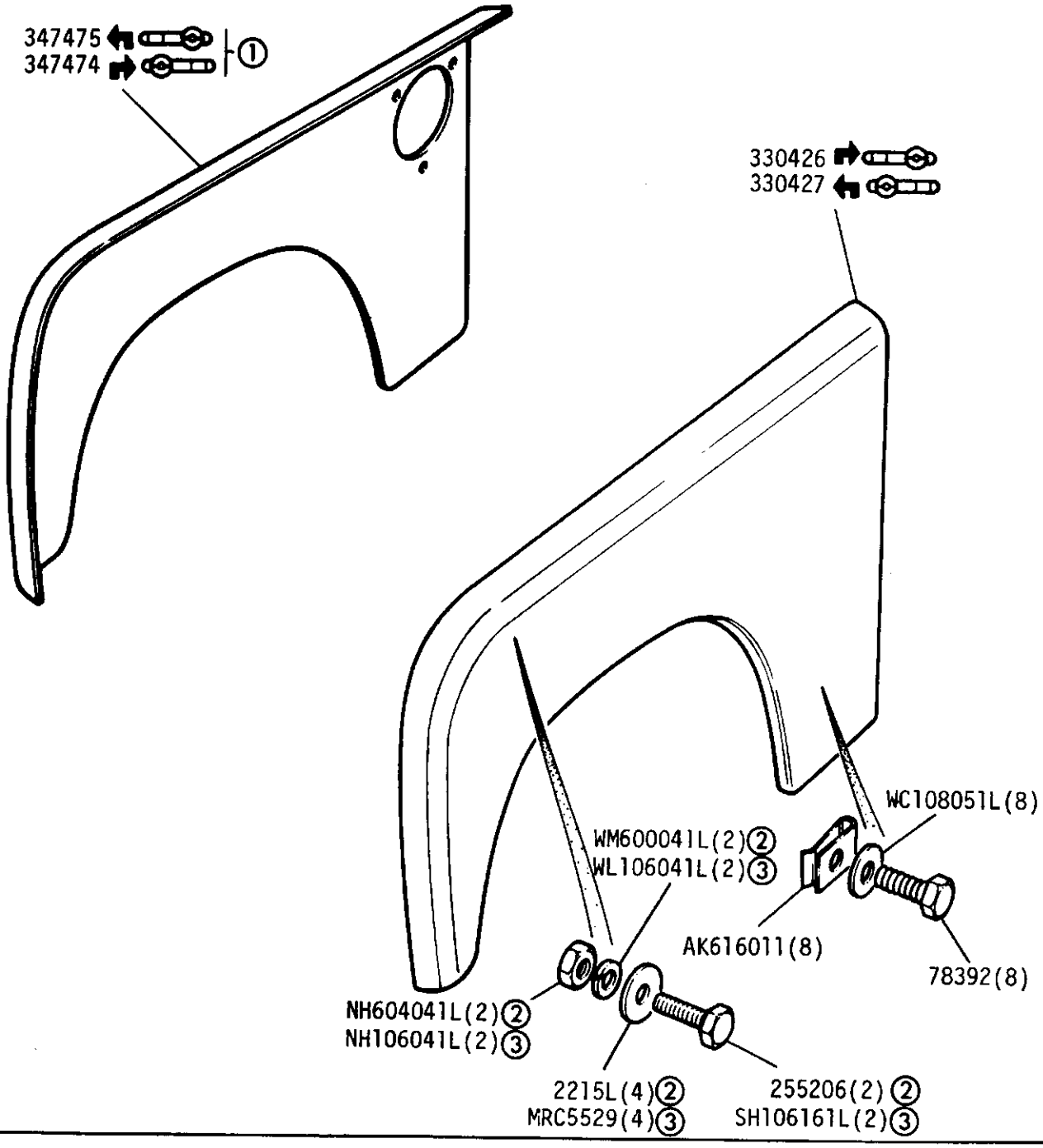

① With aperture for fresh air heater intake

② UNF
③ METRIC

GROUP L
BODY - Front Wing Top and Valance

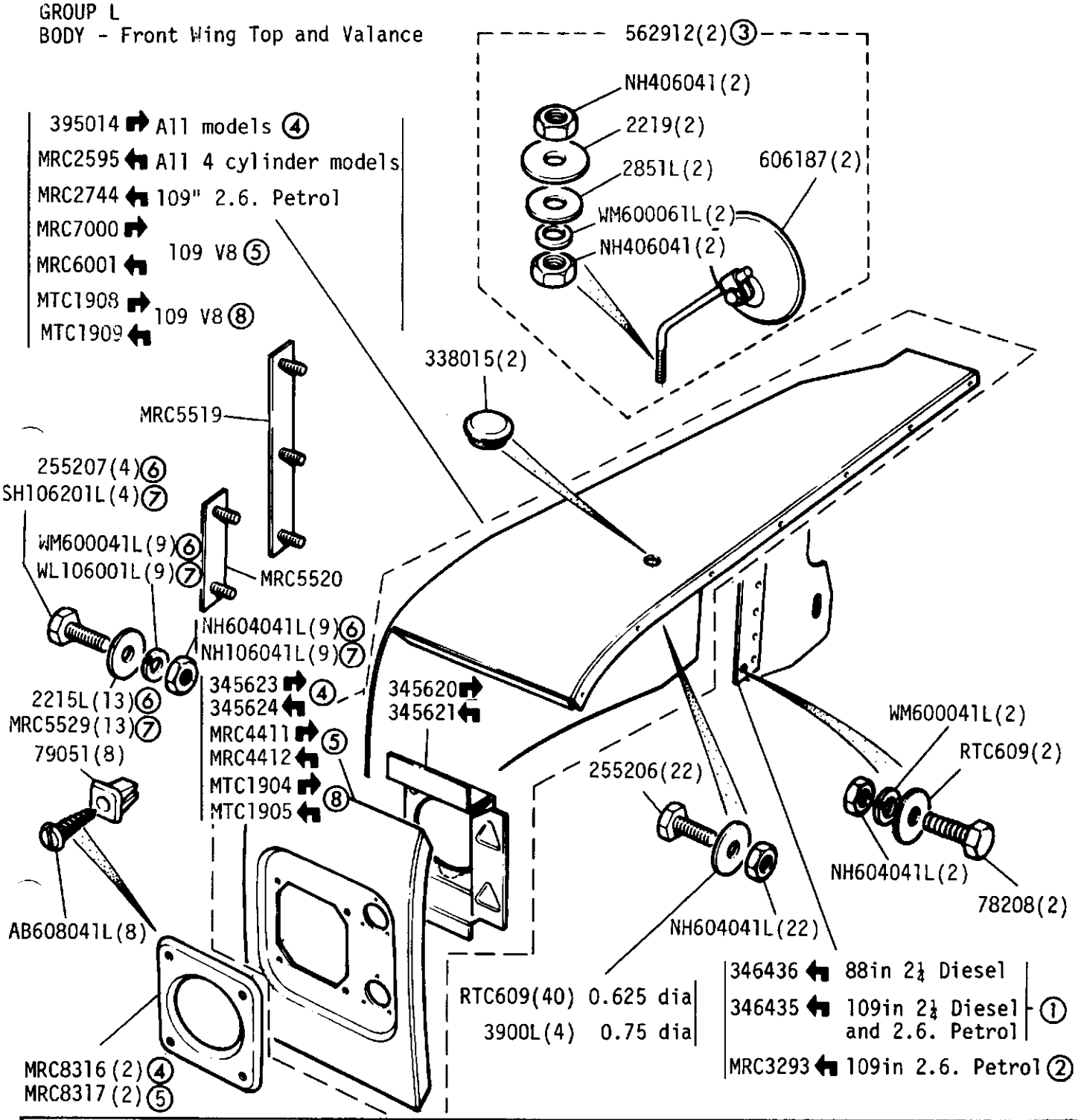

① Up to December 1974
② From January 1975 onwards
③ Up to November 1977 See frame 2I 03 for door mounted mirror
④ Except 109 V8
⑤ 109 V8 Upto SALLBCAV2AA188641
⑥ UNF
⑦ METRIC
⑧ 109 V8 From SALLBCAV2AA188642 onwards

GROUP L
BODY - Front wing fittings, 109V8 only

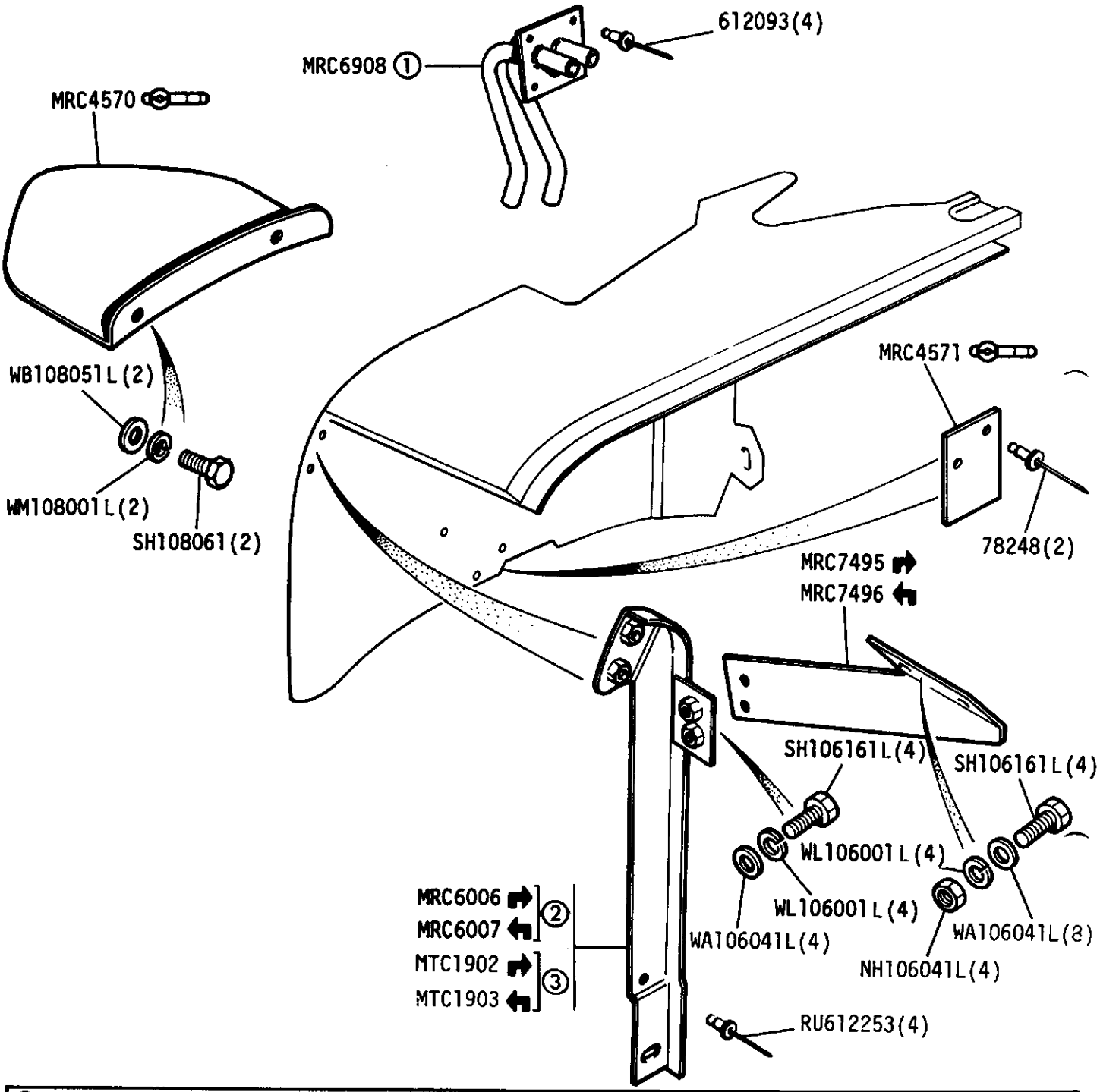

① RH wing only
② Up to SALLBCAV2AA188641
③ From SALLBCAV2AA188642 Onwards

Shim, wing to valance - MRC4037 (A/R)
Special bolt, Front wing to dash - AM605061(8)

GROUP L
BODY - Cover Panels - Front Wings

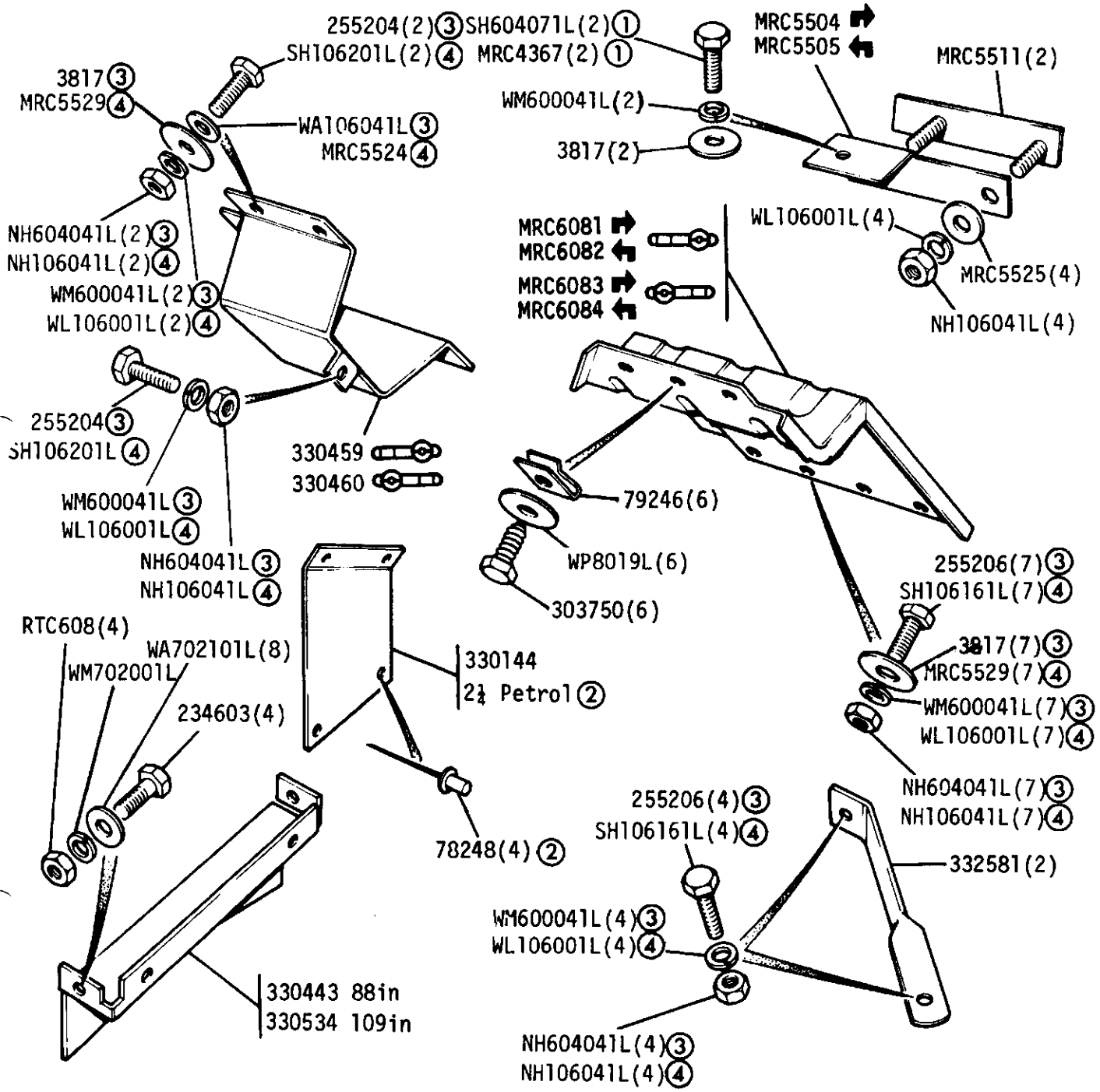

① Alternatives

② Early models only

③ UNF

④ METRIC

GROUP L
BODY - Dash

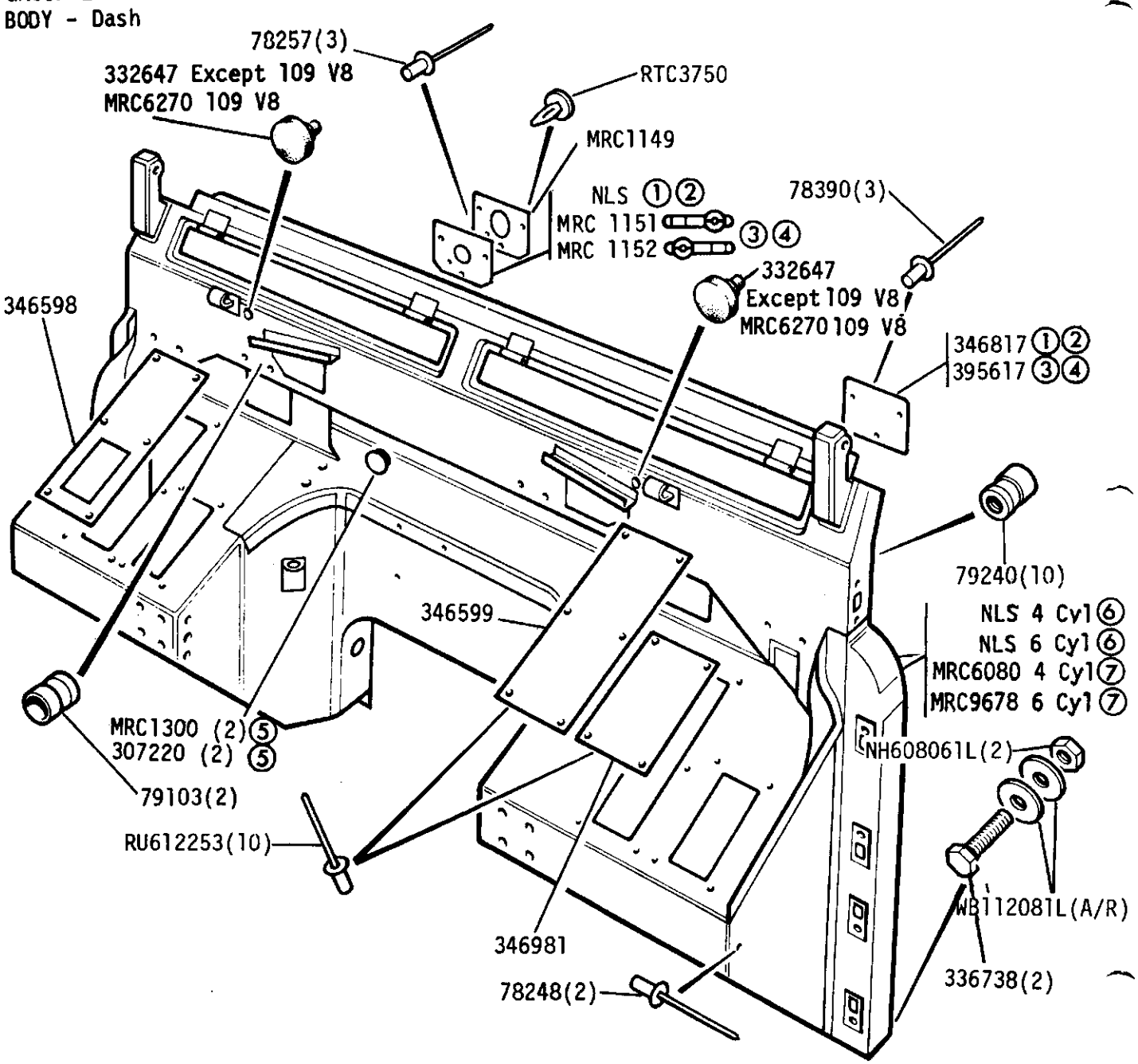

① 88 models up to August 1973
② 109 models up to vehicle suffix 'B' inclusive
③ 88 models from September 1973
④ 109 models from vehicle suffix 'C' onwards
⑤ Petrol models
⑥ Up to October 1975
⑦ From November 1975

Dash assembly MRC6080 109 V8

Note-Dash assembly MRC6080 can also be fitted to 4 cyl vehicles
see note on page 2G 10

MRC9563 Instruction plate, diff lock - 109 V8

GROUP L
BODY - Ventilator and Flyscreen

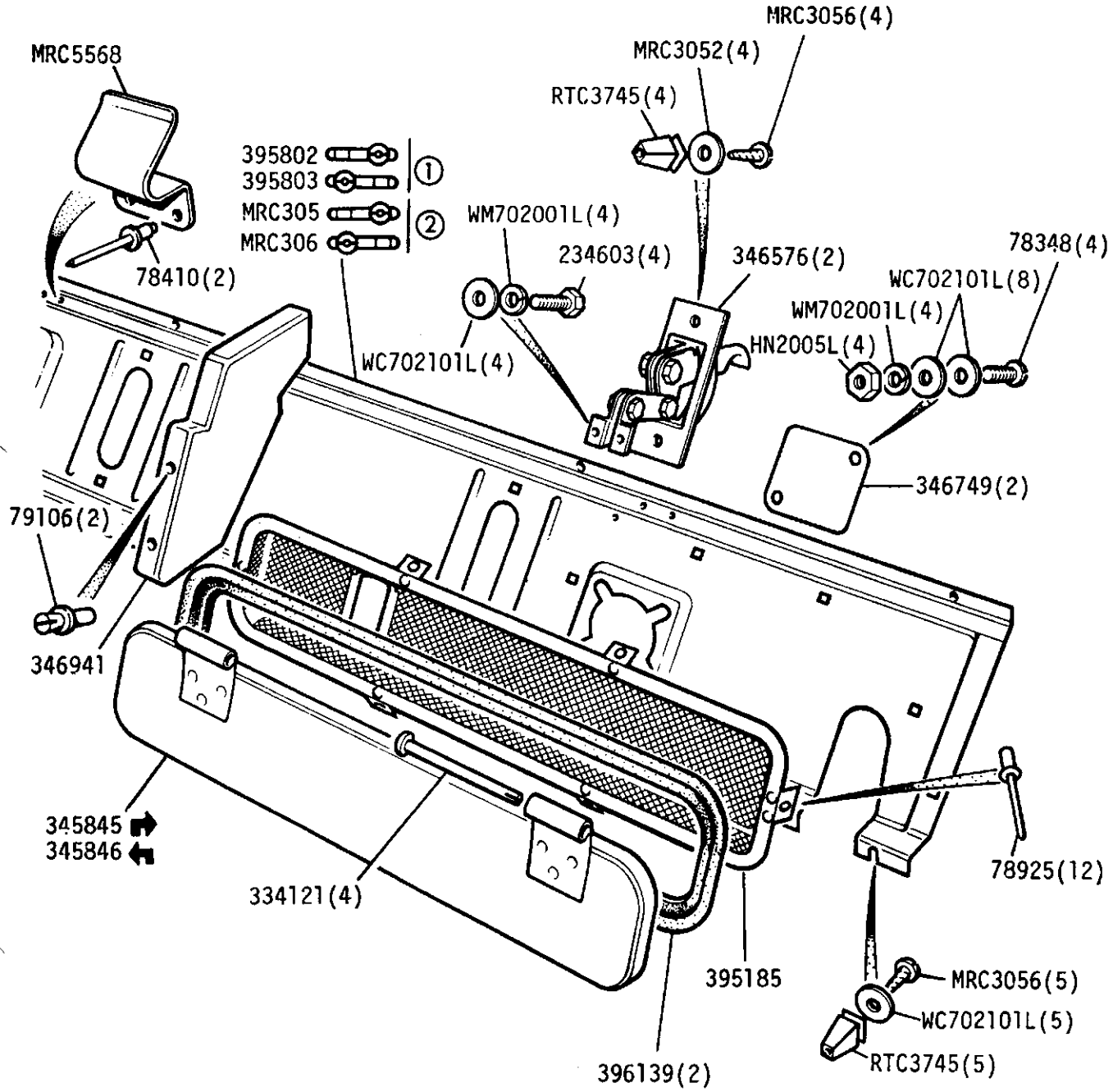

① Up to October 1975
② From November 1975 onwards

GROUP L
BODY - Windscreen

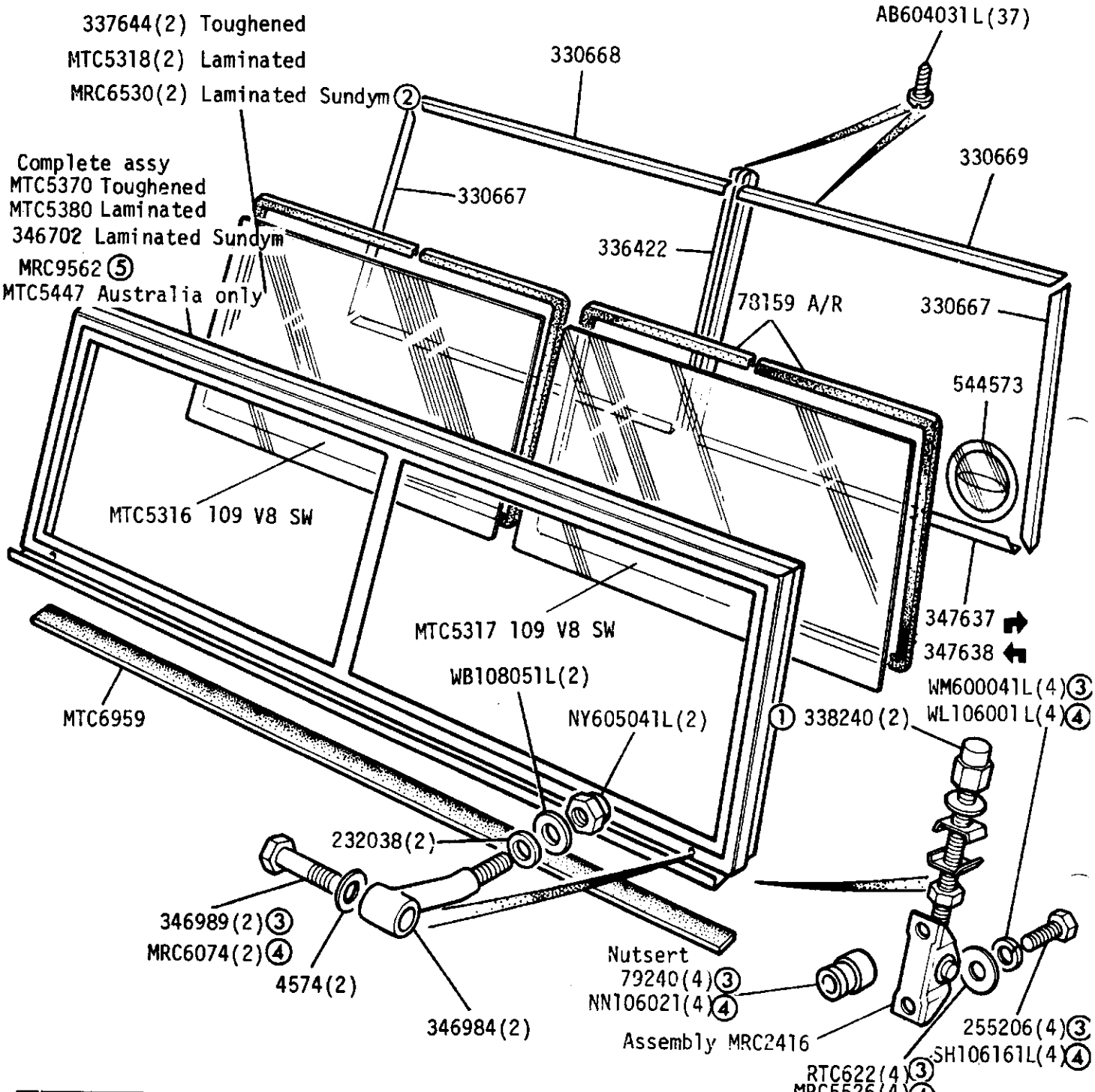

① Early models
② Except 109 V8 SW
③ UNF
④ Metric
⑤ County Station Wagon and 109 V8

GROUP L
ODY - Front Floor 2¼ Litre Petrol and Diesel

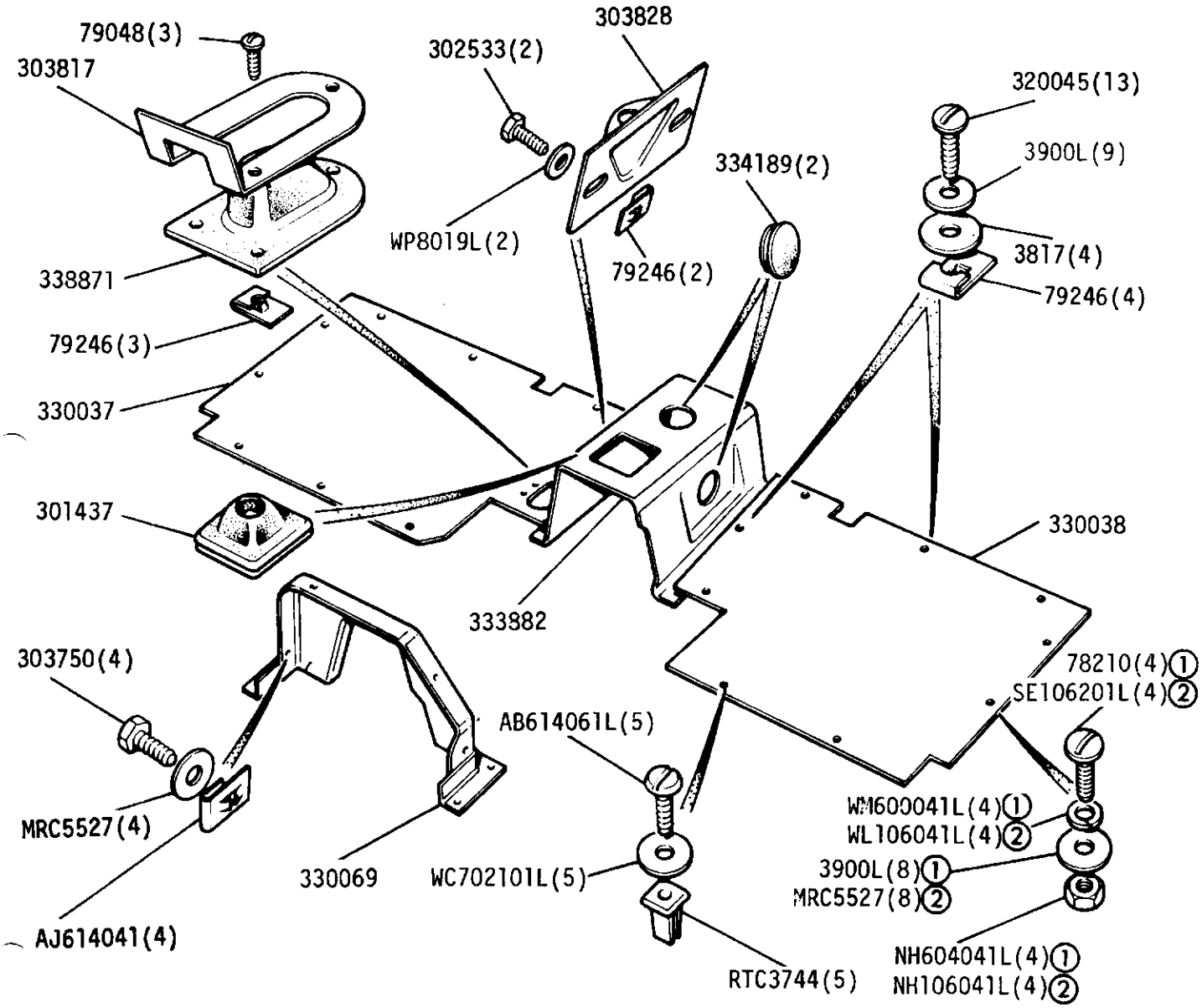

Note-When fitting MRC6080 Dash assembly
to 4 cyl vehicles, MRC4135 Bridge plate) Also
MRC5357 Gearbox diaphragm panel) required

① UNF
② METRIC

GROUP L
BODY - Front floor 109 V8

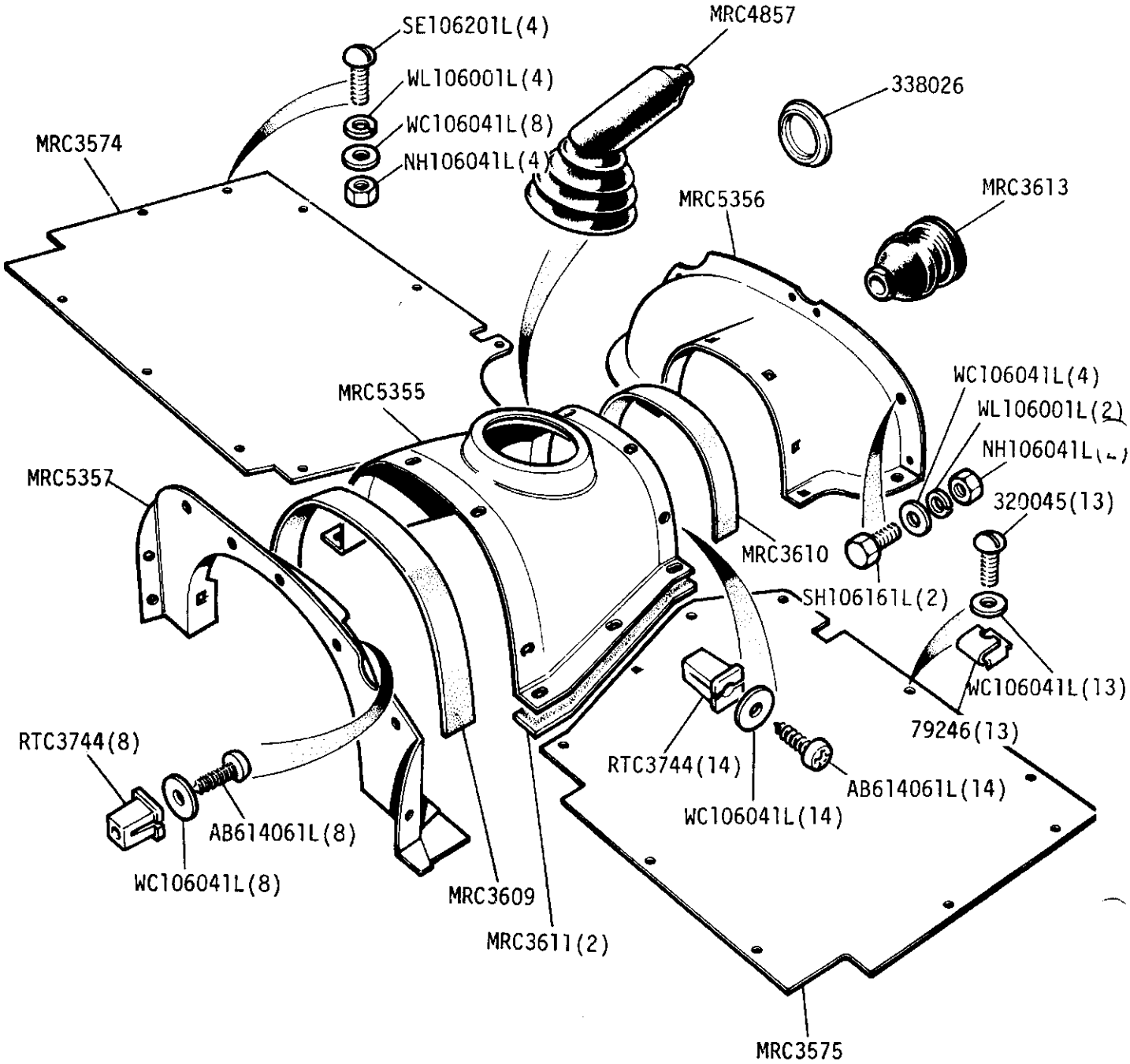

MRC7044 Cover - tunnel
MRC4447 Cover - dash centre

GROUP L
BODY - Front Floor 2.6 Litre Petrol

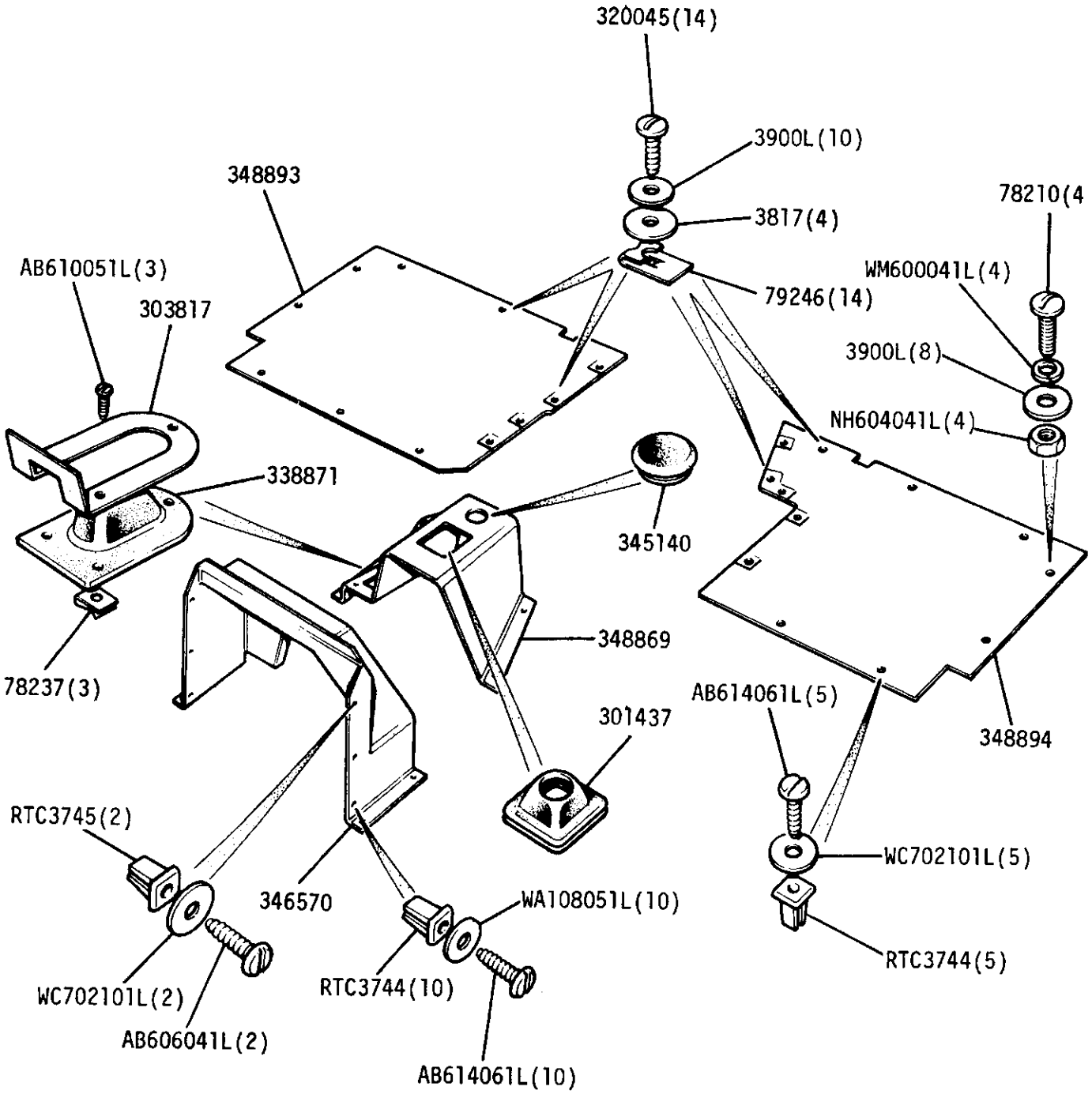

GROUP L
BODY - Seat Base

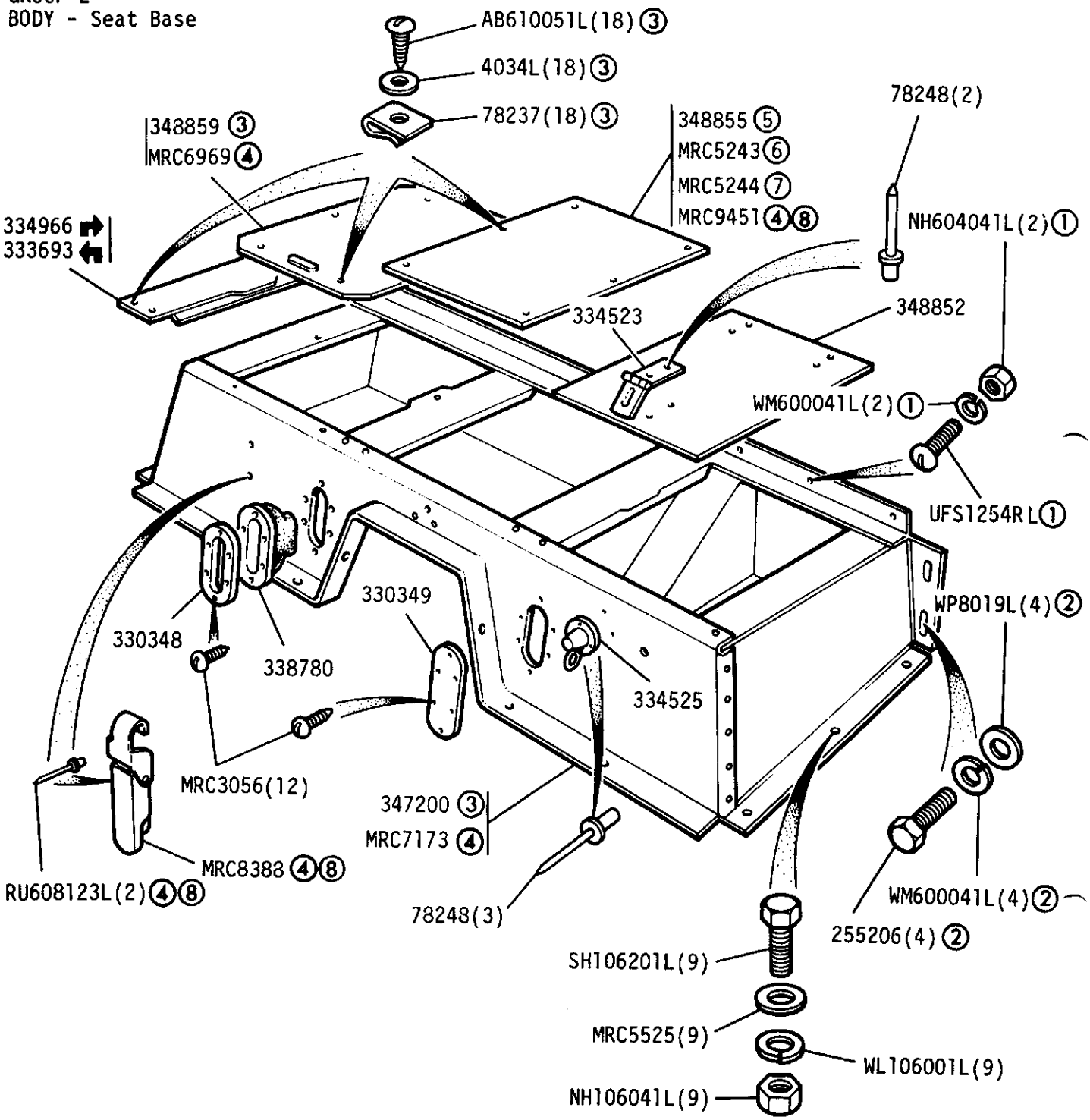

① For redundant holes in rear stiffener
② 109in Station Wagon
③ Except 109 V8
④ 109 V8
⑤ Up to August 1982
⑥ EEC vehicles from September 1982
⑦ Non - EEC vehicles from September 1982
⑧ Required when extra fuel tank is fitted.

109 V8:
- Seat base assy (without LH side locker) - MRC7174
- Battery base - MRC7175
- Seat - battery compartment - MRC9477
- Locating angle - MRC8135

GROUP L
CHASSIS - Front lifting and towing rings 109 V8

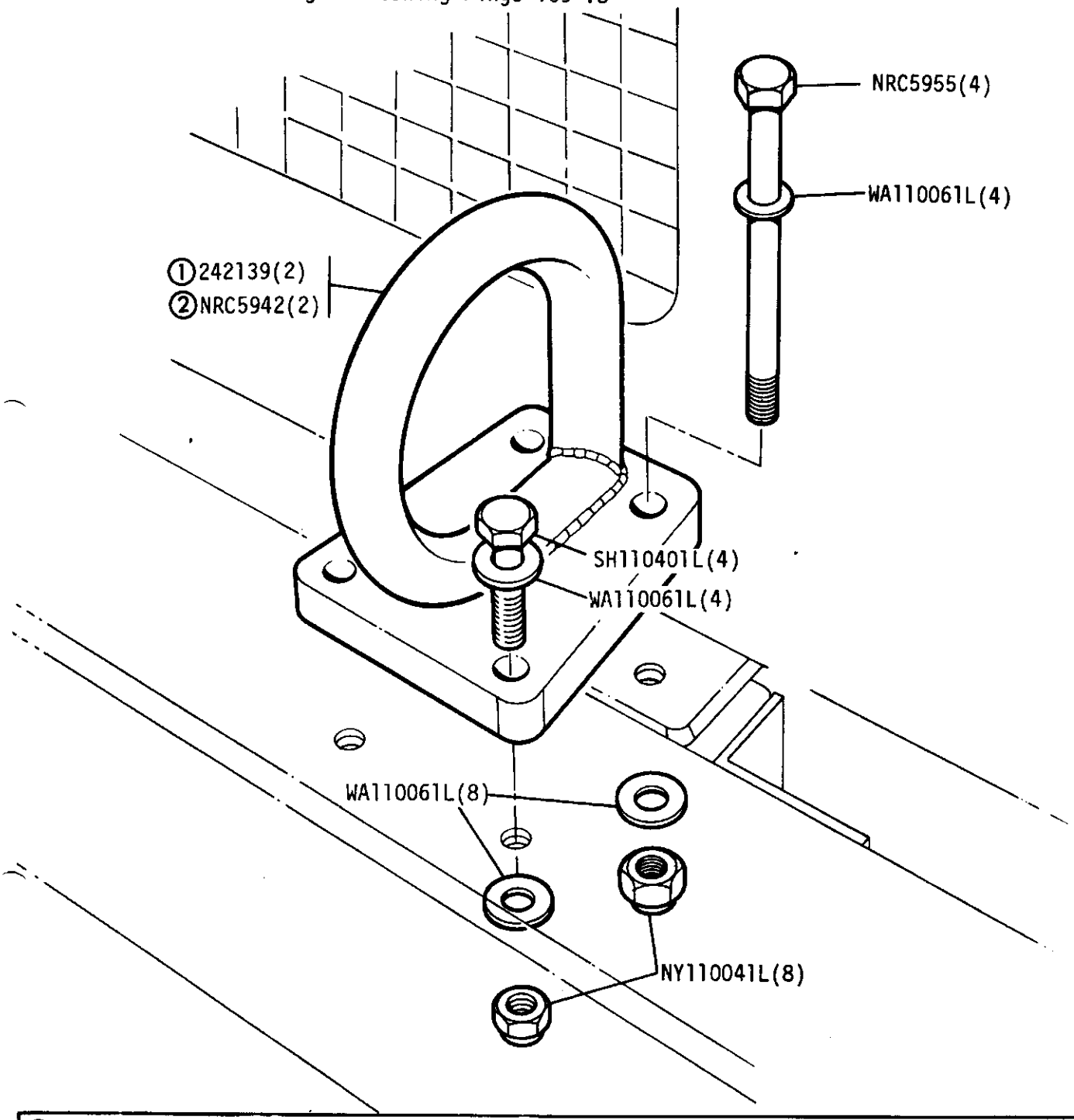

① Up to May 1980
② From June 1980 Onwards

GROUP L
BODY - Sill Panels

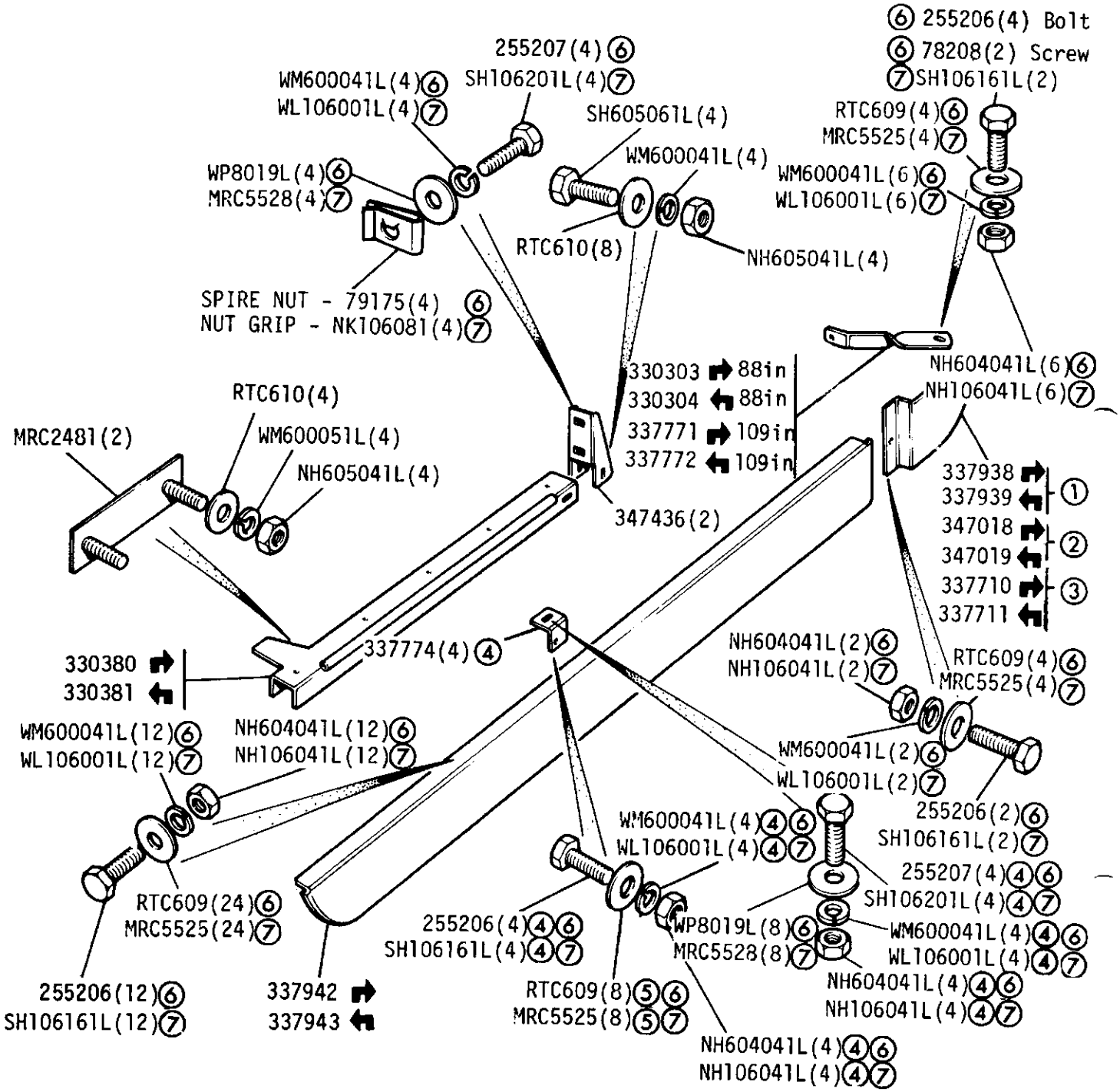

① 88in
② 109in
③ 109in Station Wagon
④ 6 off on 109in Station Wagon
⑤ 12 off on 109in Station Wagon
⑥ UNF
⑦ METRIC

GROUP L
BODY - Front Door

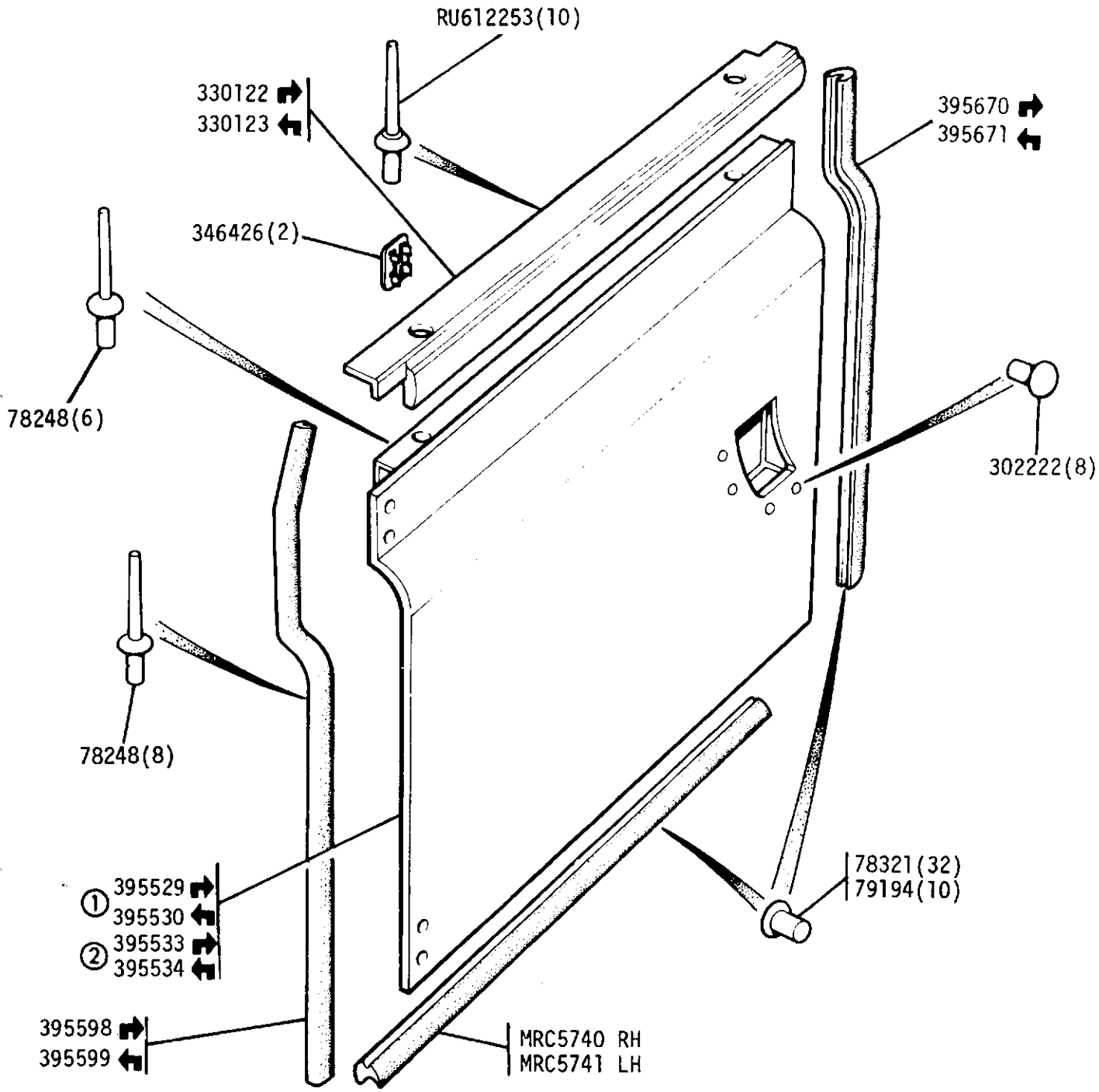

① EXCEPT 109 V8
② 109 V8

ONE PIECE DOOR SEALS RH MTC4112
LH MTC4113

GROUP L
BODY - Windows, Channels and Side Screens - Front Door

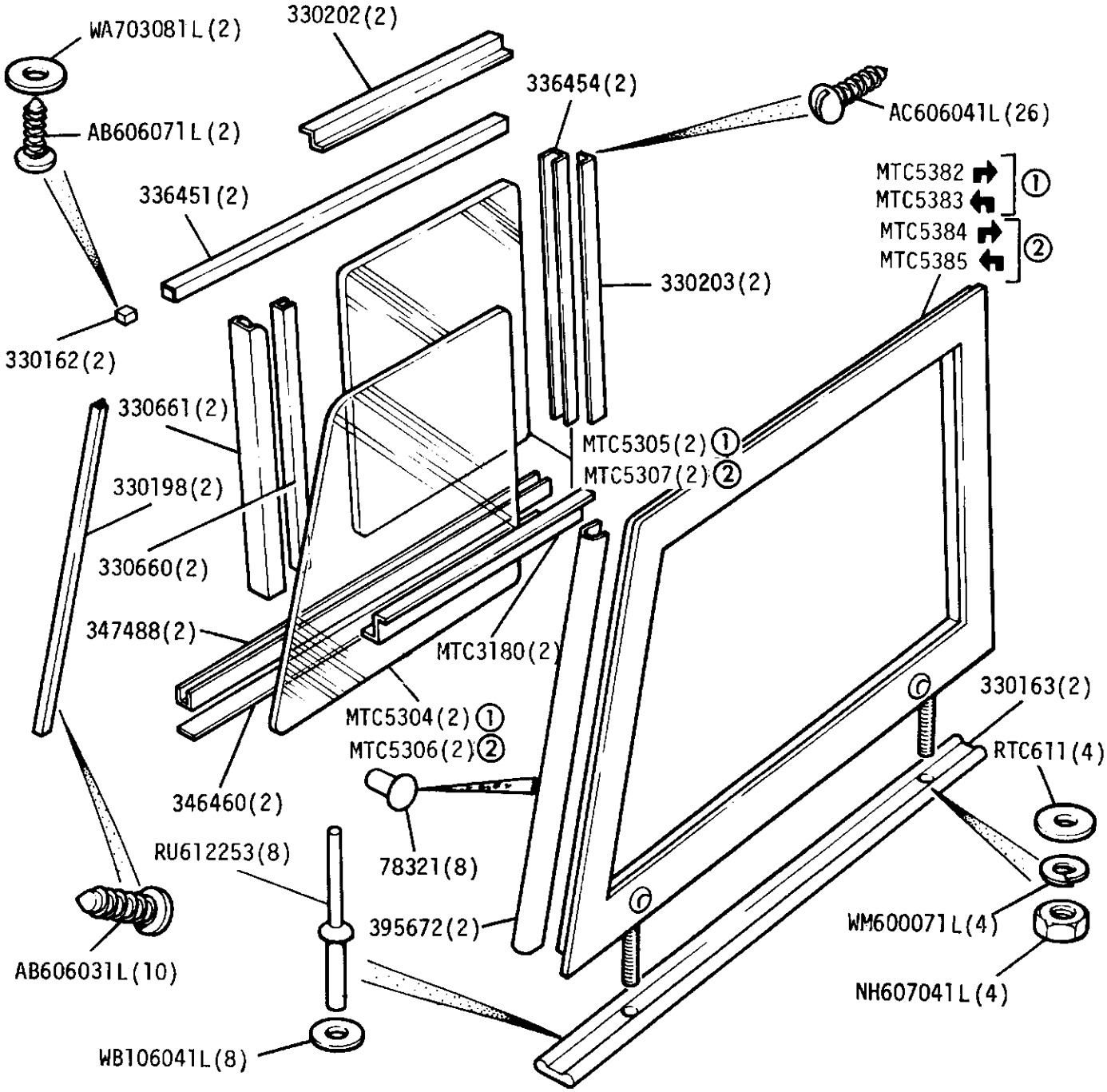

① Clear glass
② Sundym glass

GROUP L
BODY - Locks - Front Door

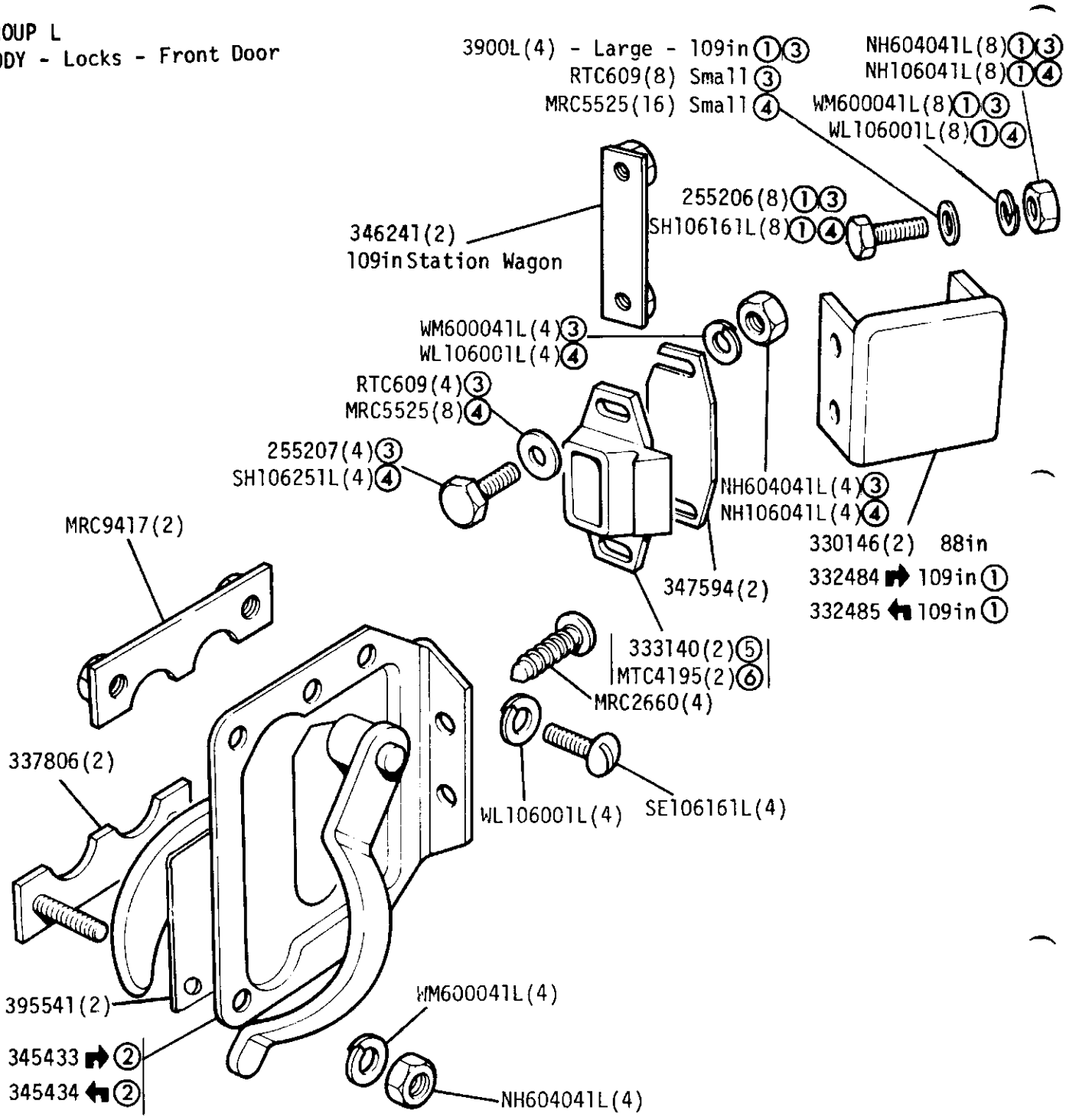

① Not required for 109in Station Wagon

② Alternative to key operated locks on adjacent frame

③ UNF

④ METRIC

⑤ Upto November 1981

⑥ From December 1981

GROUP L
BODY - Private locks and sliding window catch front doors

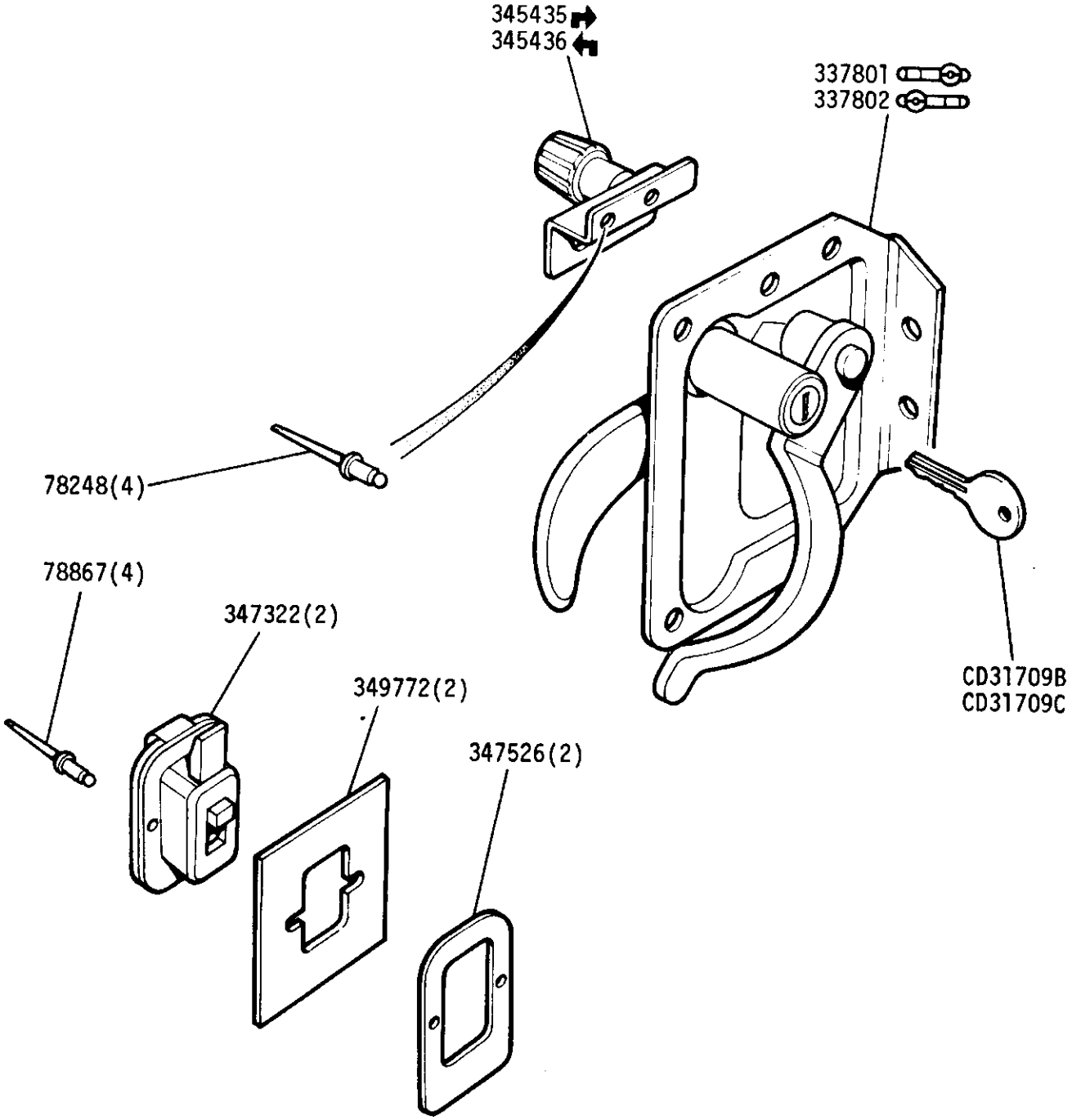

Alternative to locks on adjacent frame

Seal, window catch - MTC3118(2)

GROUP L
BODY - Hinges and Straps - Front door

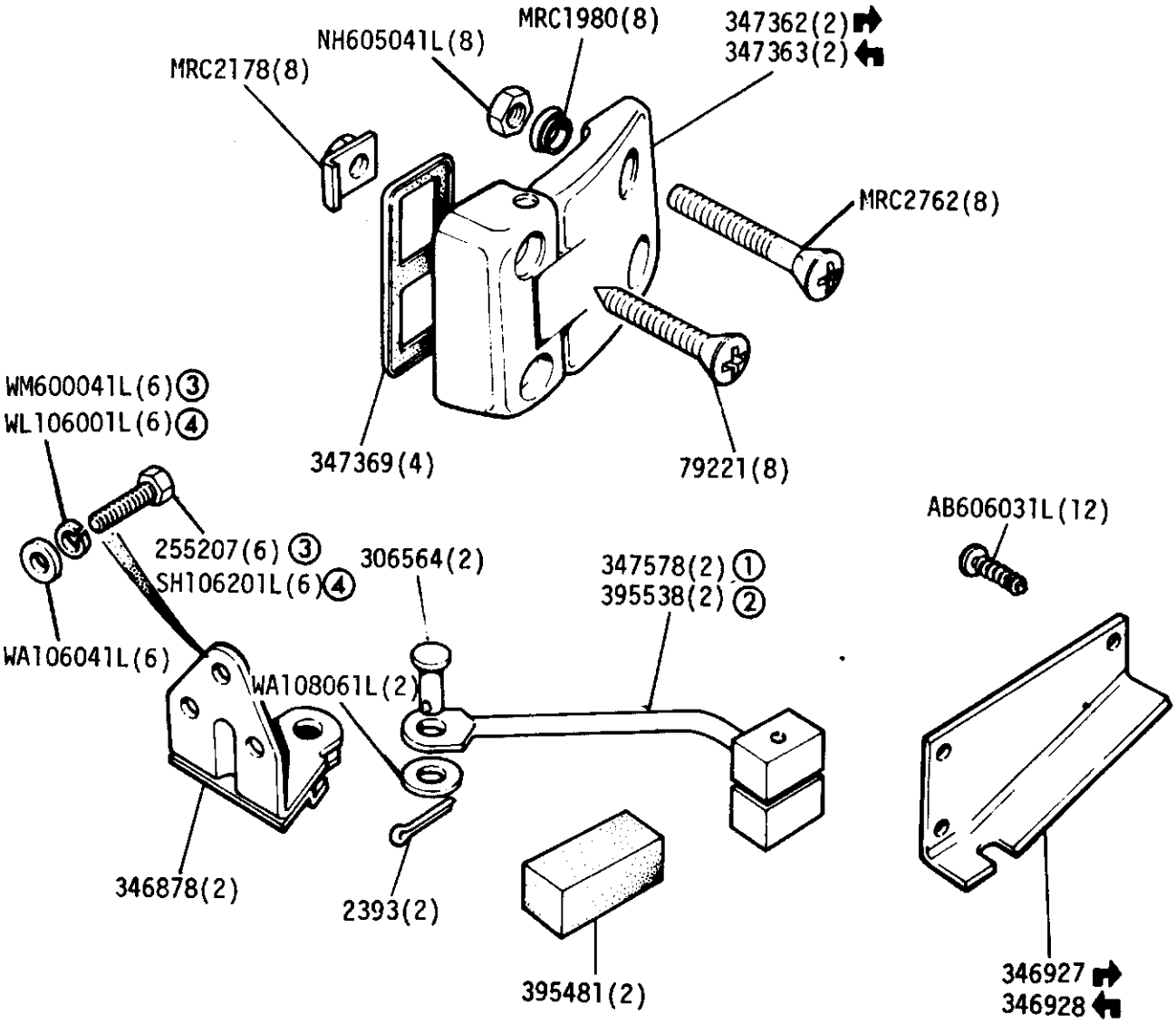

① Up to 19th September 1972
② From 20th September 1972 onwards
③ UNF
④ METRIC

GROUP L
BODY - Rear Side Door and Frame - 109in Station Wagon

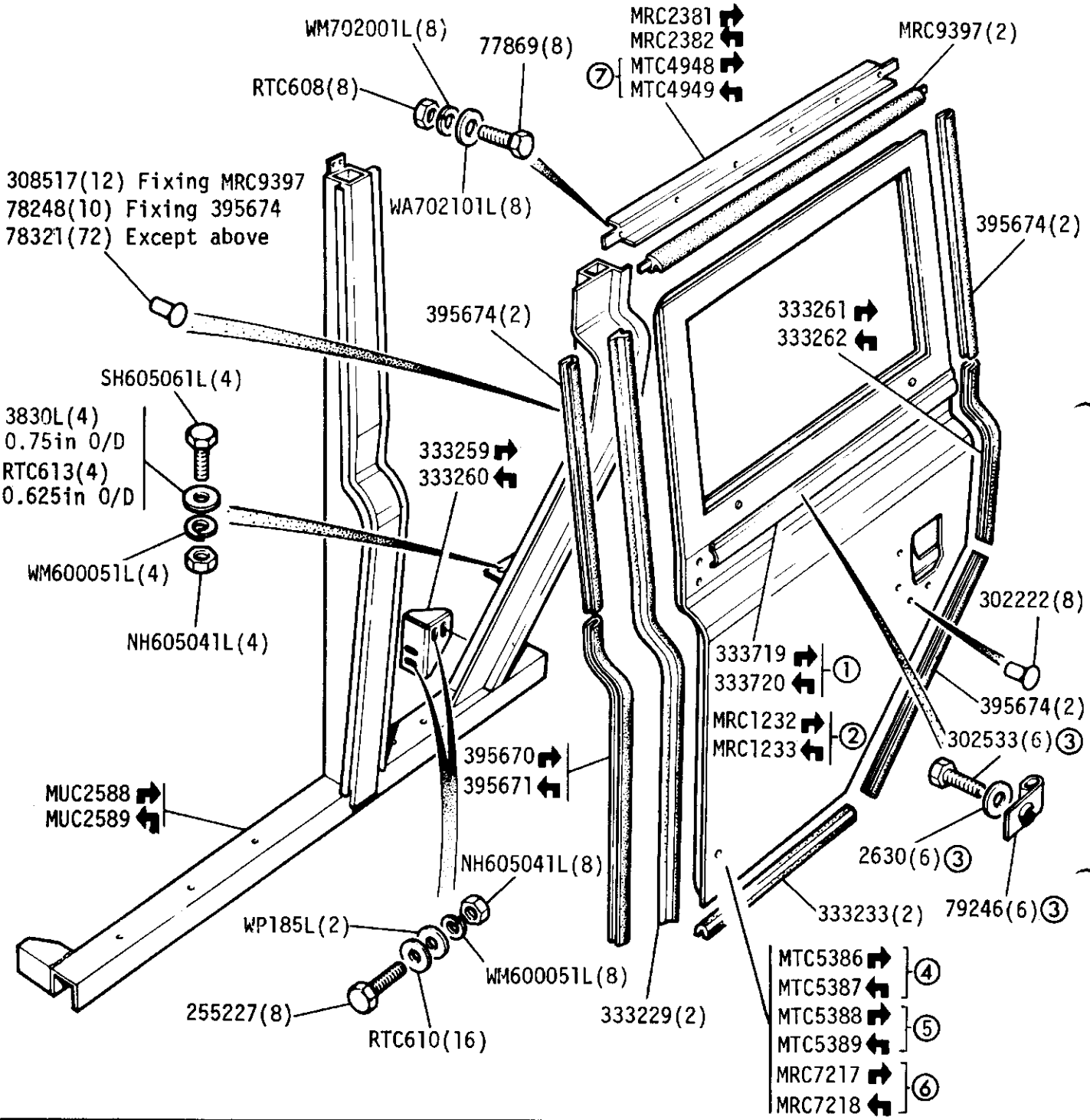

① Mouldings with 4 fixing points
② Moulding with 3 fixing points
③ 6 off required with 3 fixing point mouldings
④ Except 109 V8
⑤ 109 V8
⑥ 109V8 'County' Station Wagon
⑦ For One Piece door seals

ONE PIECE DOOR SEALS MTC4114 MTC4115

GROUP L
BODY - Sidescreen - Rear Side Door - 109in Station Wagon

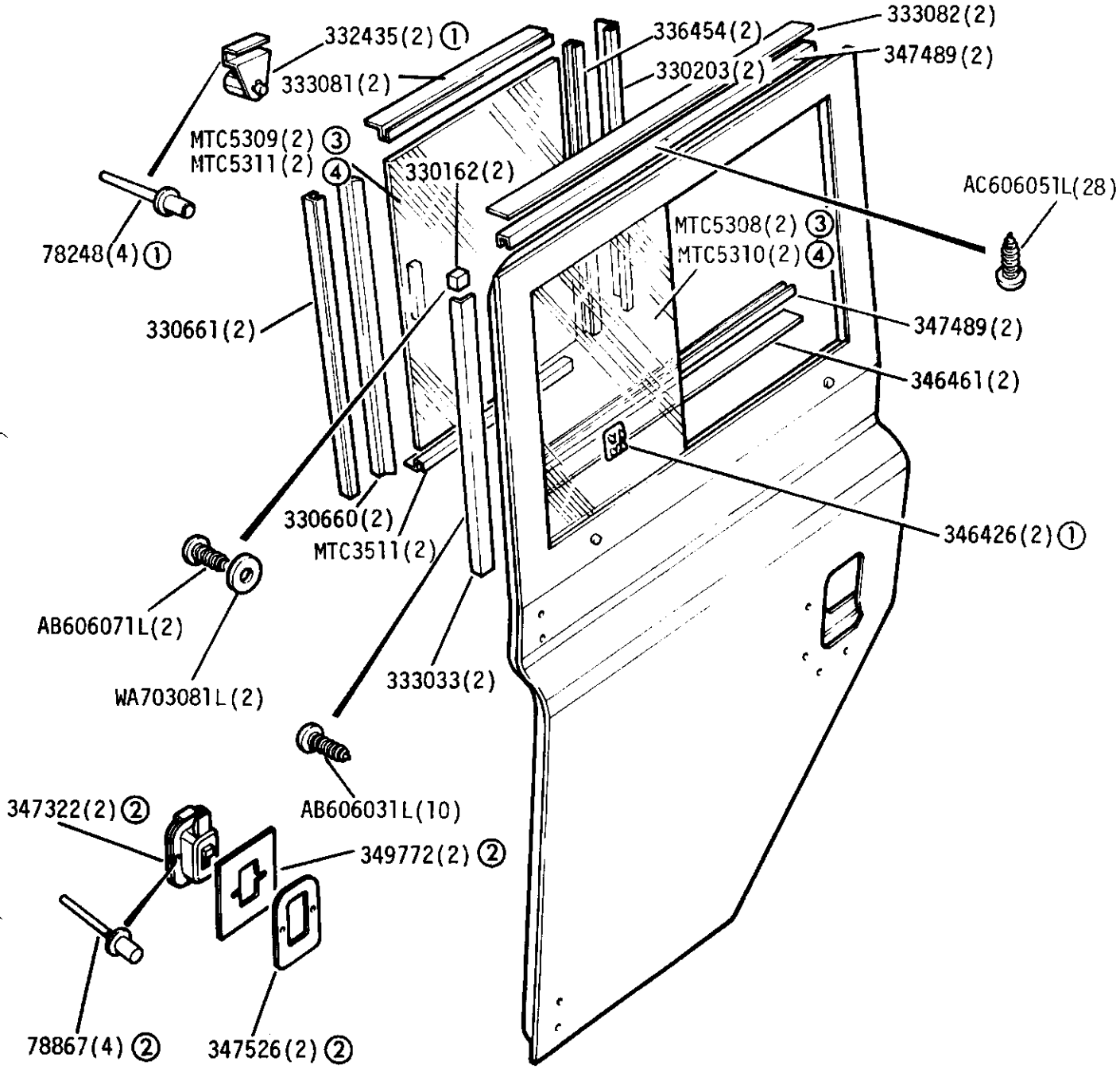

① Up to August 1972
② From September 1972 onwards
③ Except 109 V8 SW
④ 109 V8 SW

Seal, window catch - MTC3118(2)

GROUP L
LOCKS - Rear Side Door - 109in Station Wagon

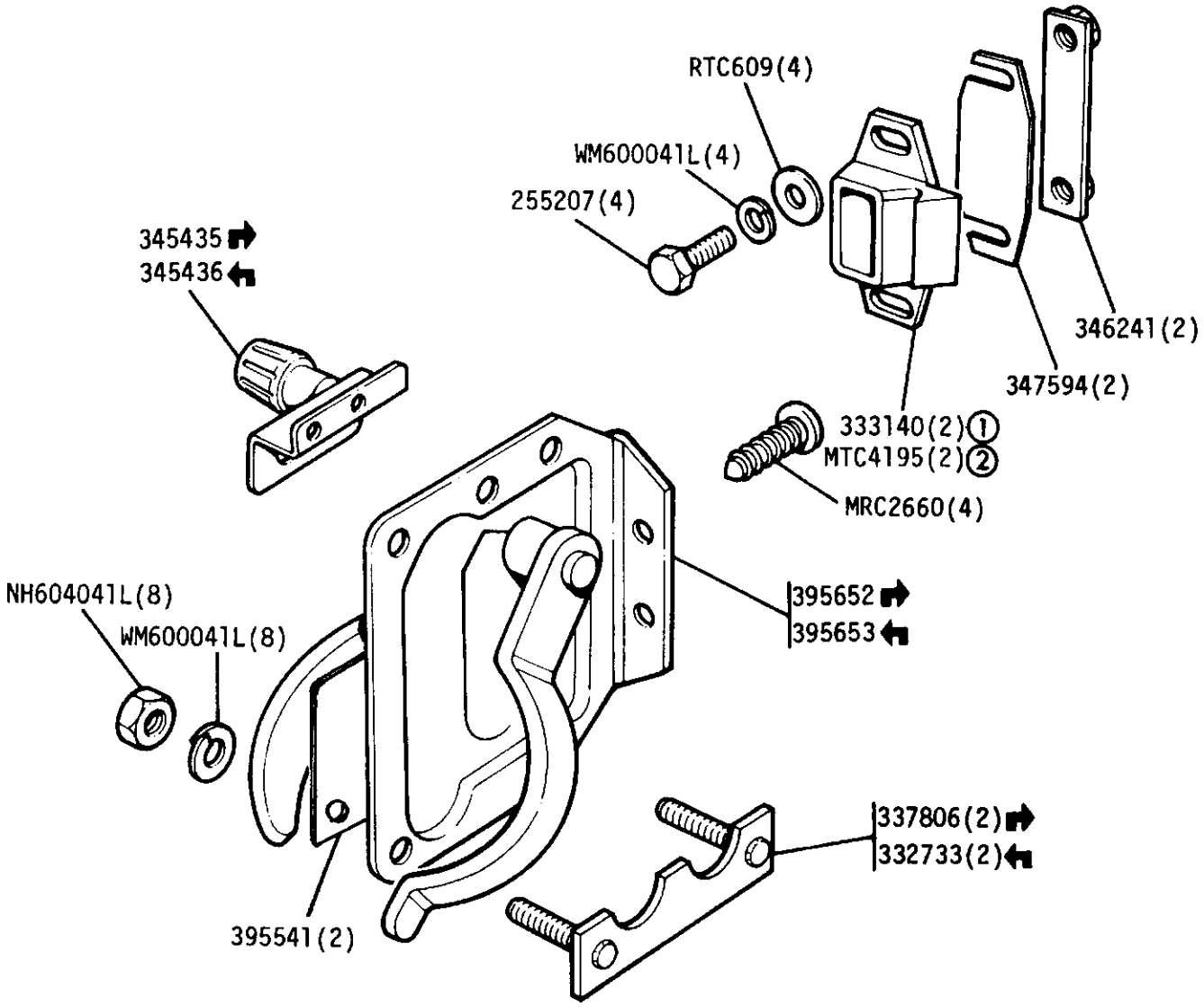

①Upto November 1981
②From December 1981

BODY - Hinges and Check Strap - Rear Side Doors - 109" Station Wagon

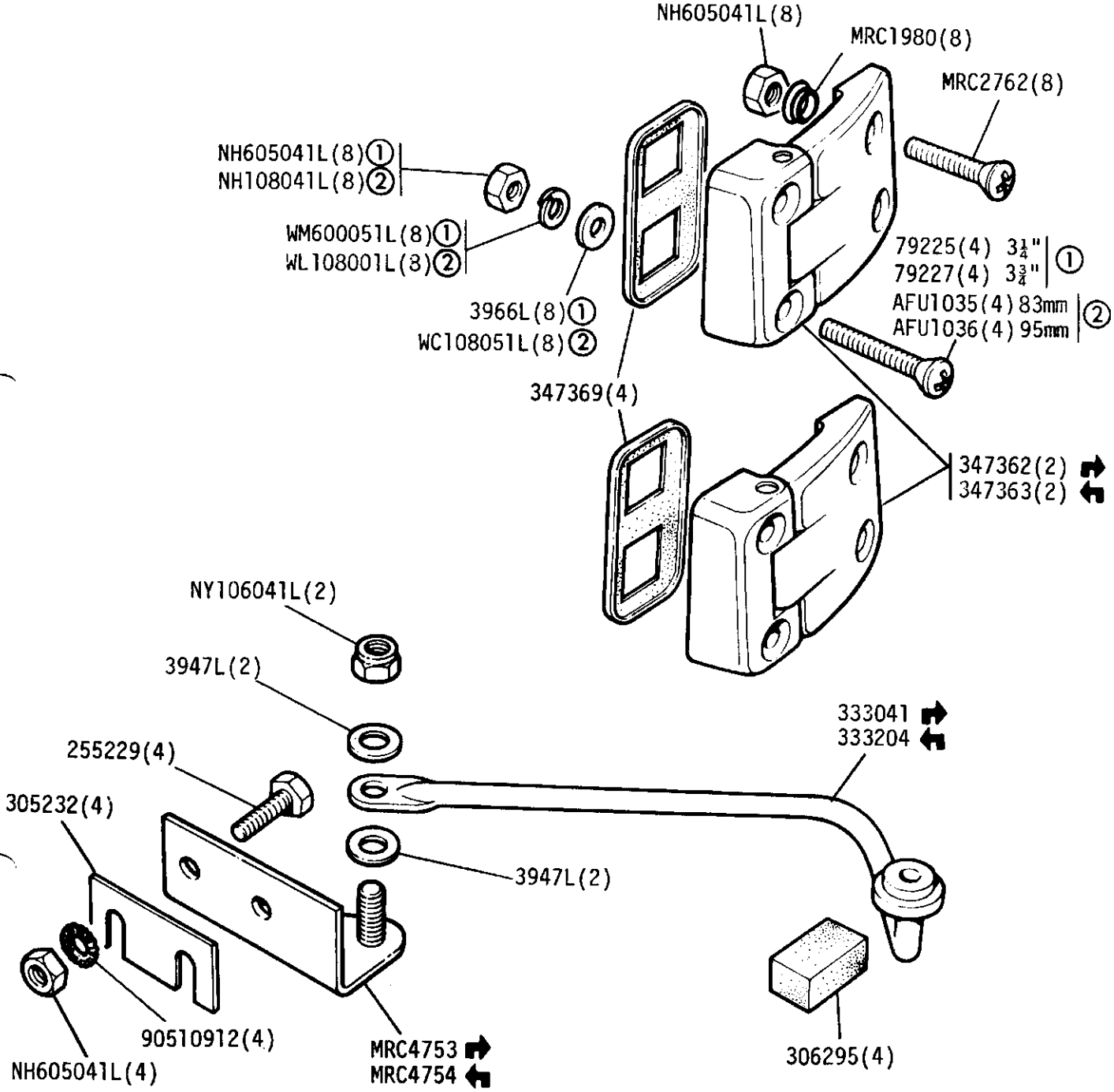

① UNF Fixings

② Metric Fixings

GROUP L
BODY - Rear Body - 88in

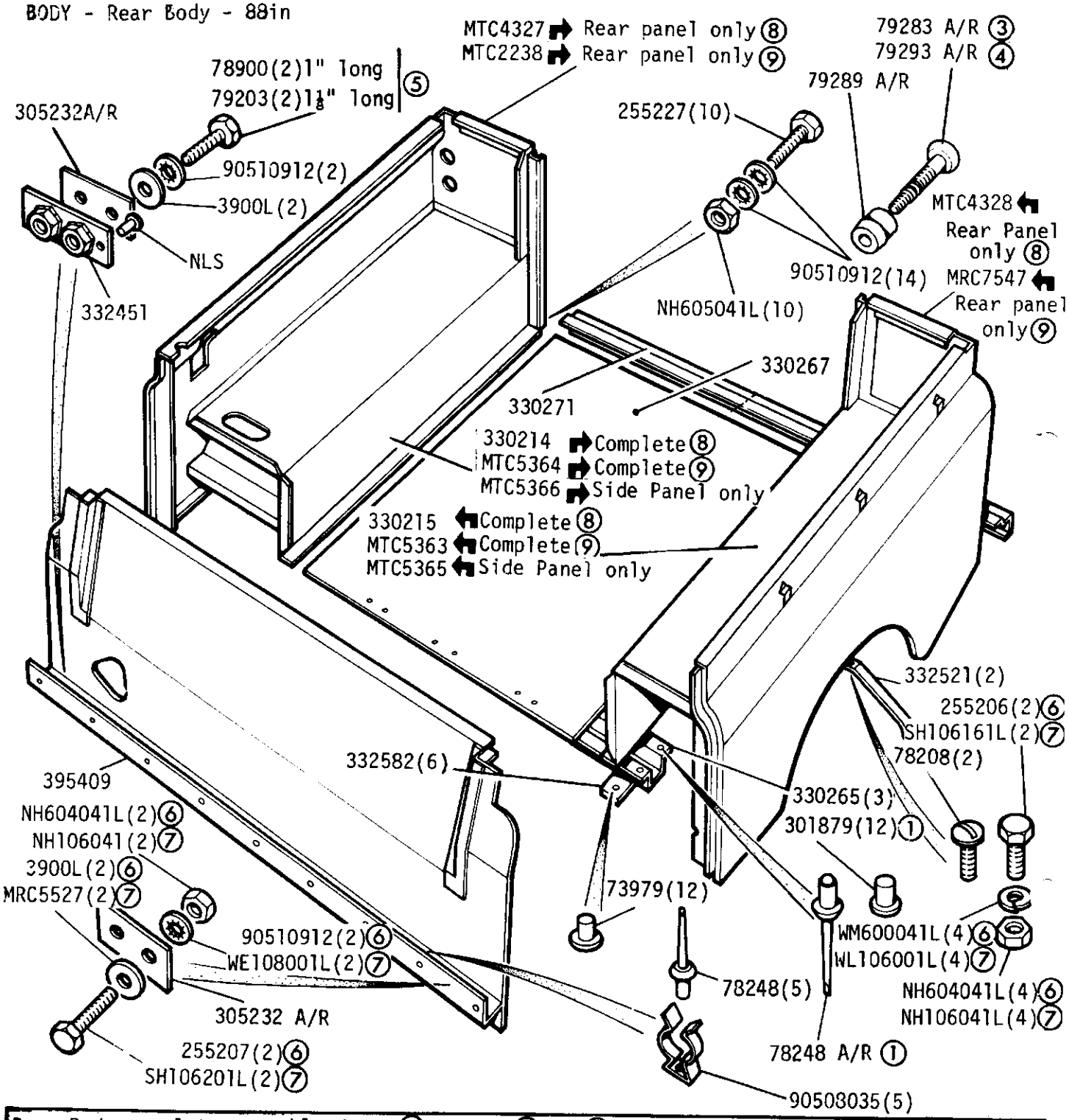

Rear Body complete assembly 320863 ⑧ MTC5360 ⑨

⑧ Original tail lamp arrangement
⑨ Modified tail lamp arrangement

① Rivets fitted up to July 1973
② Pins and Collars from August 1973 onwards
③ Dome head
④ Countersunk head
⑤ Alternatives
⑥ UNF
⑦ METRIC

GROUP L
BODY - Cover Panels and Spare Wheel Clamp - Rear Body 88in

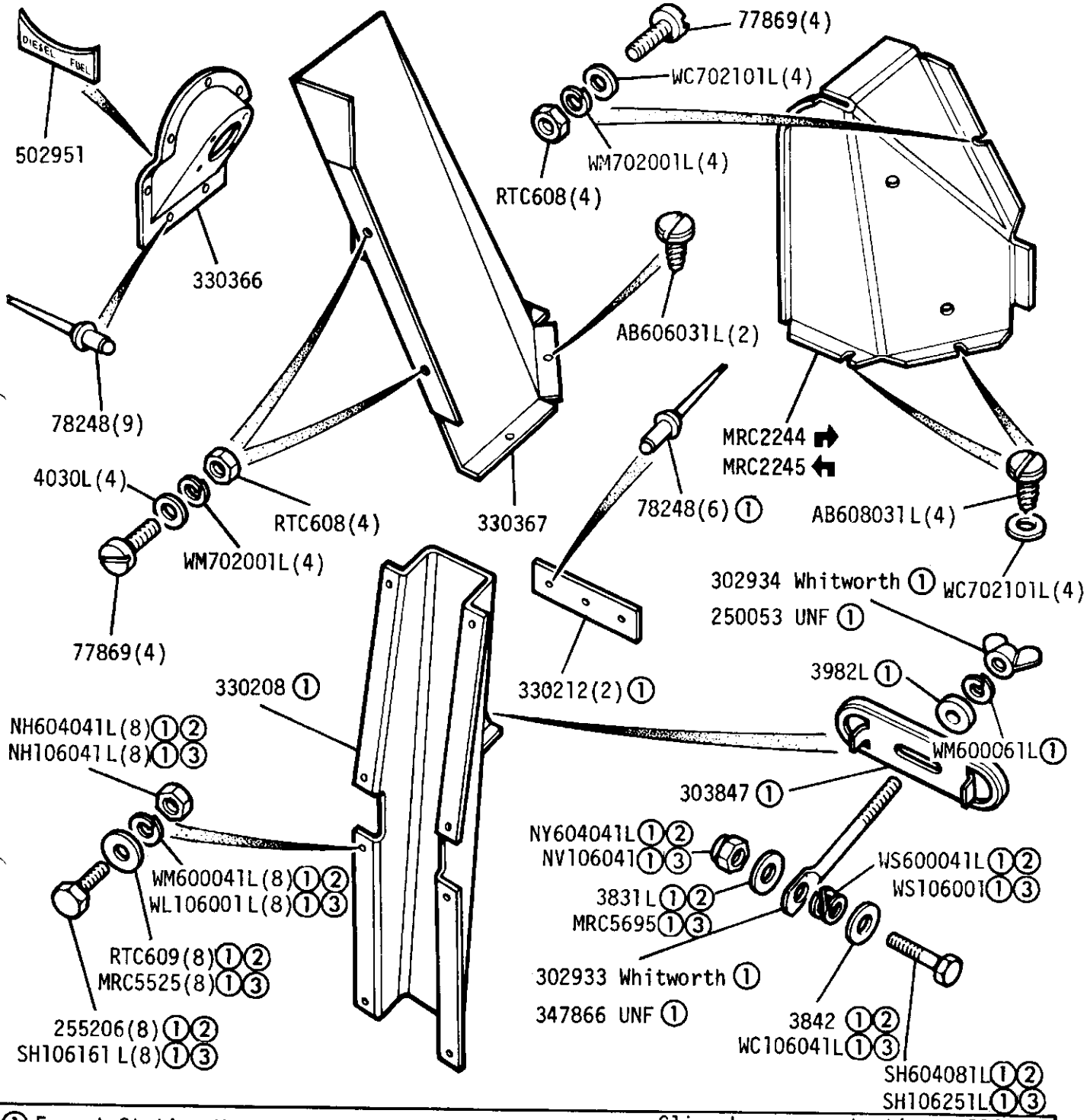

① Except Station Wagon
② UNF
③ METRIC
④ Alternatives

Clip, harness retention - PRC3537
Plastic flange finisher, harness protection - 570753

Jack retaining bracket - 367030
Rivet - RU612183(2)
Retention ring - 371144 ④
Retention ring - NRC9101

GROUP L
BODY - Capping - 88in

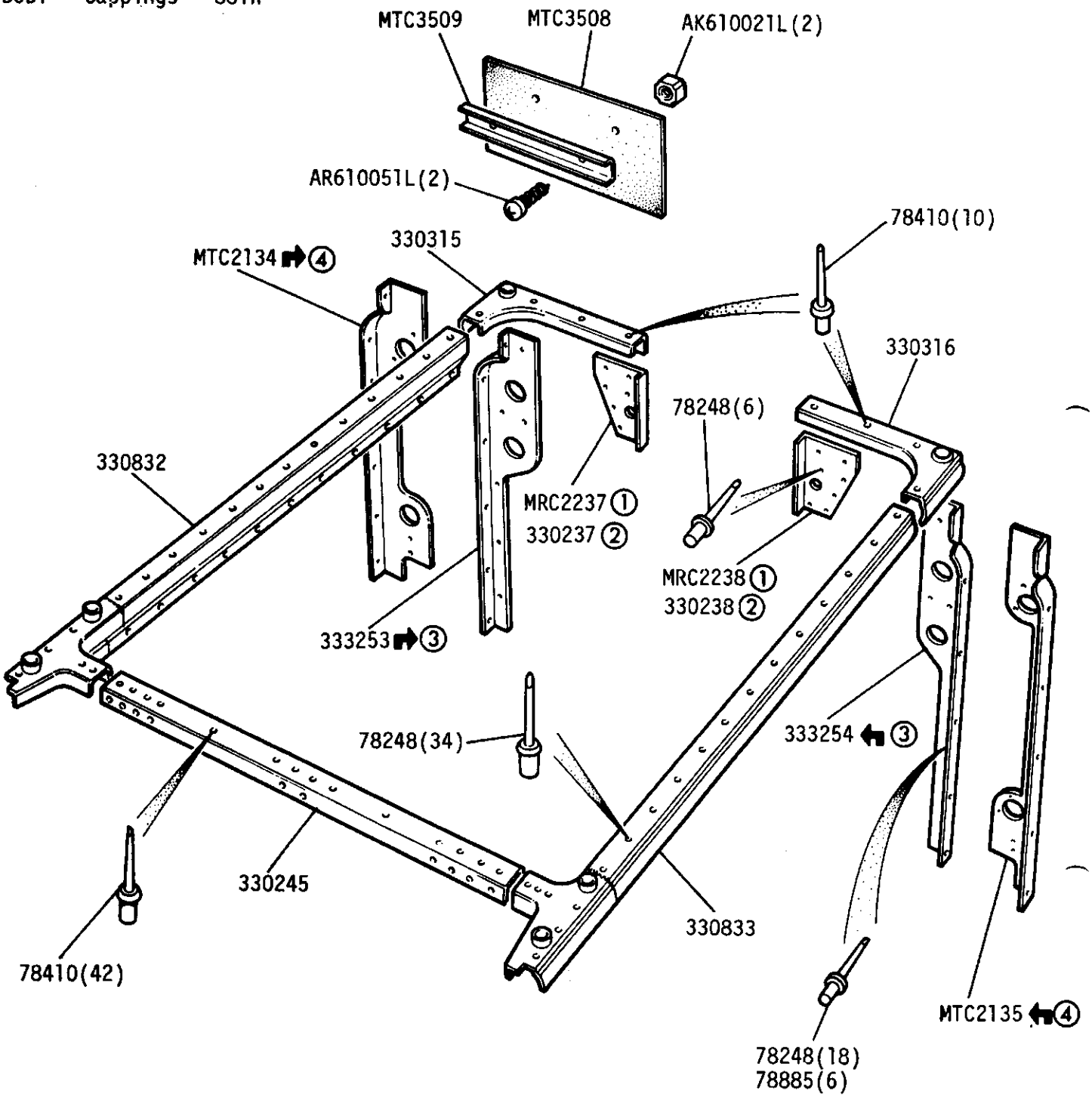

①Except Station Wagon
②Station Wagon
③Original tail lamp arrangement
④Modified tail lamp arrangement

GROUP L
BODY - Tailboard Fixings and Rear Name Plate - 88in

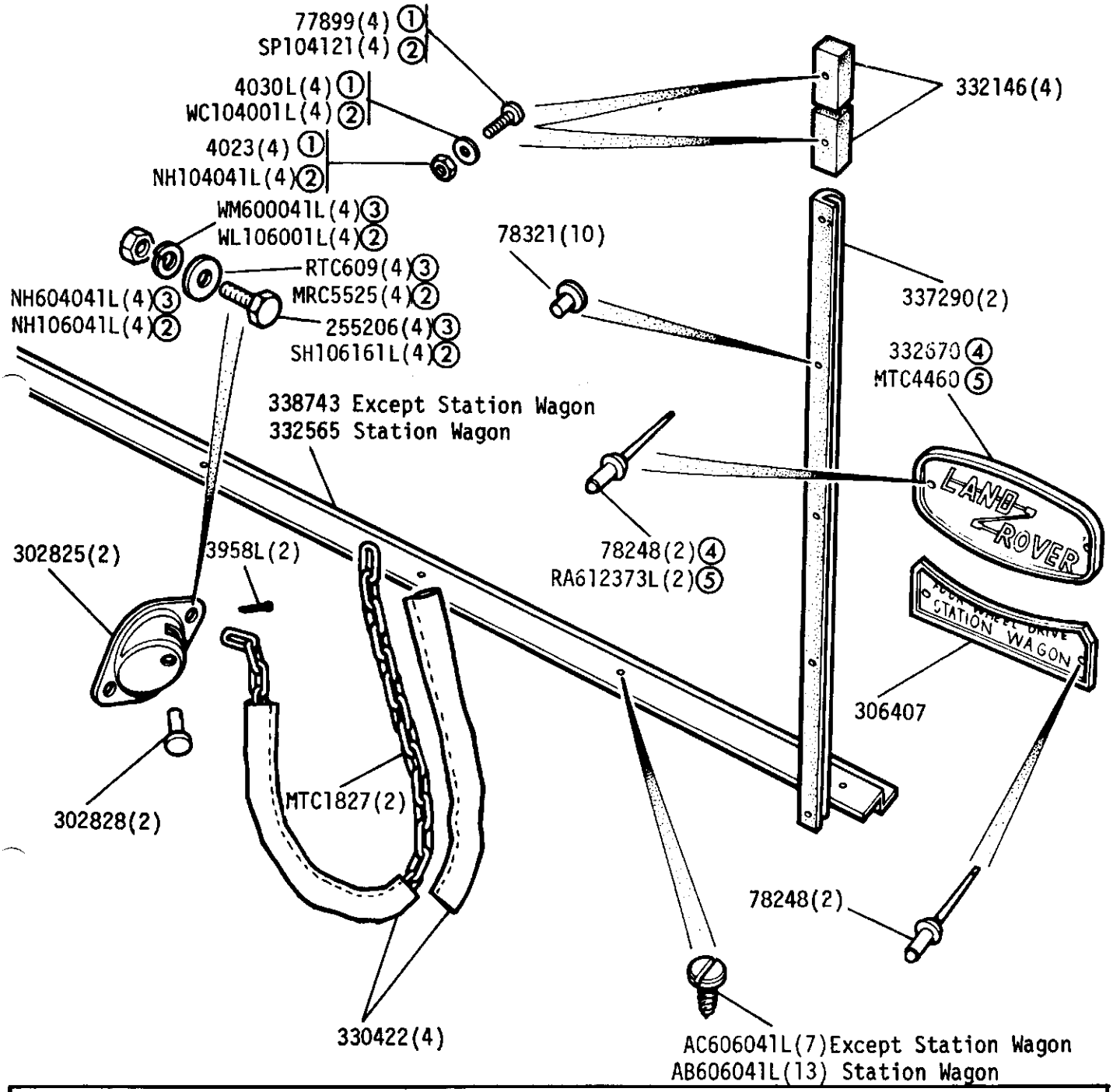

① BA Fixings) Alternatives
② Metric Fixings)
③ UNF Fixings)
④ Fitted upto SALLDHAH7AA186336
⑤ Fitted from SALLDHAH7AA186337 onwards

GROUP L

BODY - Rear Body - 109in except Station Wagon up to vehicle suffix 'B' inclusive

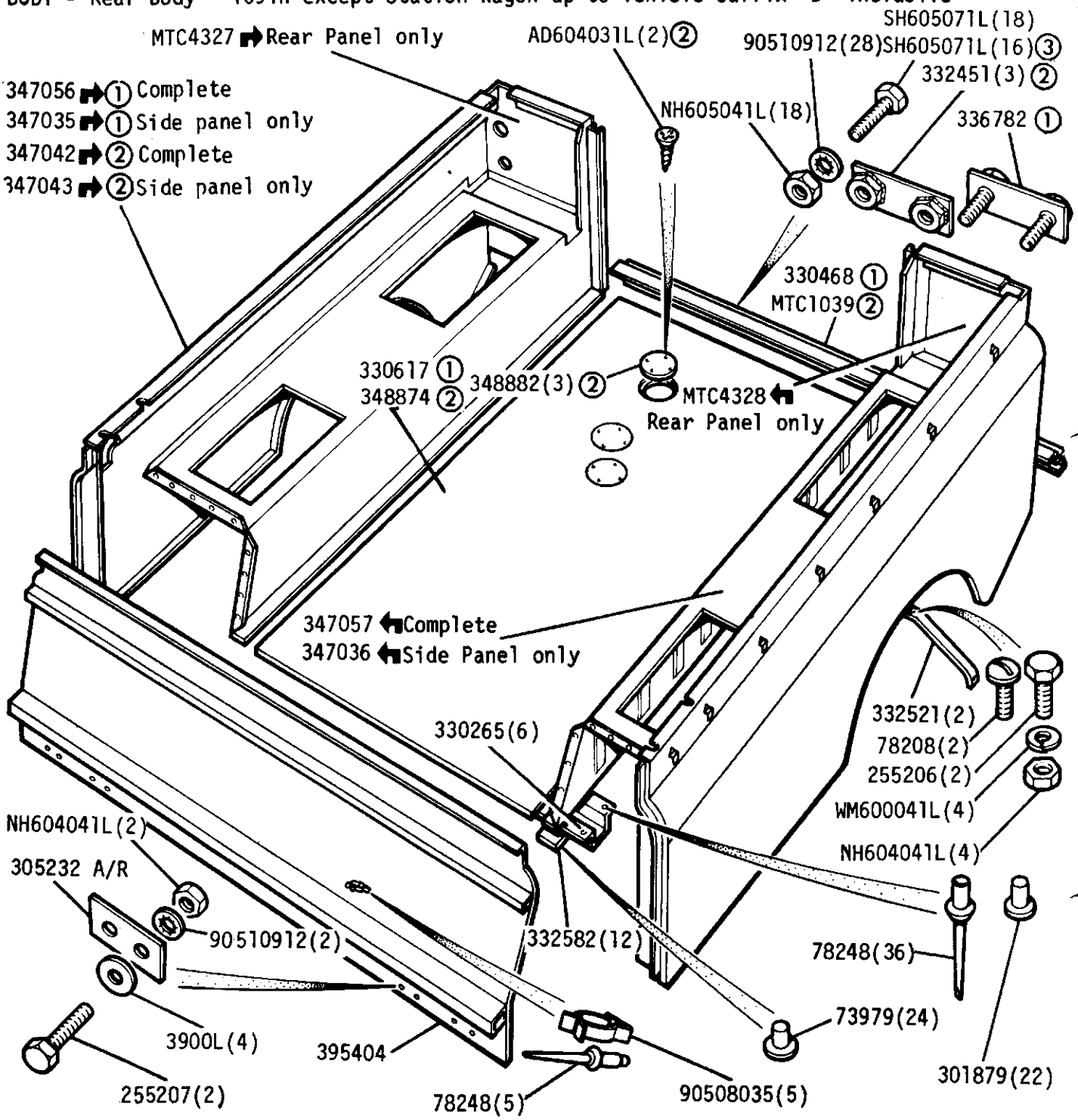

Rear body complete assembly 320861 4 Cylinder
Rear body complete assembly MTC5343 6 Cylinder

① 4 Cylinder
② 6 Cylinder
③ Required when additional fuel tank is fitted

GROUP L

BODY - Rear Body - 109inexcept Station Wagon from vehicle suffix 'C' onwards

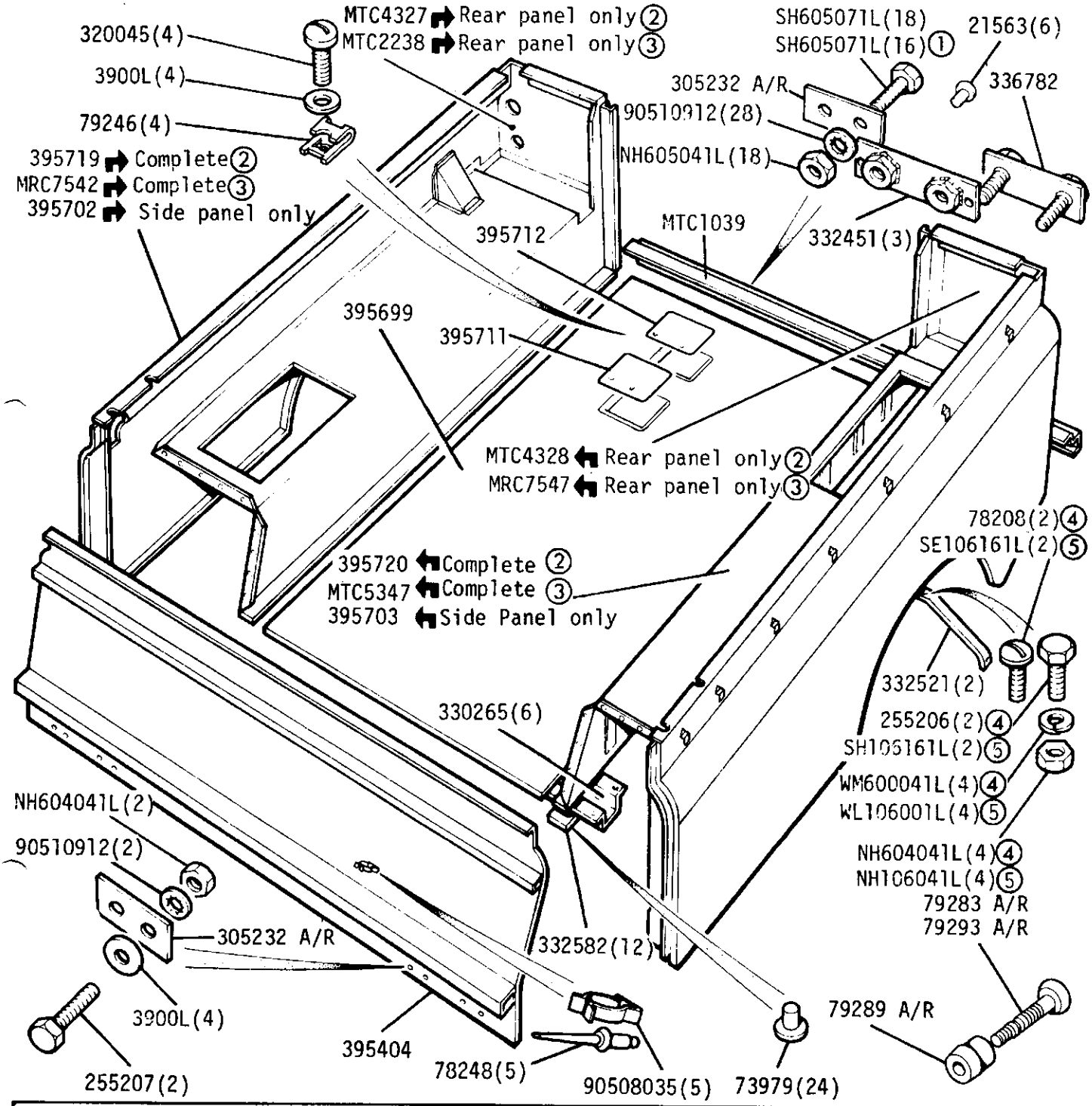

Rear body complete assembly MTC5343

Badge, Land-Rover V8, body side (2) MRC7425 109 V8

① **Required when additional fuel tank is fitted**
② Original tail lamp arrangement
③ Modified tail lamp arrangement
④ UNF
⑤ METRIC

GROUP L

BODY - Cover Panels - Rear Body - 109in except Station Wagon

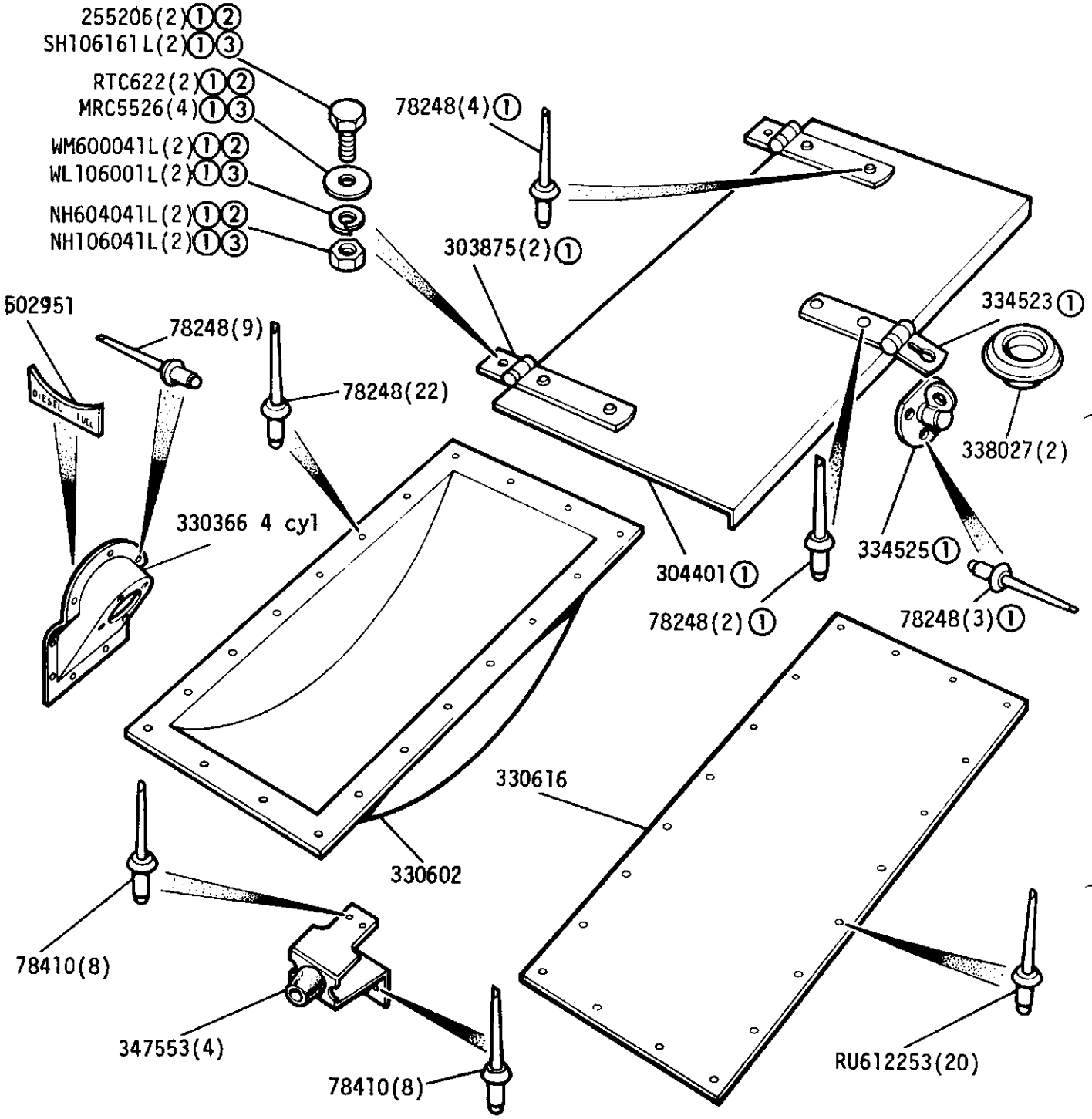

① Double quantities for 4 cylinder up to vehicle suffix 'B' inclusive

② UNF

③ METRIC

④ Alternatives

Clip, harness retention - PRC3537

Plastic flange finisher, harness protection - 570753

Jack retaining bracket - 367030

Rivet - RU612183(2)

Retention ring - 371144 ④

Retention ring - NRC9101

GROUP L

BODY - Spare Wheel Mounting and Rear Lamp Cover Panels - 109in except Station Wagon

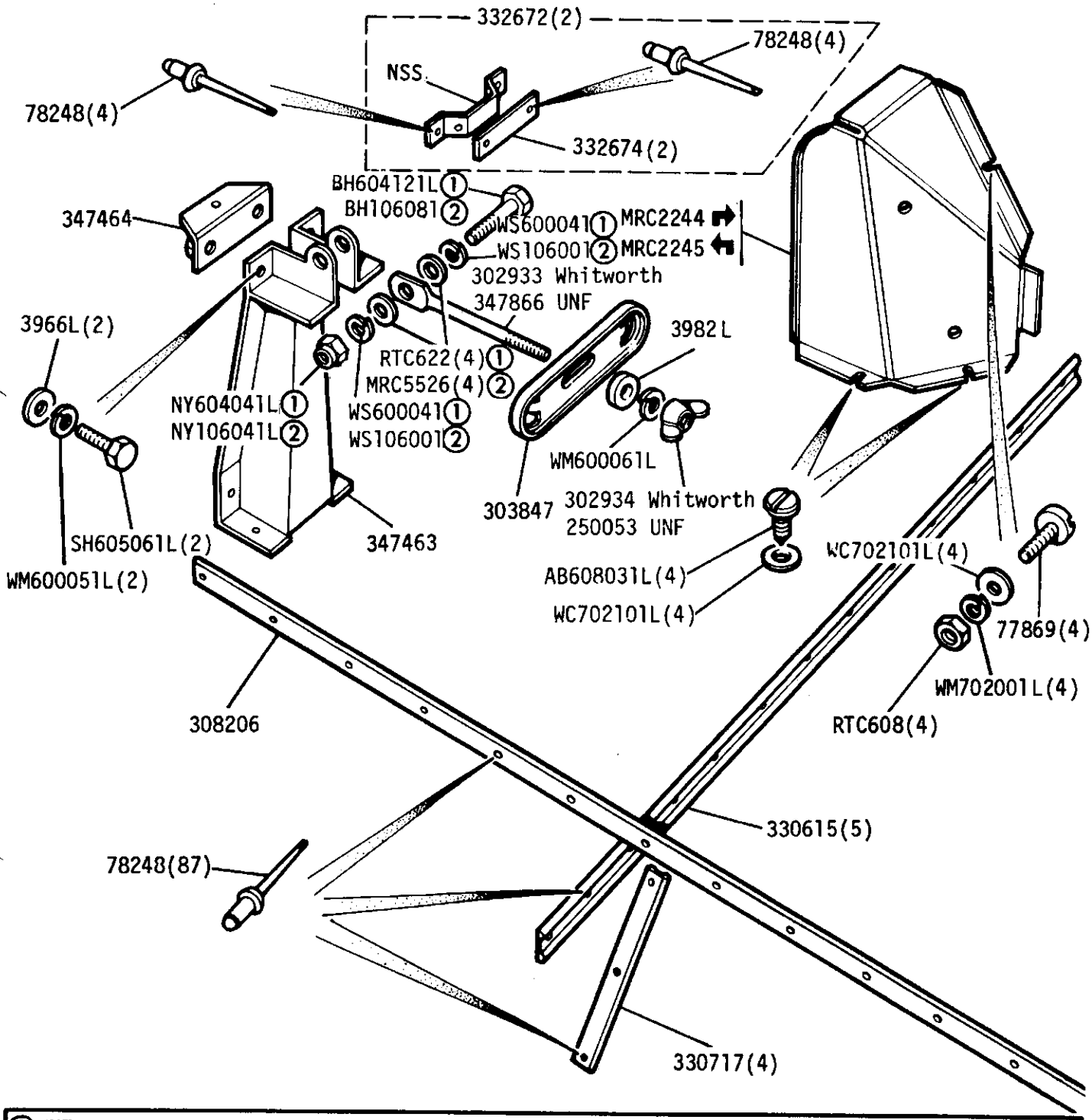

①UNF
②METRIC

GROUP L
BODY - Cappings - 109in Except Station Wagon

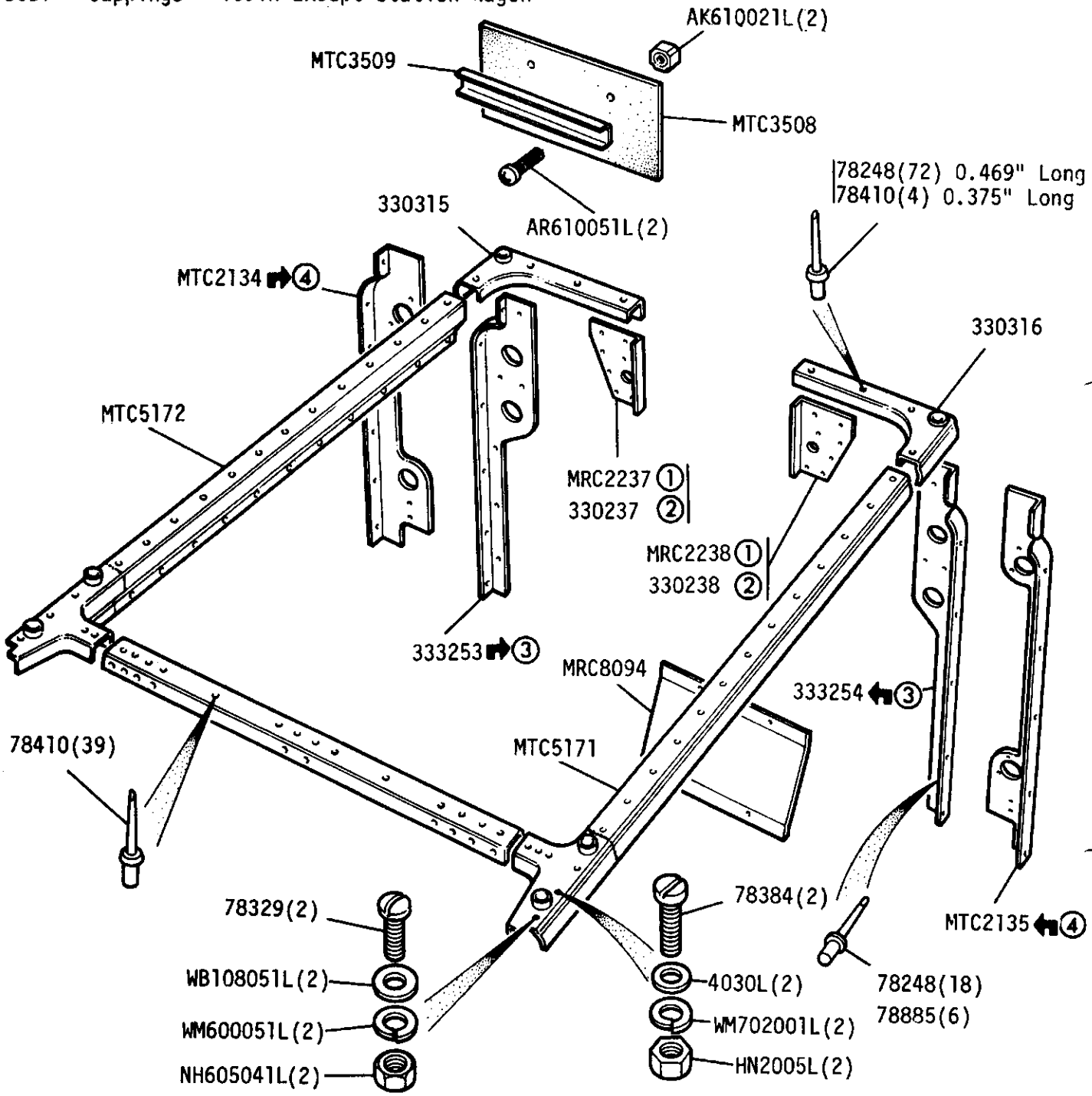

① Except hard top with rear door
② Hard top with rear door
③ Original tail lamp arrangement
④ Modified tail lamp arrangement

GROUP L

BODY - Tailboard Fixings and Rear Nameplate - 109in except Station Wagon

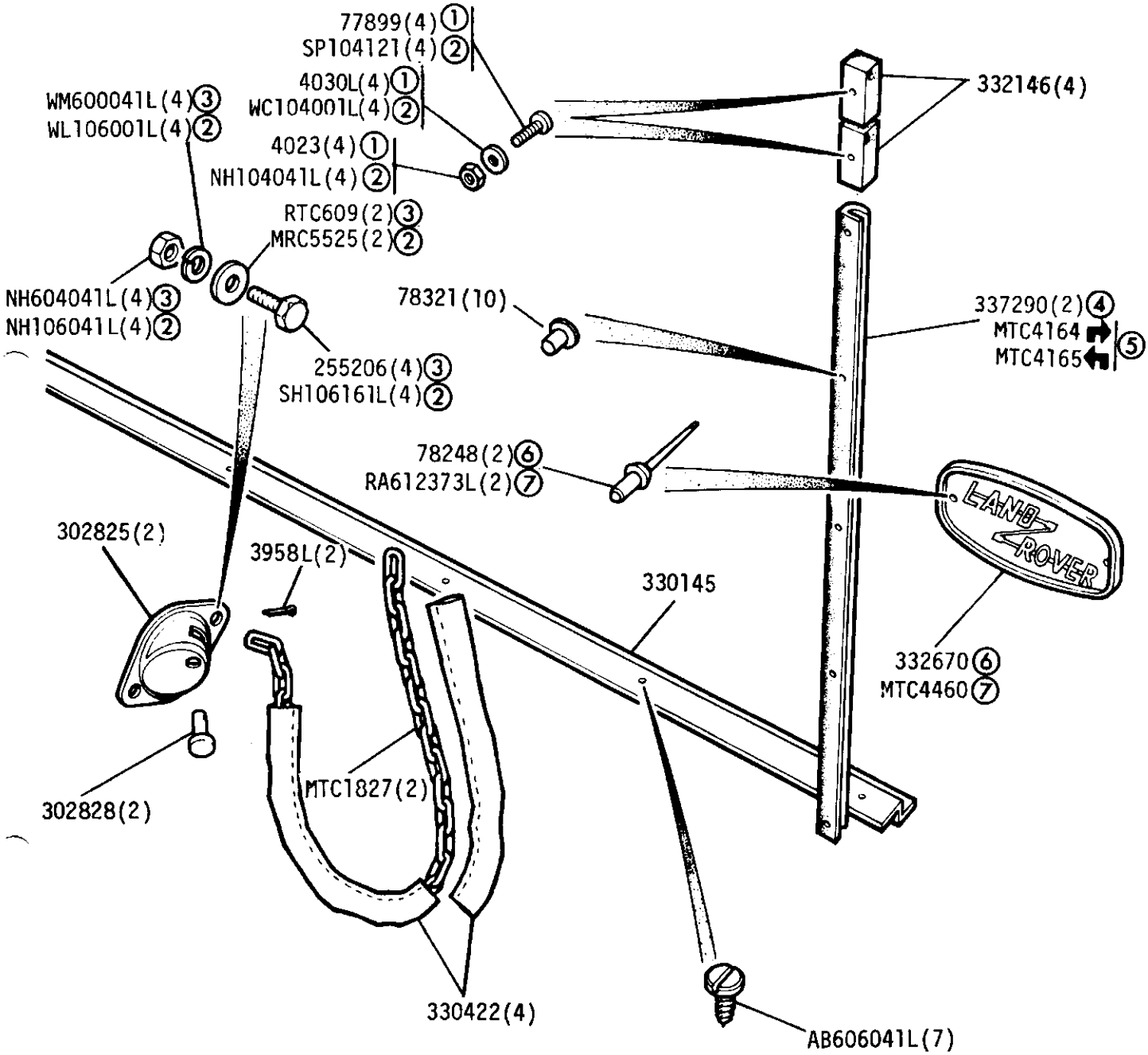

Badge 'V8' rear end panel MRC7537 109 V8

① BA Fixings) Alternatives
② Metric Fixings)
③ UNF Fixings)
④ Upto December 1981
⑤ From January 1982 onwards
⑥ Fitted upto SALLDHAH7AA186336
⑦ Fitted from SALLDHAH7AA186337 onwards

GROUP L
BODY - Rear Body - 109in Station Wagon

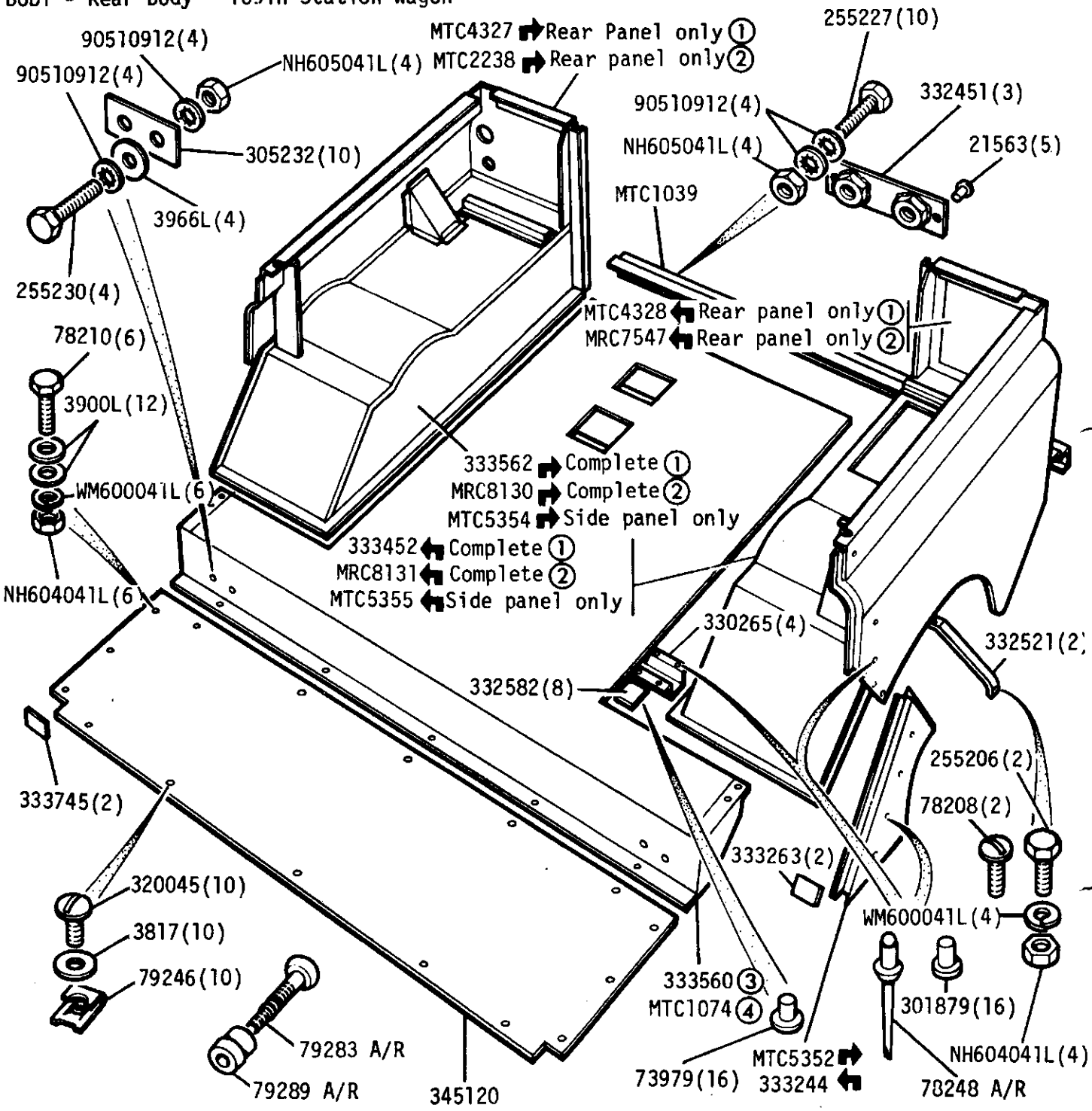

Rear body complete assembly 332983①MTC5359②
Badge, Land Rover V8 body side MRC7425(2) 109 V8

①Original tail lamp arrangement
②Modified tail lamp arrangement
③Upto January 1981
④From February 1981 onwards

GROUP L

BODY - Cover Panels - Rear Body - 109in Station Wagon

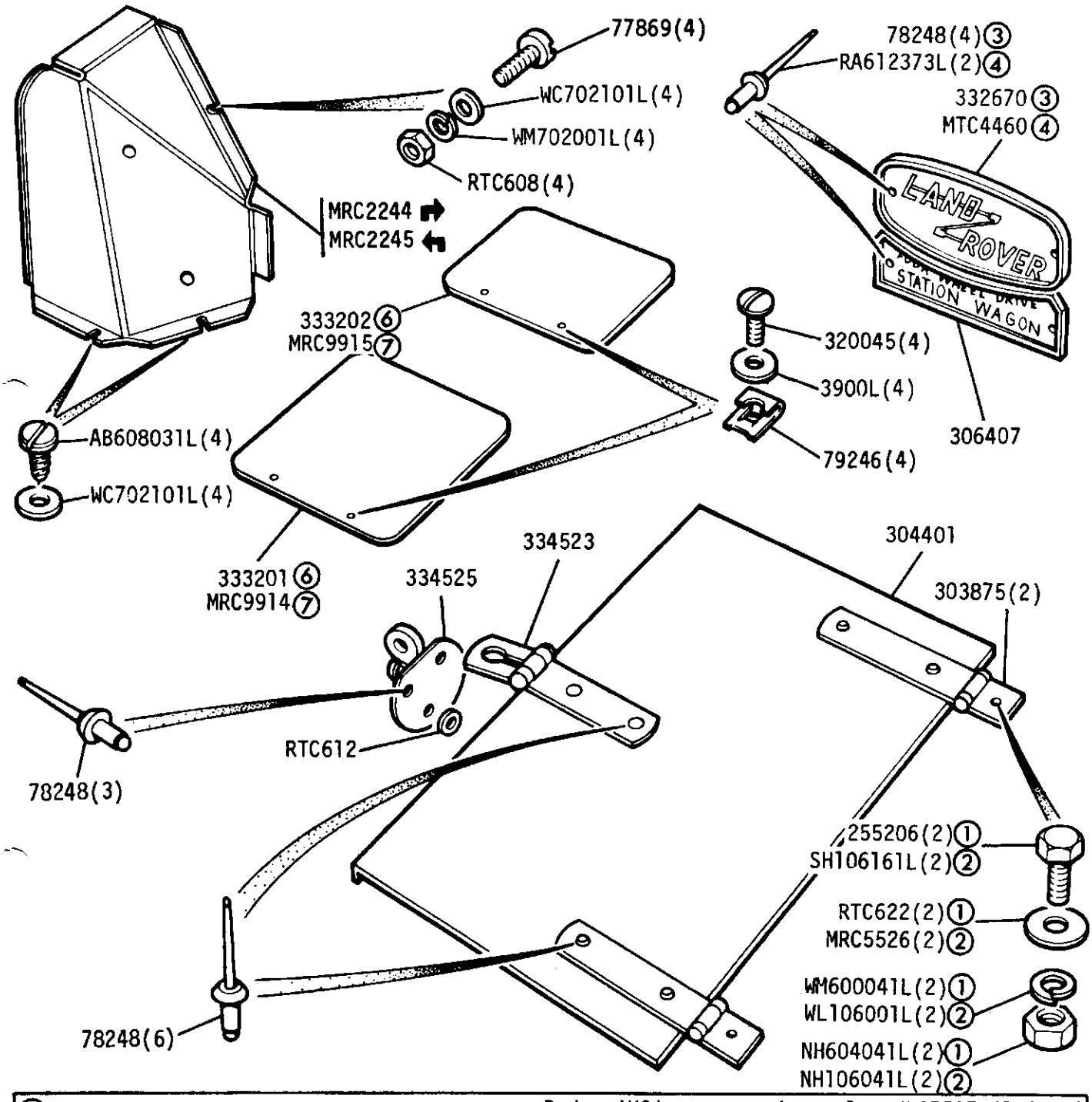

① UNF
② METRIC
③ Fitted upto SALLDHAH7AA186336
④ Fitted from SALLDHAH7AA186337 onwards
⑤ Alternatives
⑥ Up To December 1982
⑦ From January 1983

Badge 'V8', rear end panel - MRC7537 (109 V8)
Clip, harness retention - PRC3537
Plastic flange finisher, harness protection - 570753
Jack retaining bracket - 367030
Rivet - RU612183(2)
Retention ring - 371144 ⑤
Retention ring - NRC9101 ⑤

GROUP L

BODY - Toe Panel and Harness Brackets - 109 in Station Wagon

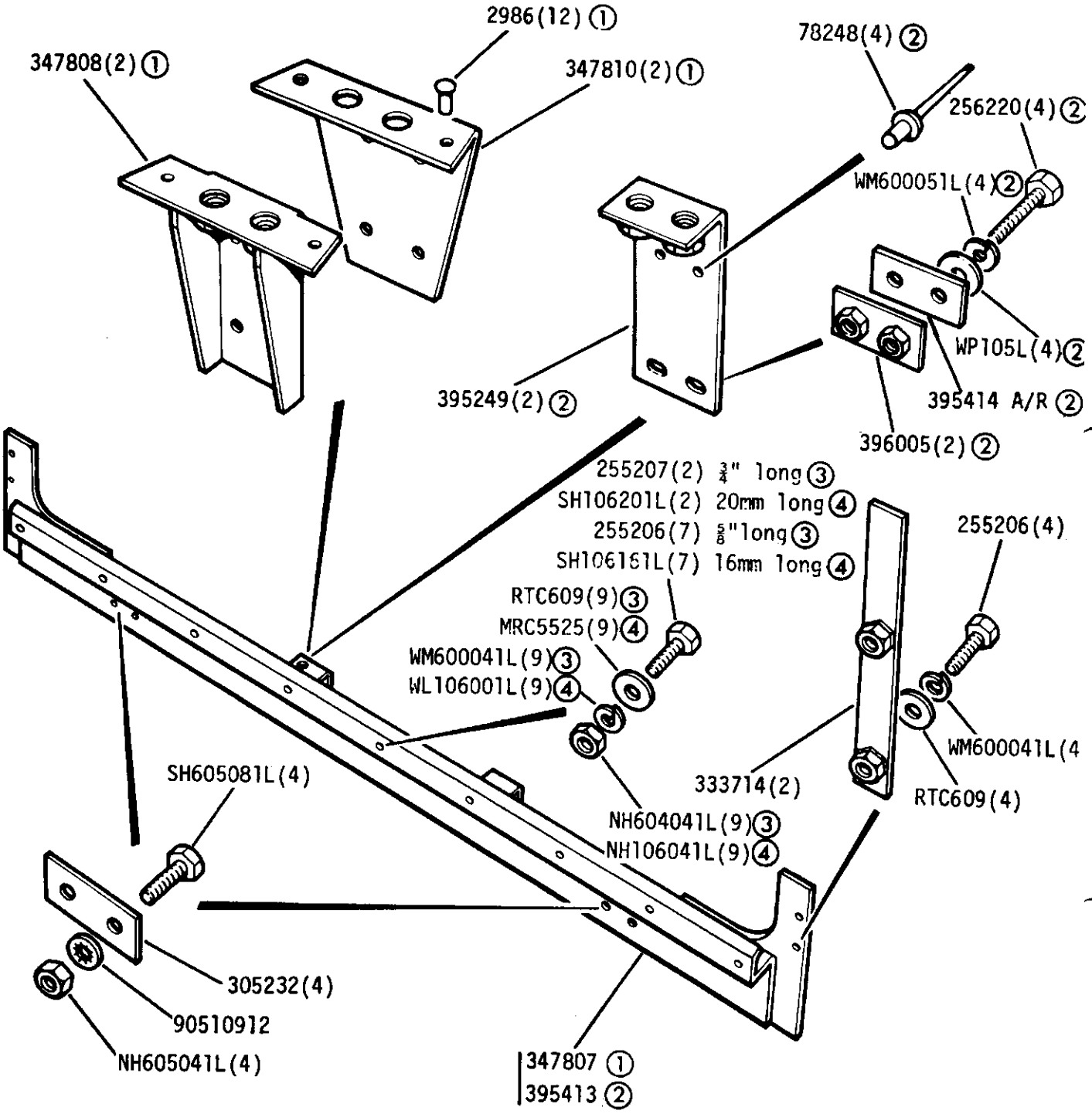

→ ① Up to vehicle numbers 93100689, 93600336 and 94600372

② → From vehicle numbers 93100690, 93600337 and 94600373 onwards

③ UNF

④ METRIC

GROUP L
BODY - Cappings - 109in Station Wagon

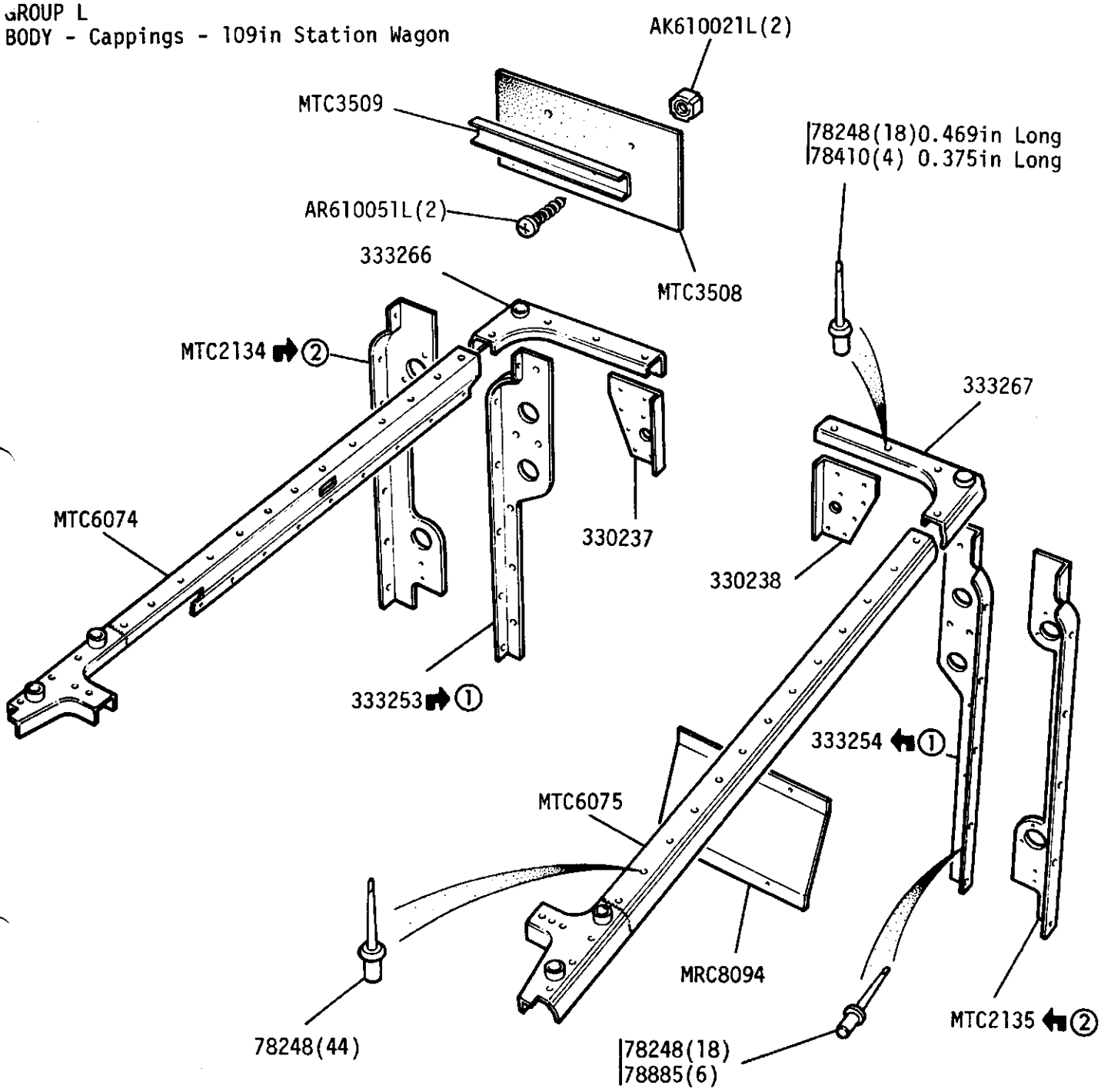

① Original tail lamp arrangement
② Modified tail lamp arrangement

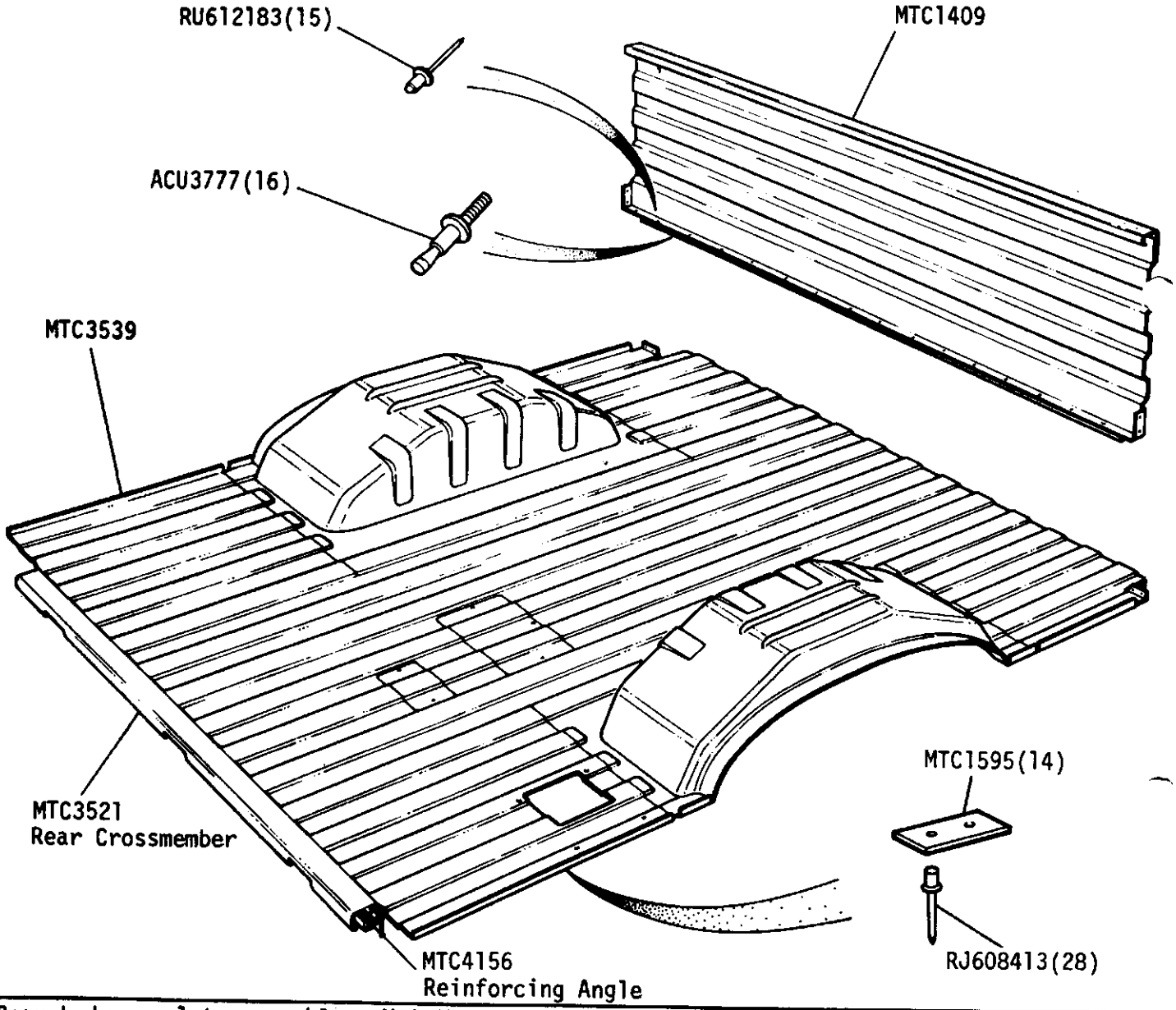

Rear body complete assembly - MTC3904

Avdelok Bolt, rear crossmember - AAU6919(12)
Collar, rear crossmember - AAU6774(12)
Tee Bolt, rear crossmember - MTC3558(4)
Plain Washer, rear crossmember - WA108051L(4)
Nut, rear crossmember - NH108041L(4)
Grommet, rear crossmember - 3H822L(2)

GROUP L

CHASSIS - Rear Mounting Brackets - X - Member

H.C.P.U.

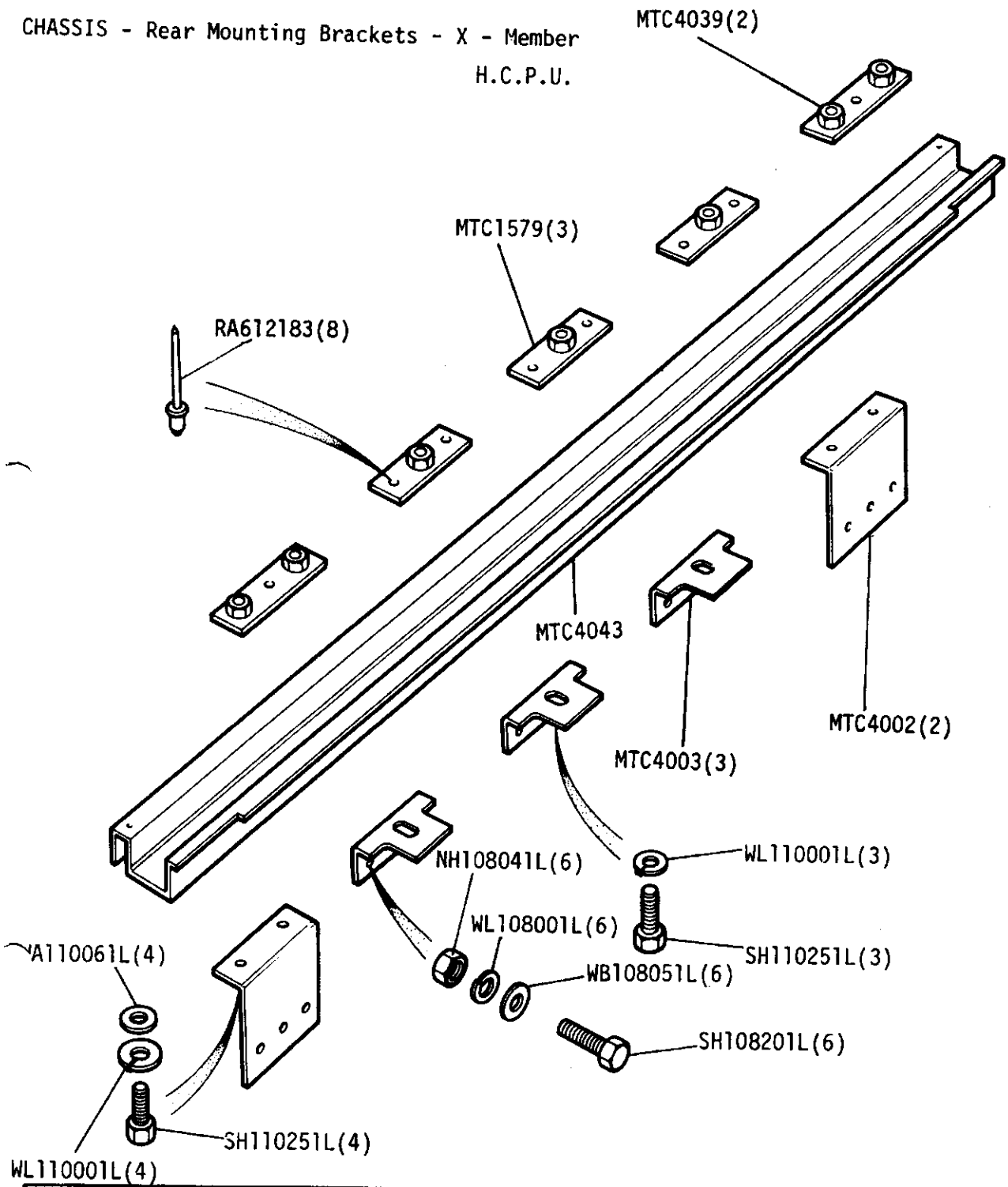

GROUP L
CHASSIS - Front and Rear Body Anchor and Rear Bumper Stops H.C.P.U.

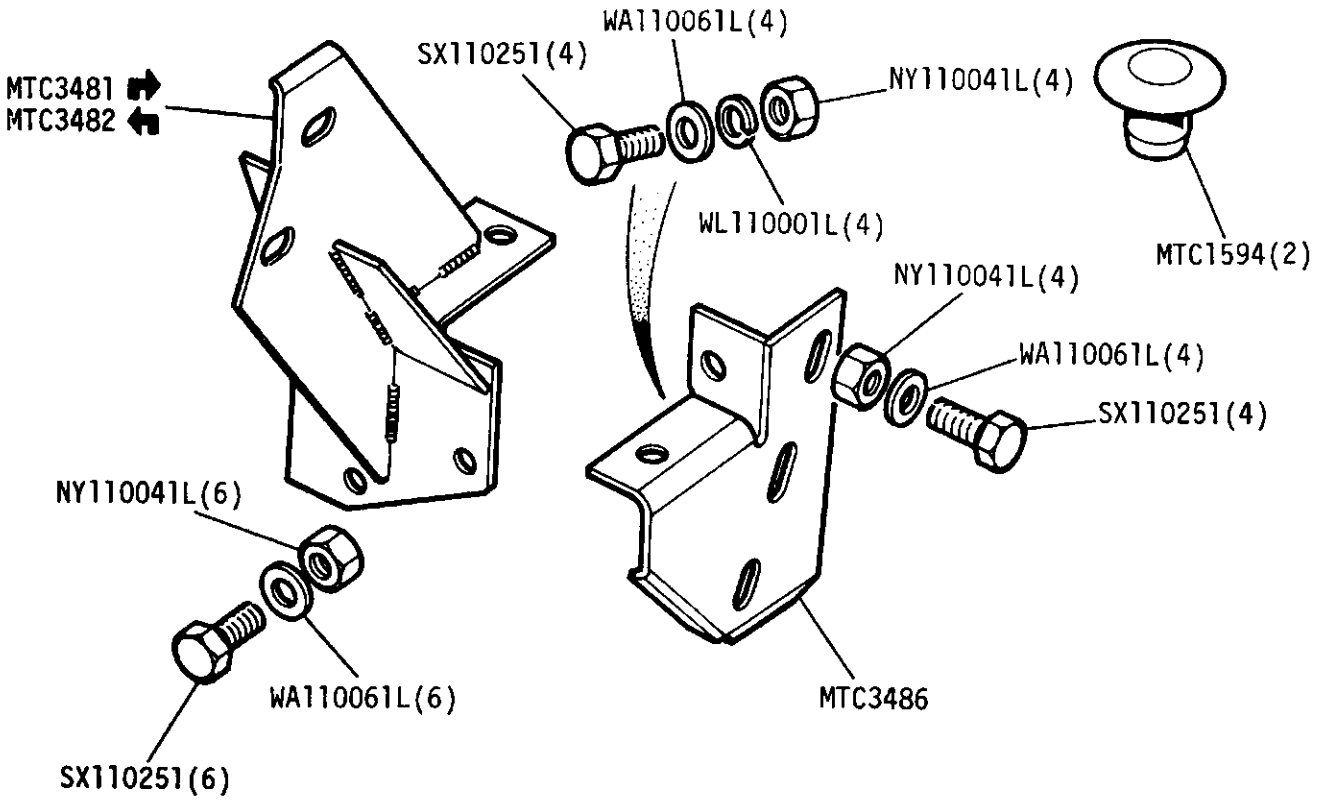

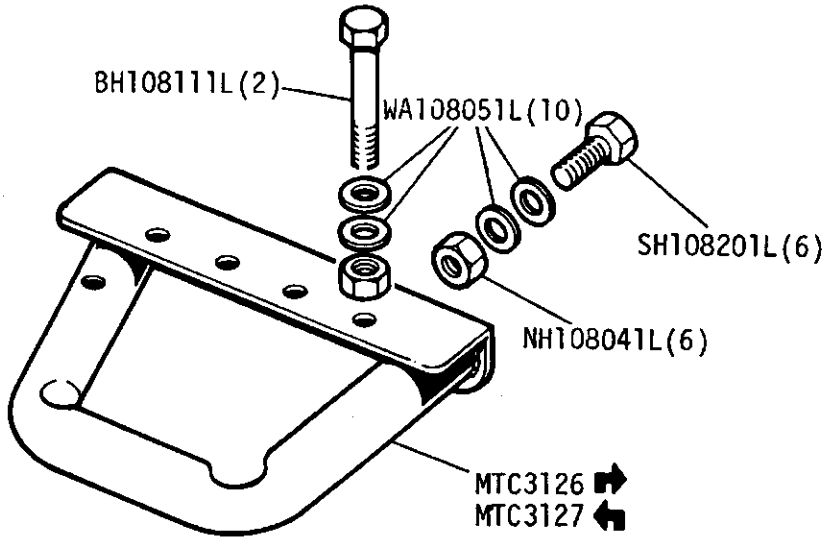

GROUP L
BODY - Bodysides - H.C.P.U.

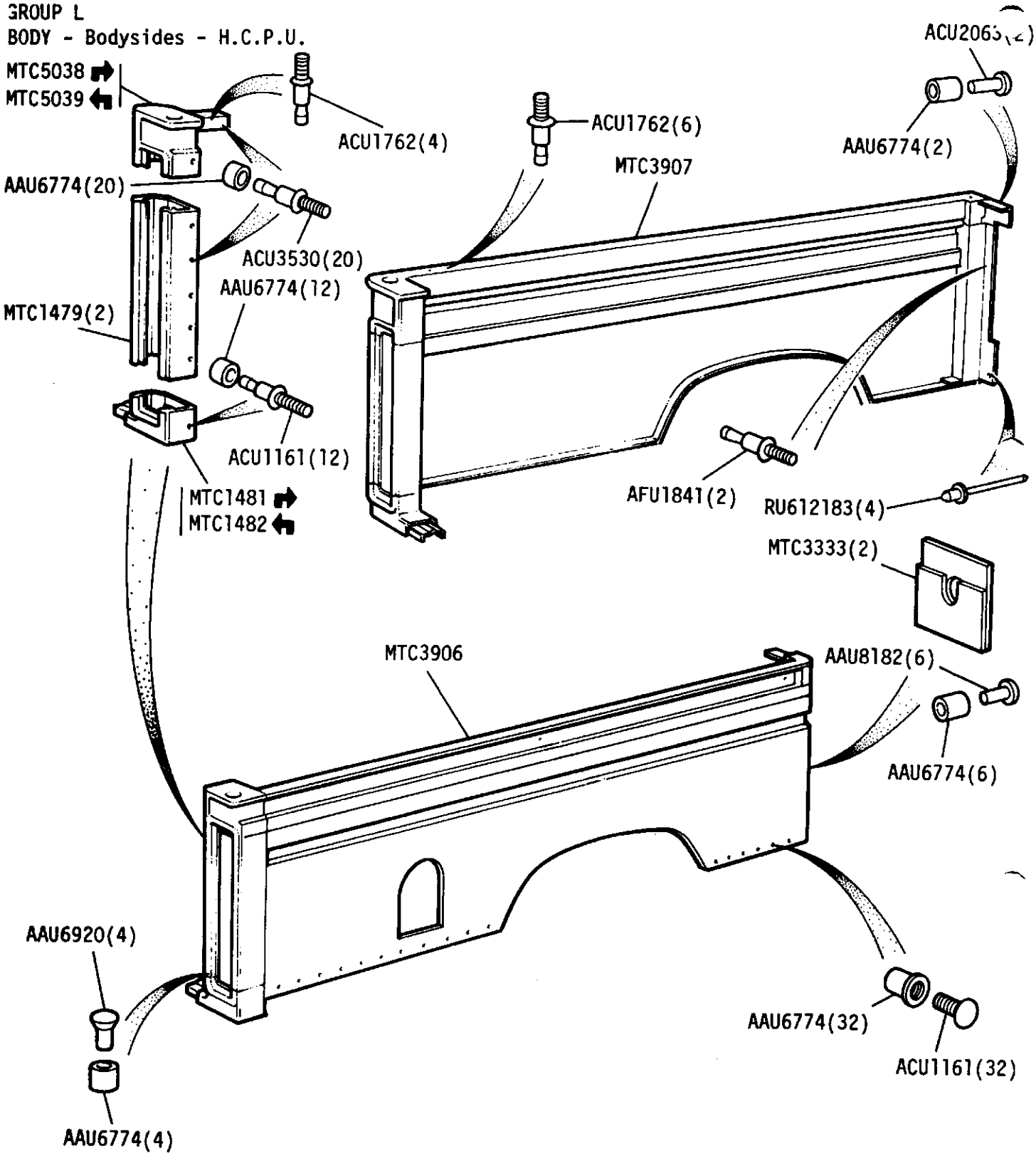

GROUP L
BODY - Bodysides - H.C.P.U.

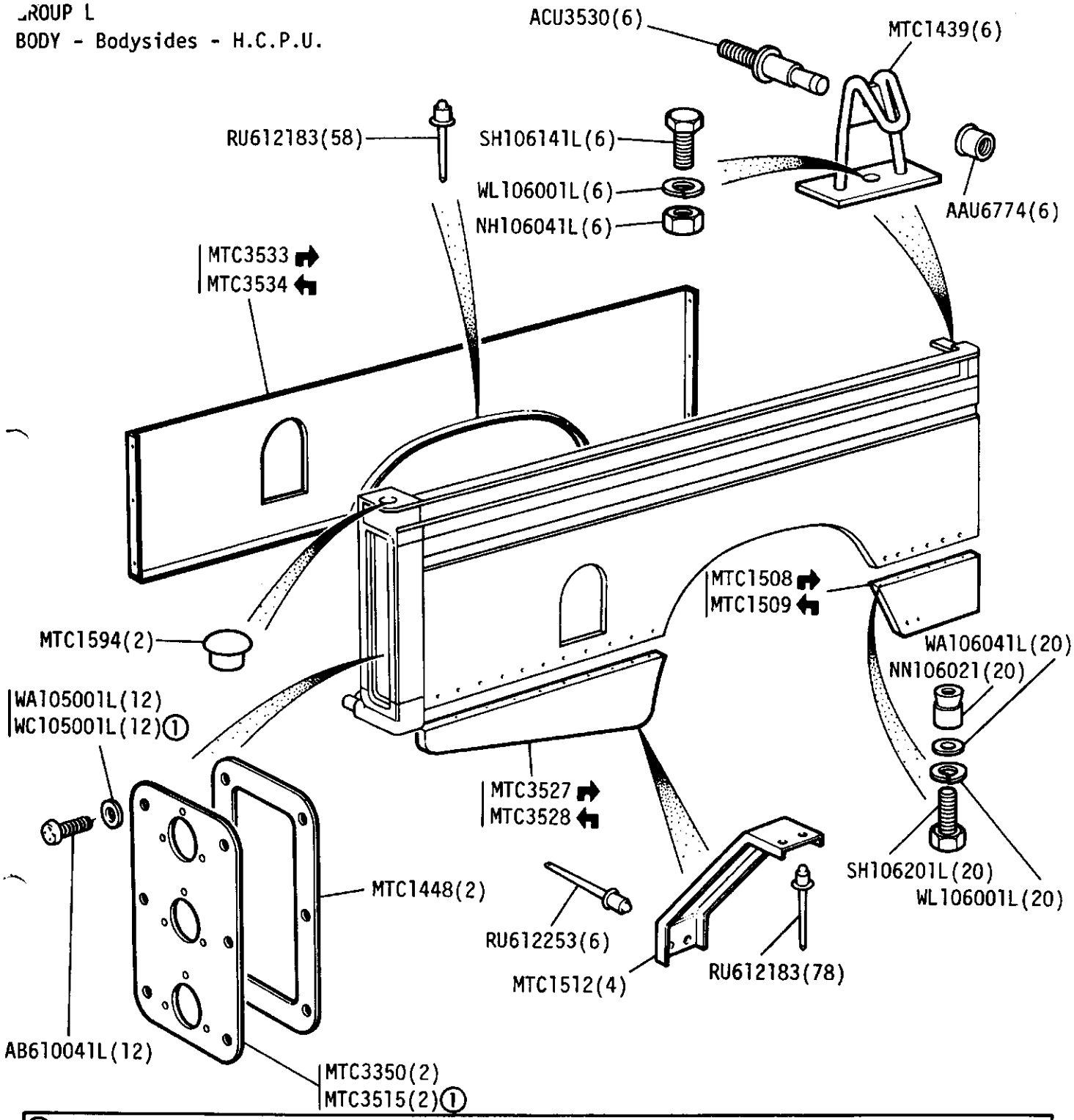

1 Required when Fog or Reverse Lamps are fitted

GROUP L
BODY - Spare Wheel Mounting H.C.P.U.

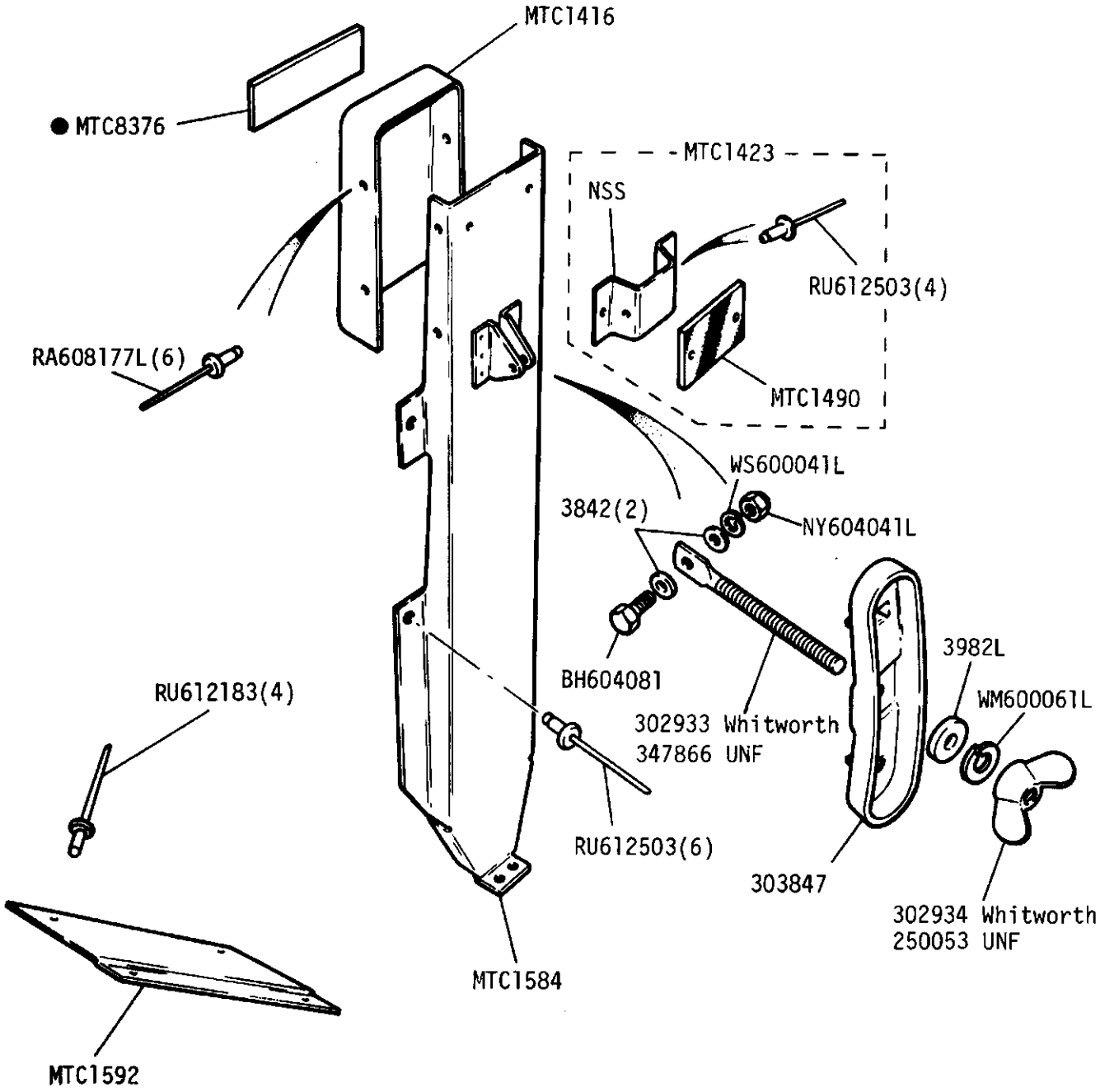

●Vehicles fitted with Hood assembly with side windows.

GROUP L
BODY - Fuel Filler Cowl H.C.P.U.

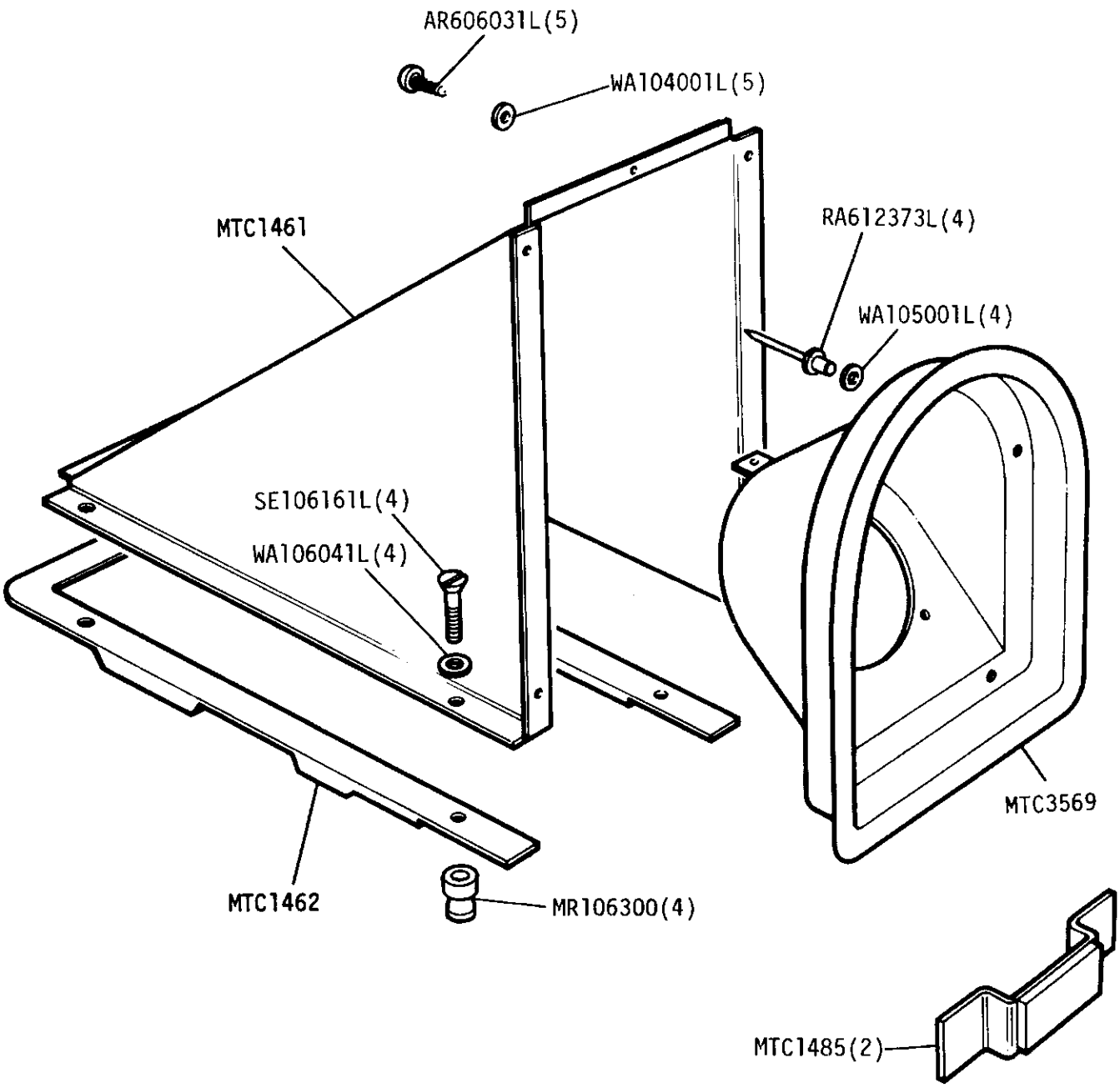

Label, "Diesel Fuel" - MTC4320

GROUP L
BODY - Tailboard Assembly

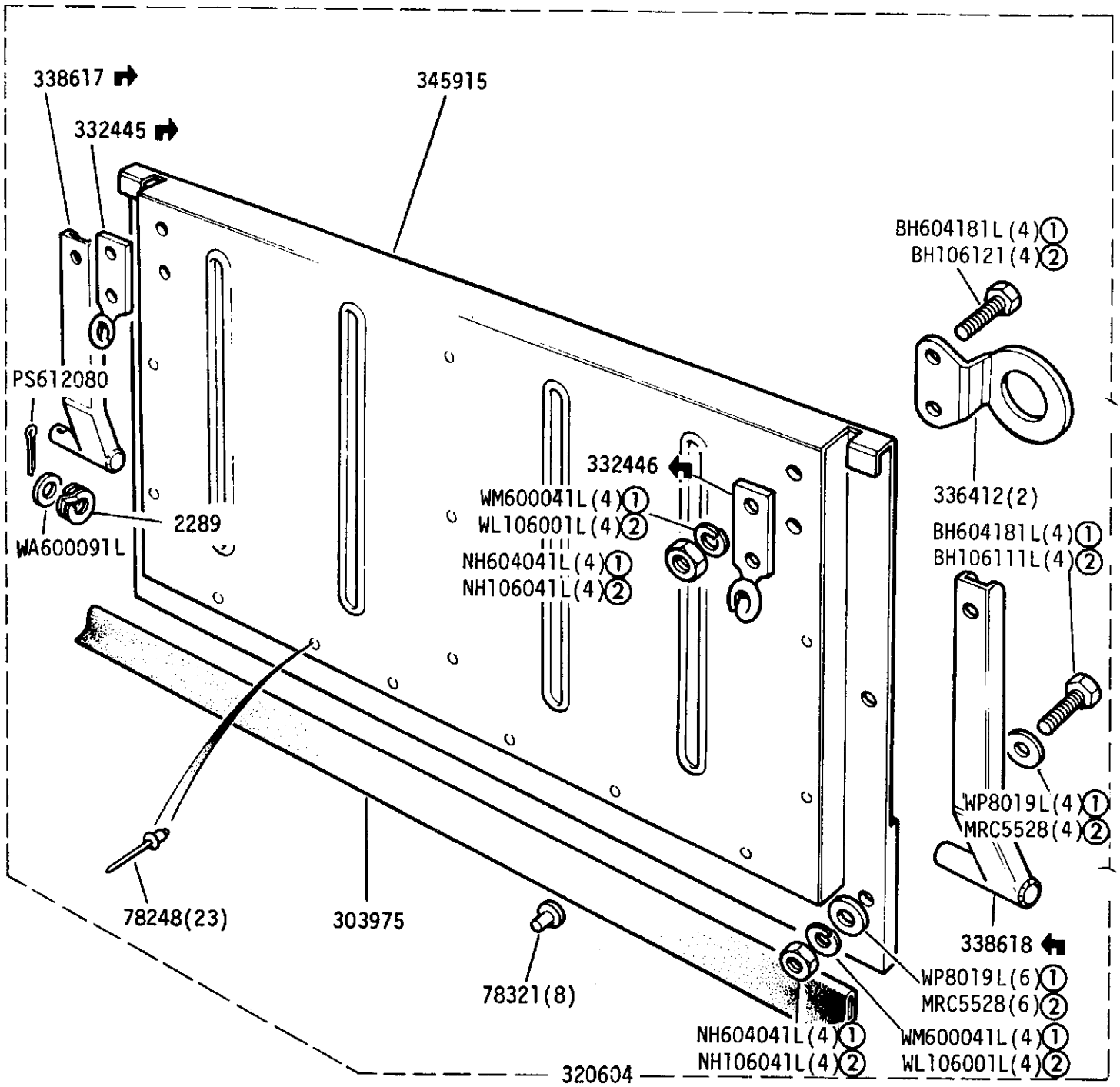

①UNF
②METRIC

ROUP L
BODY - Tailgate H.C.P.U.

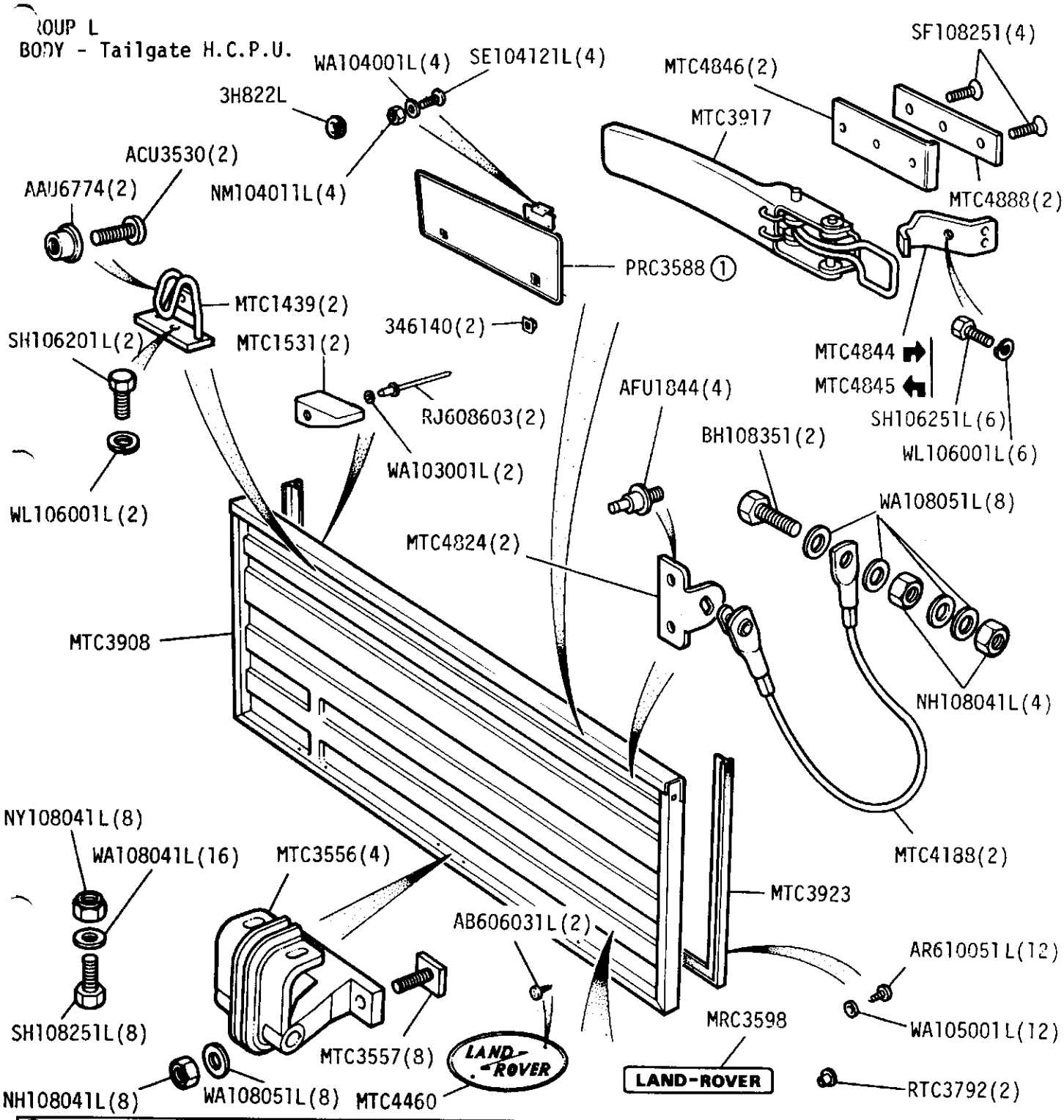

① Optional if required.

GROUP L

BODY - Ladder Rack

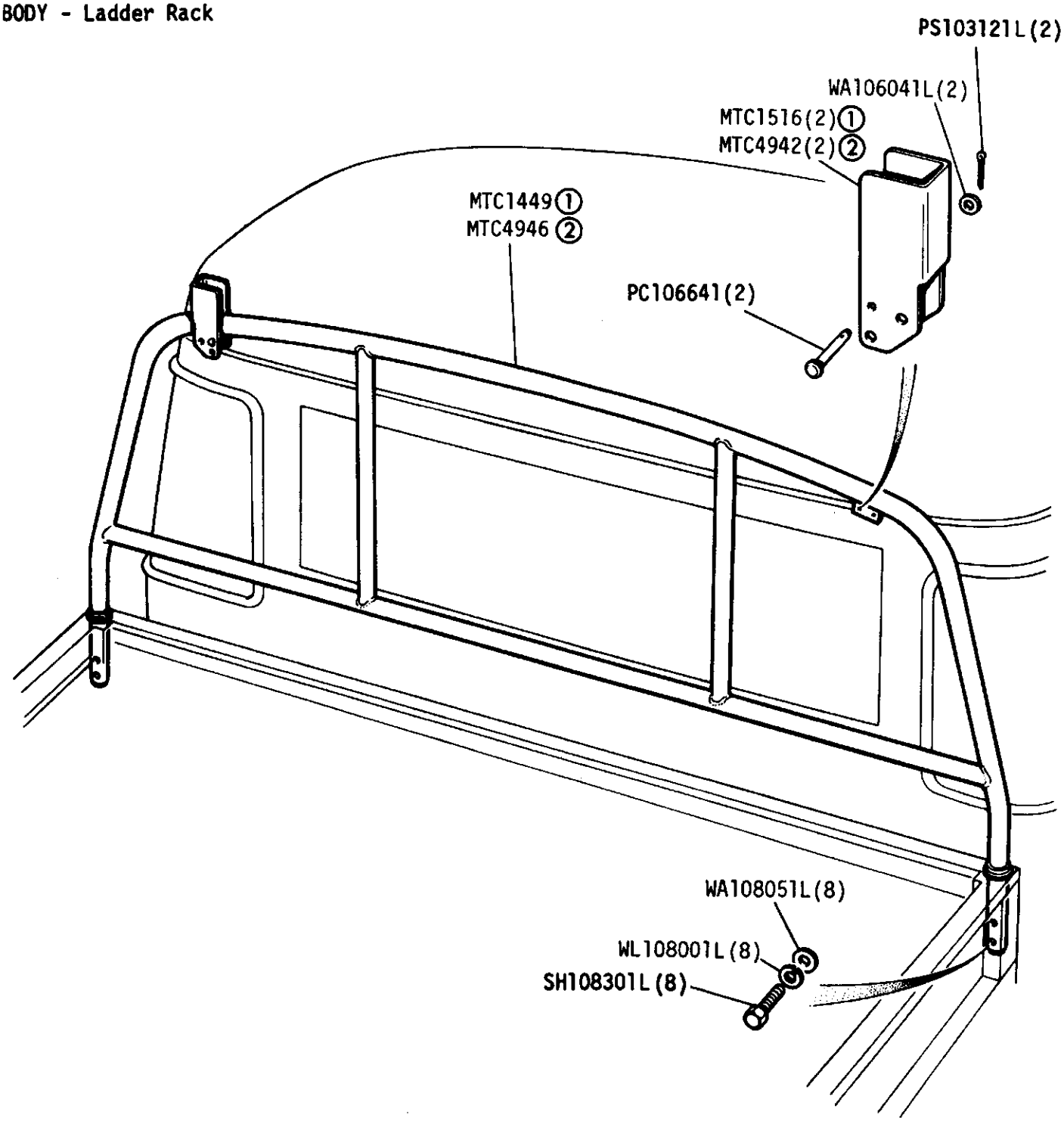

①Black Finish
②Galvanised Finish

ROUP N

BODY - Rear Wheelguards and Mudflaps - H.C.P.U.

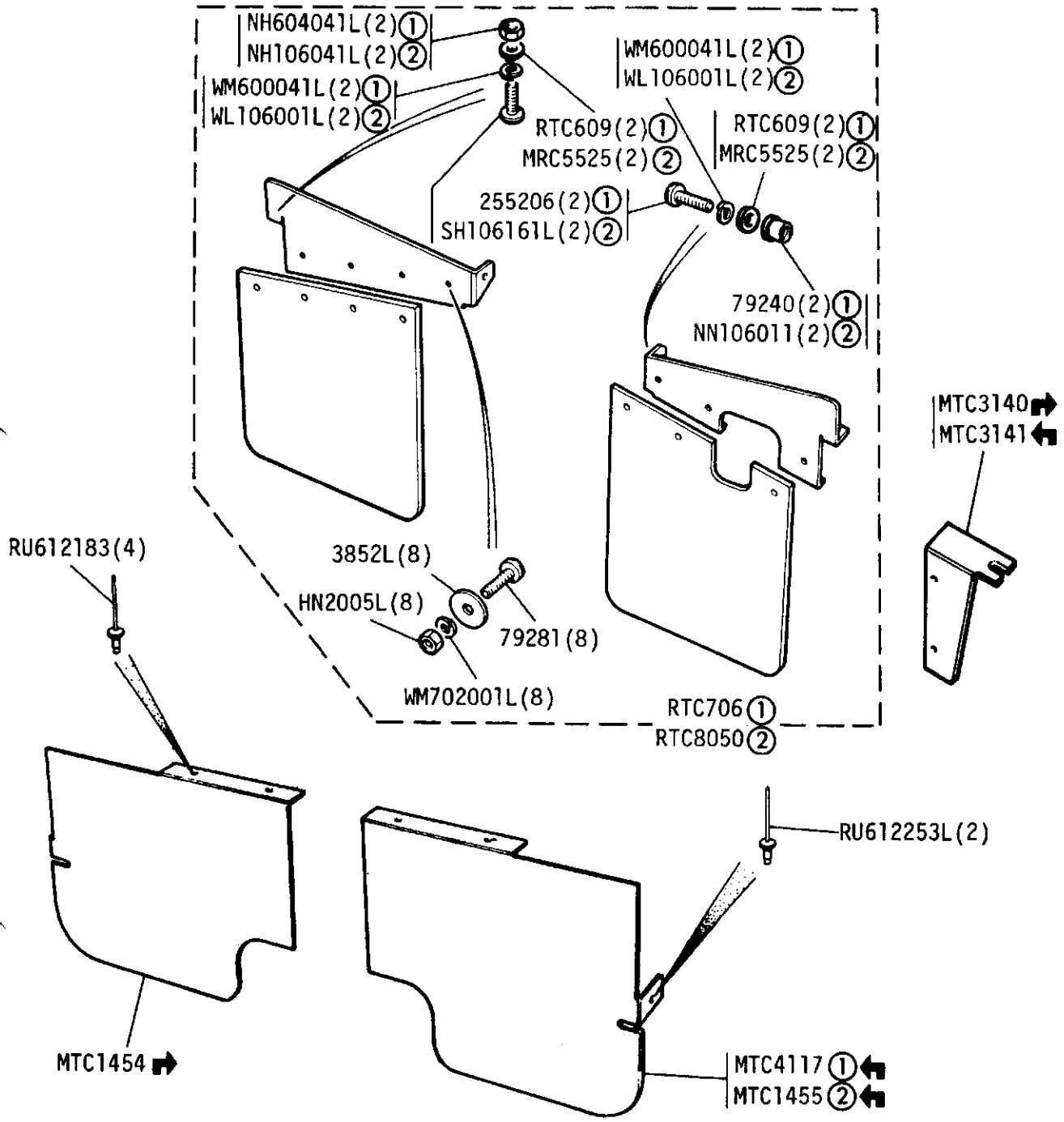

① 4 Cylinder
② 109V8

GROUP L

BODY - Side Panel and Fixings - Station Wagon

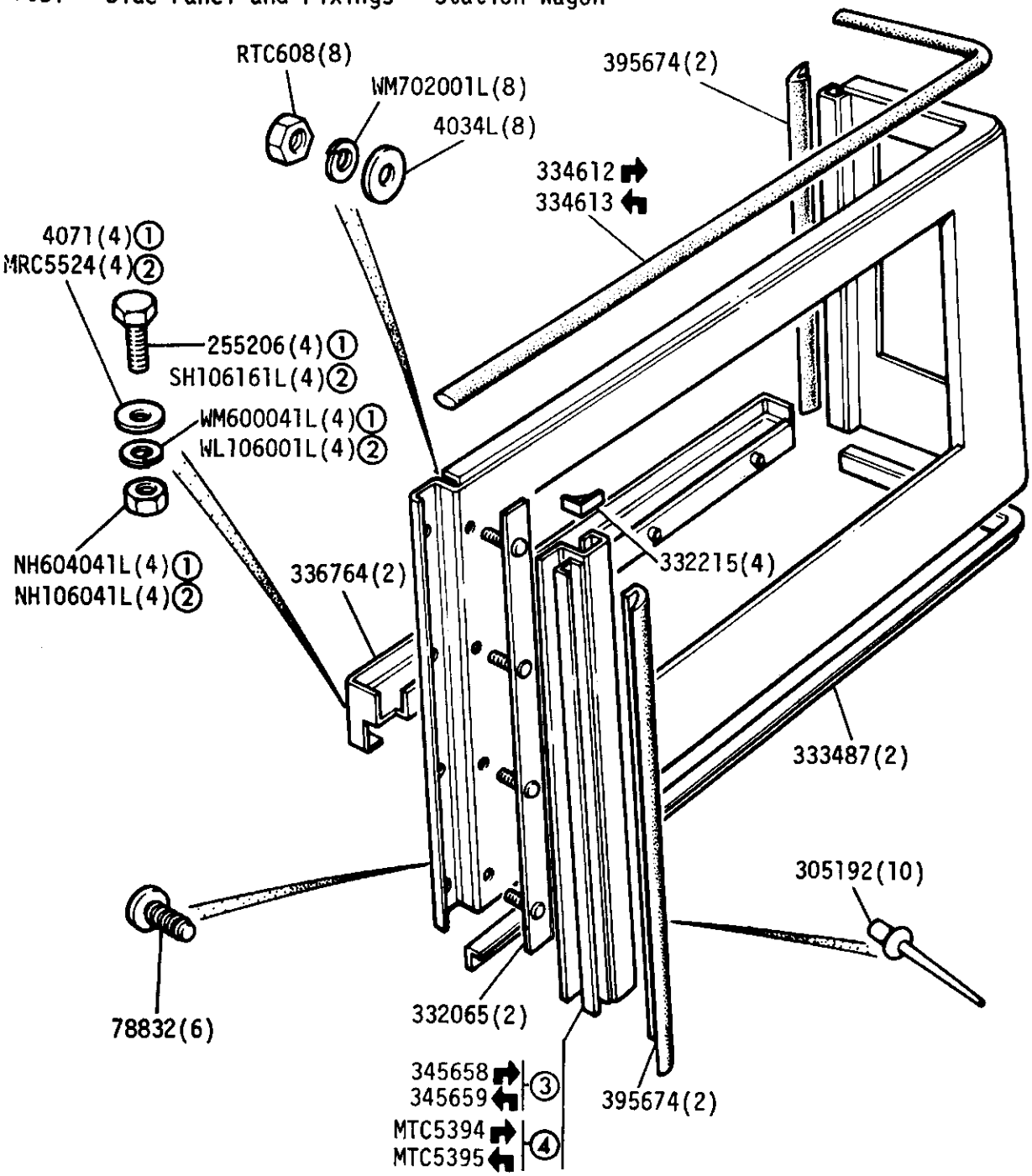

Side panel assembly	MRC4612 ➡	Except 109 V8
Side panel assembly	MRC4613 ⬅	
Side panel assembly	MTC5422 ➡	109 V8
Side panel assembly	MTC5423 ⬅	

① UNF

② METRIC

③ Except One Piece Door Seals.

④ Required for One Piece Door Seals.

GROUP L
BODY - Side Panel Mounting - Station Wagon

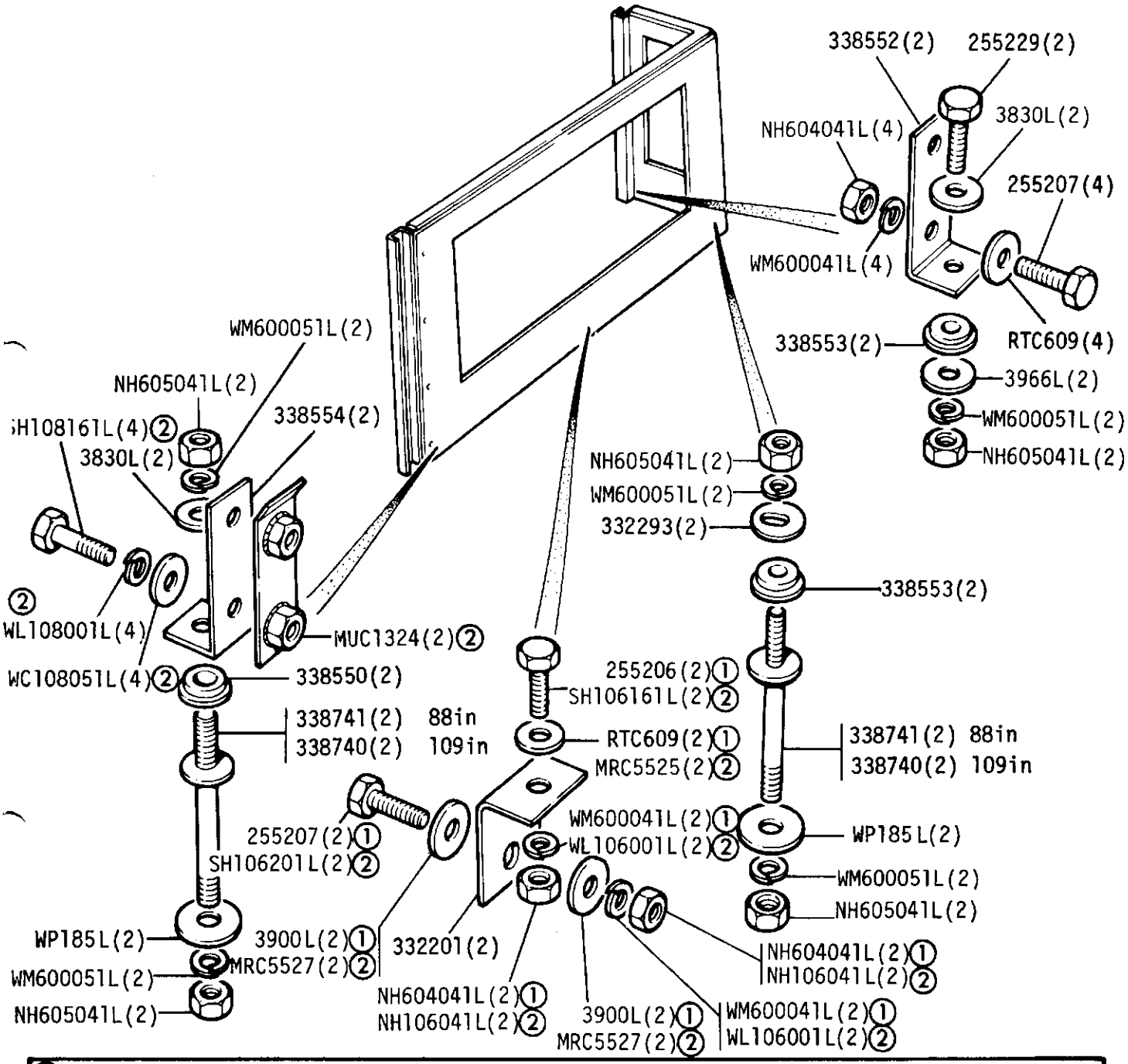

①UNF
②METRIC

GROUP L
BODY - Rear Side Windows - Station Wagon

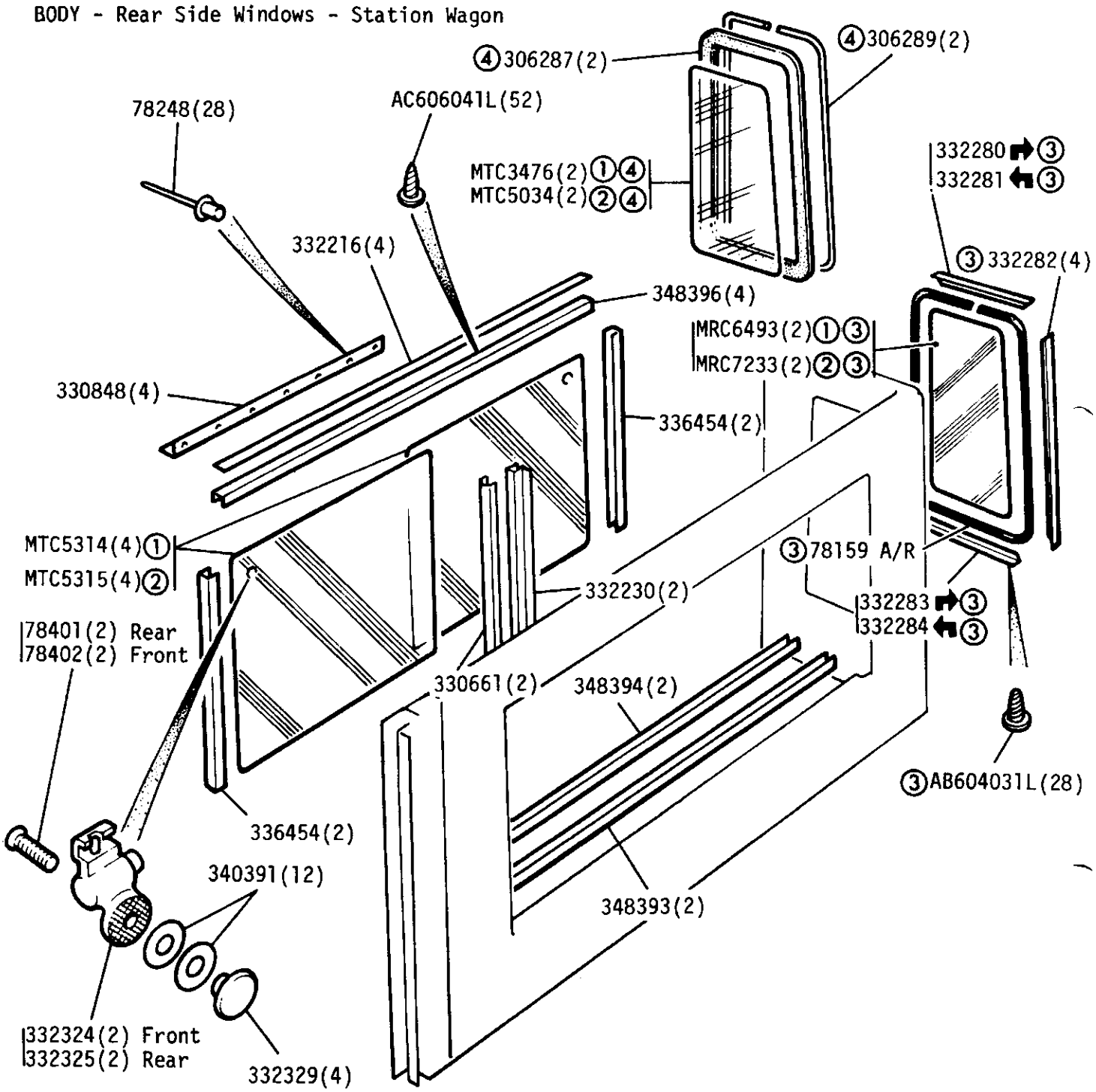

① Except 109 V8
② 109 V8
③ Early Condition
④ Later Condition

GROUP L

BODY - Roof - 88in Station Wagon

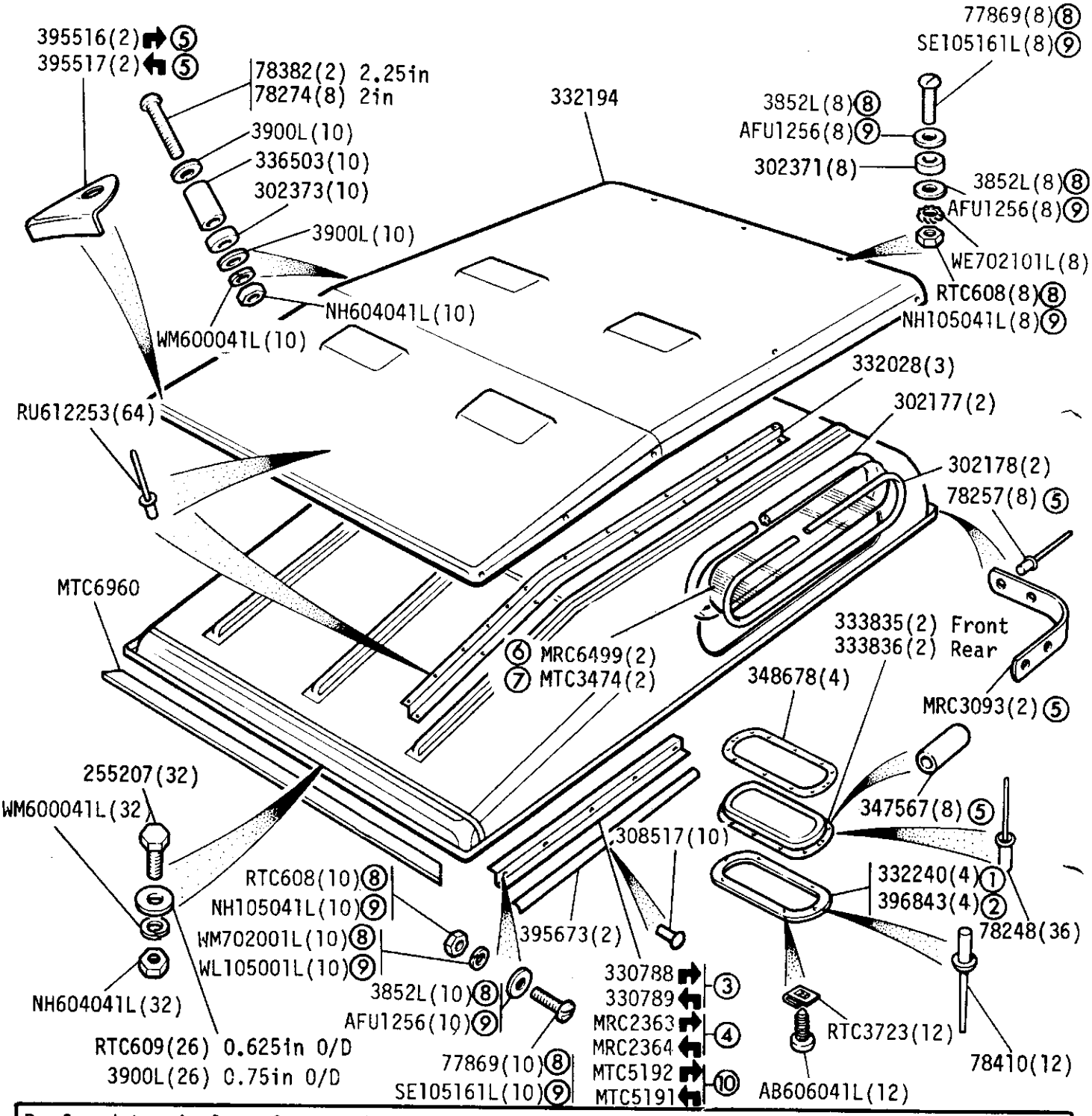

Roof and tropical roof assembly MRC7376

① White
② Limestone
③ Up to March 1973
④ From April 1973 onwards
⑤ Germany Only
⑥ Clear
⑦ Sundym
⑧ UNF
⑨ METRIC
⑩ Required for One piece door seals

GROUP L

BODY - Roof - 109in Station Wagon

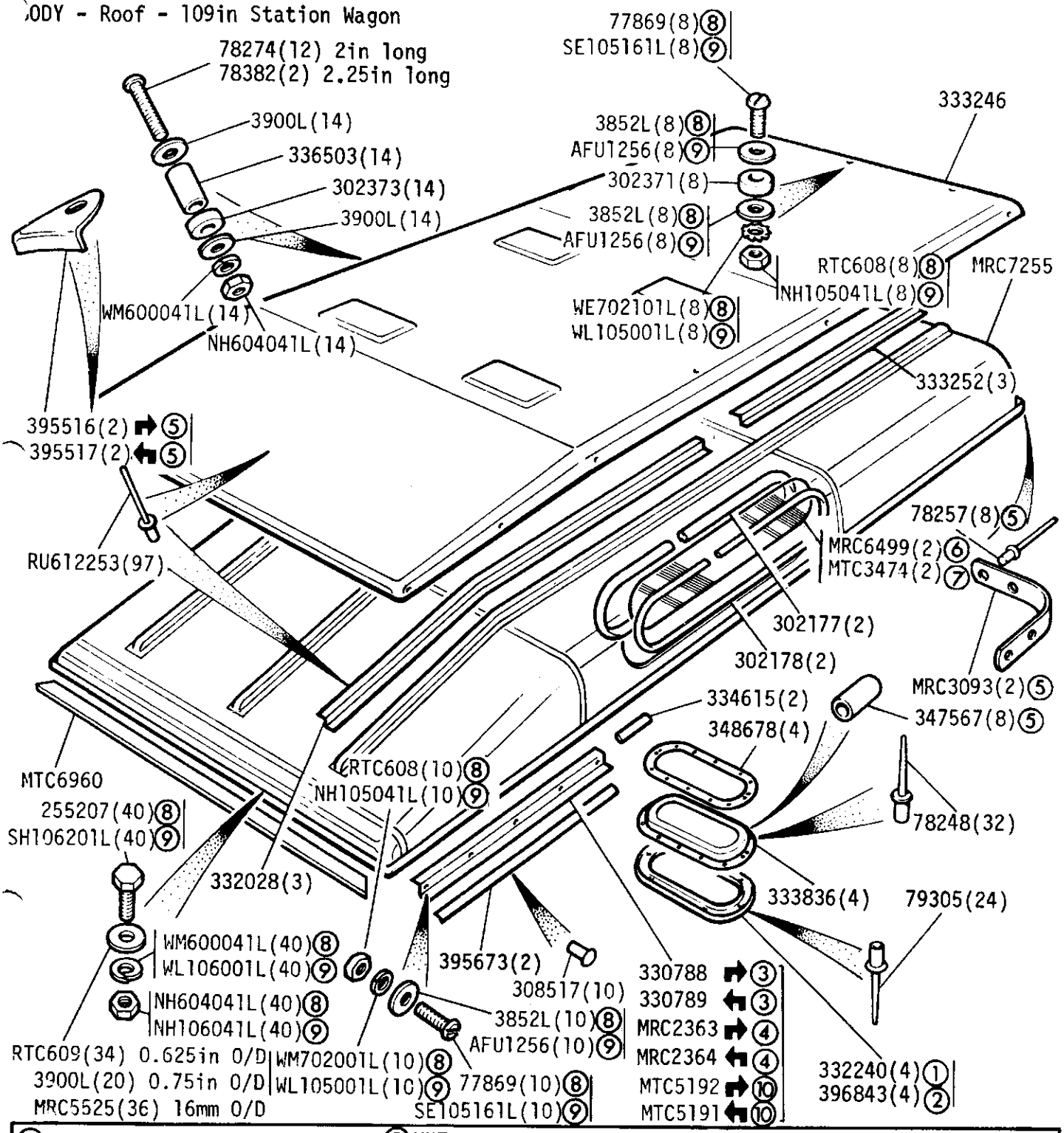

① White
② Limestone
③ Up to March 1973
④ From April 1973 onwards
⑤ Germany only
⑥ Clear
⑦ Sundym
⑧ UNF
⑨ METRIC
⑩ Required for one piece door seals.

GROUP L

BODY - Rear Door - Station Wagon

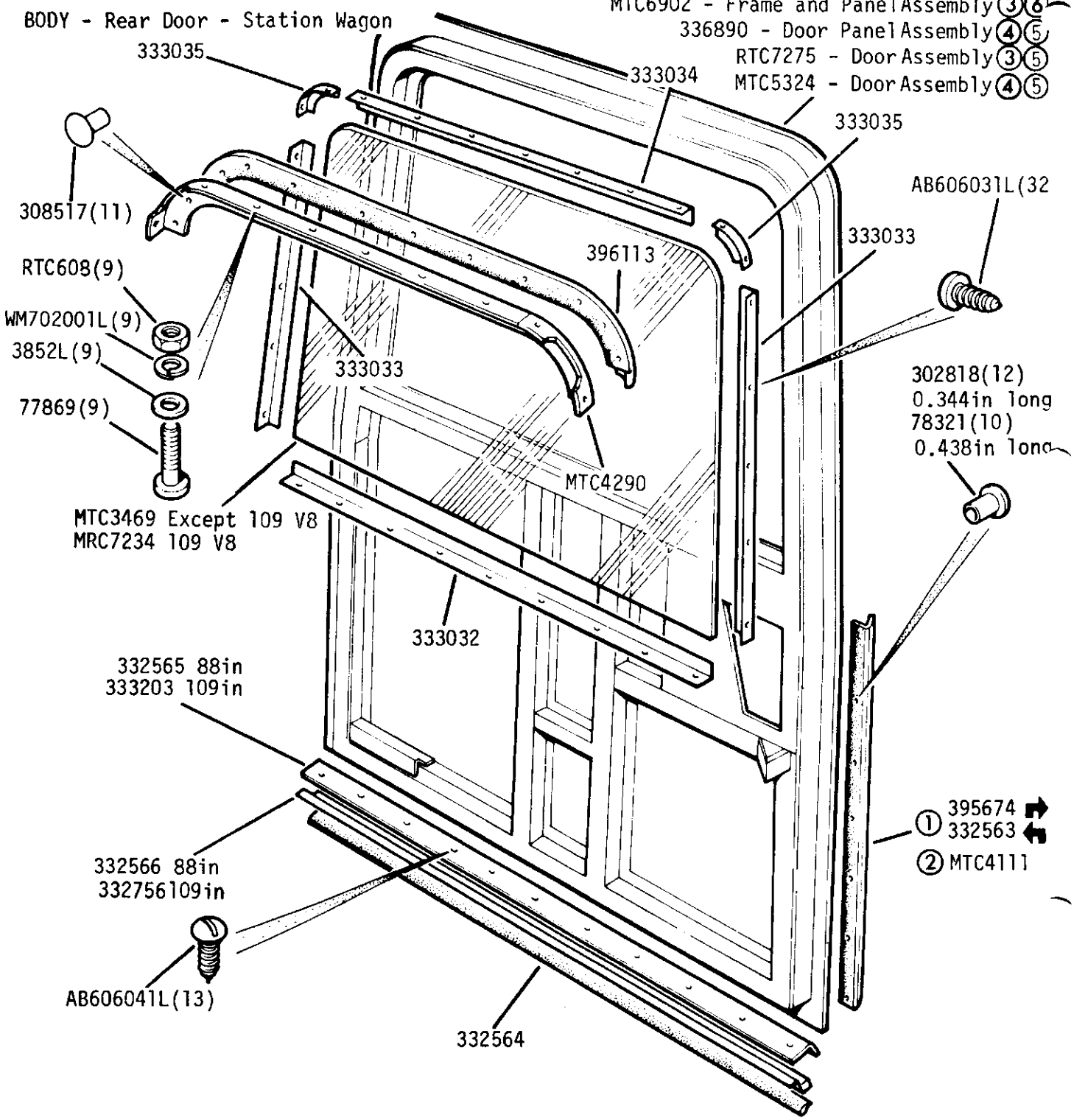

① Two Piece Seals

See frame 2I 02 for Spare Wheel Fixings

② One Piece Seal

③ Except 109V8

④ All Vehicles including 109V8

⑤ Without provision for Spare Wheel Carrier

⑥ With provision for Spare Wheel Carrier

Clinched Door Assembly, with provision for Spare Wheel Carrier:- MTC9908④

Clinched Door Assembly, without provision for Spare Wheel Carrier:- MTC9917④

GROUP L
BODY - Locks - Rear Door - Station Wagon

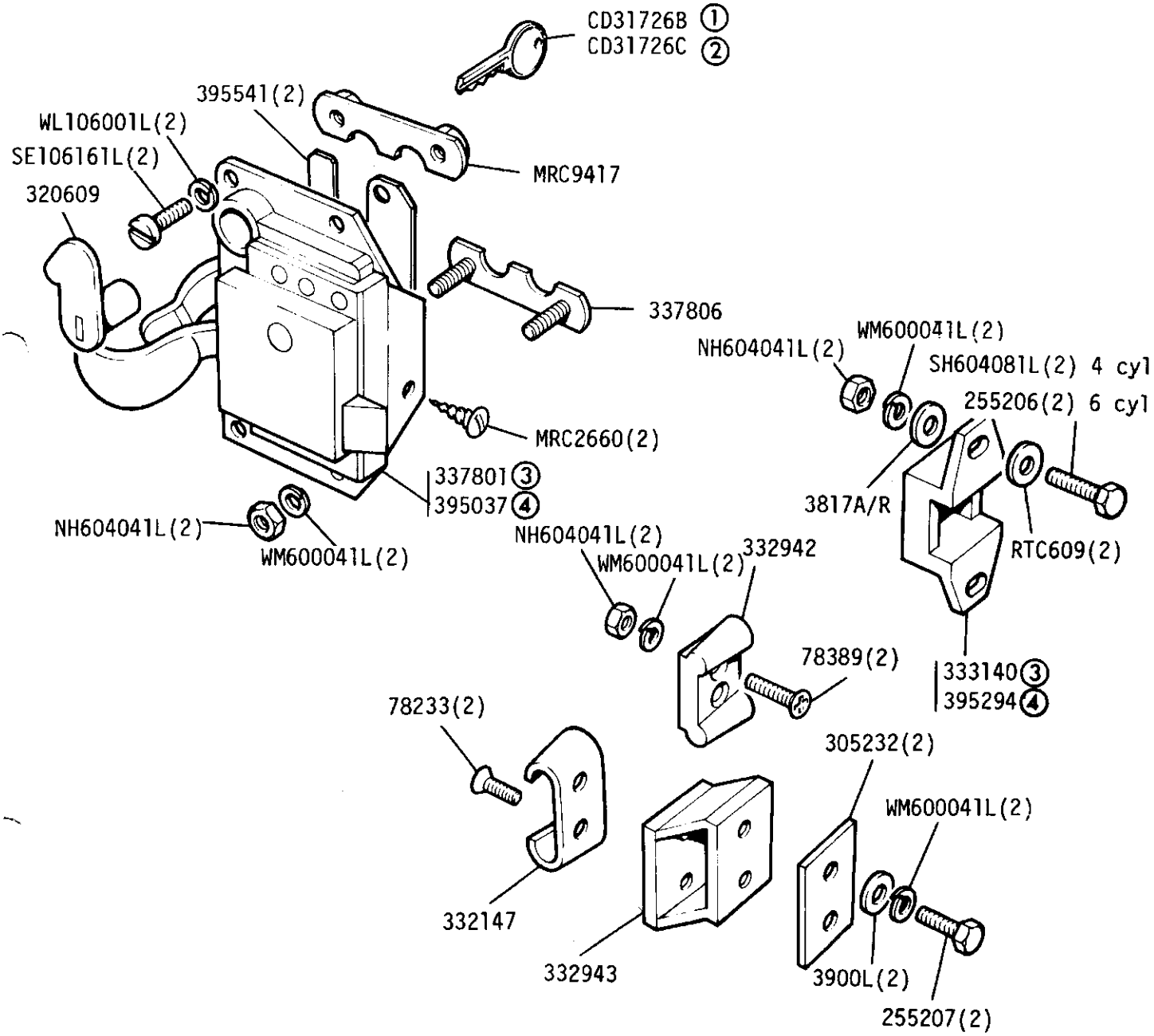

① Blank
② Cut
③ Except 109V8
④ 109V8

GROUP L
BODY - Rear Door Hinges, Check Straps and Spare Wheel Carrier - Station Wagon

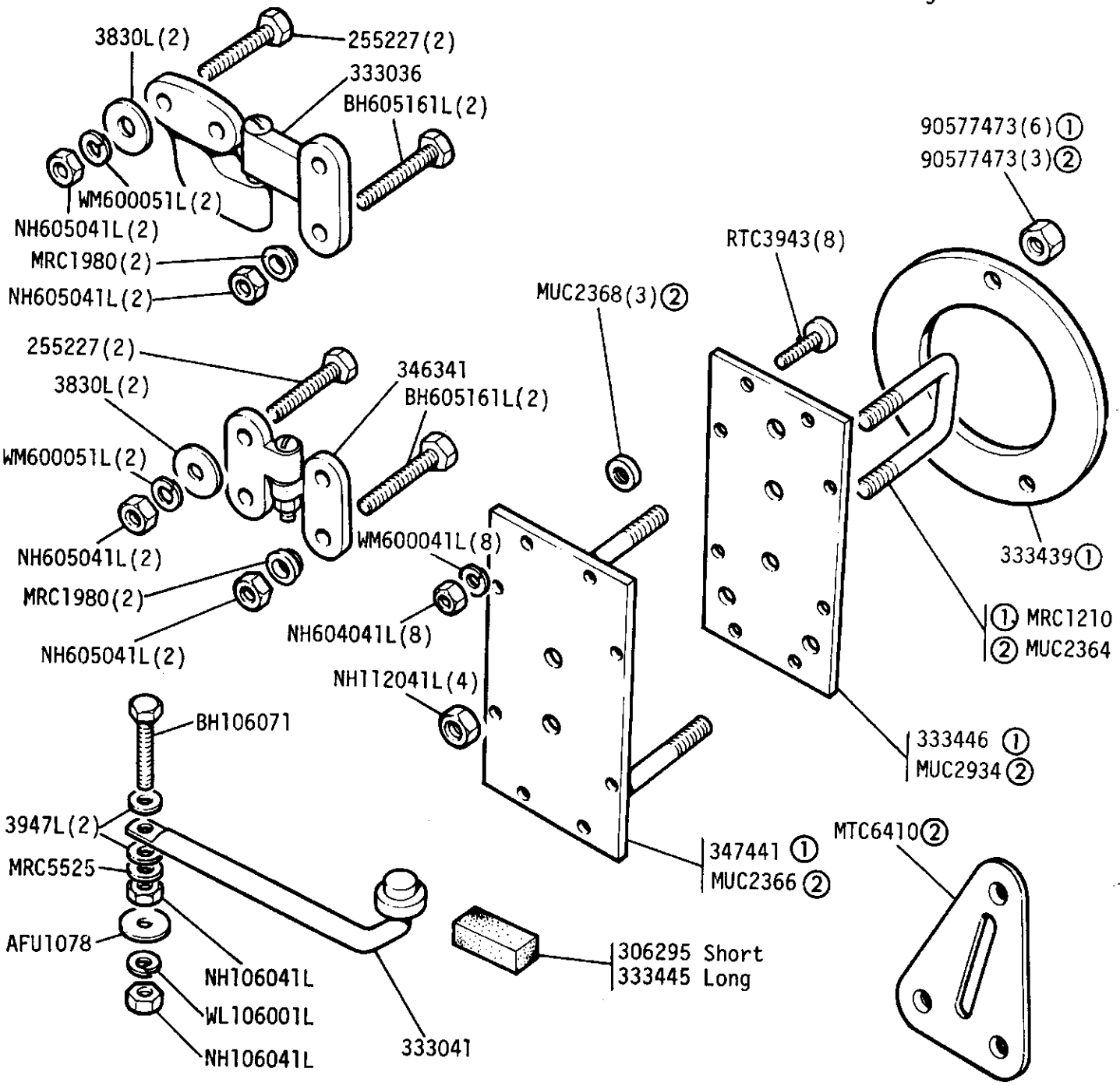

①Upto Chassis No. SALLBCAV2AA210568
②From Chassis No. SALLBCAV2AA210569 Cover, Spare Wheel - MRC7365 (109V8 Station Wagon)
Cover, Spare Wheel - MTC7793 (88in County Station Wagon)
Ring for Eyelet - 301321(5)

GROUP L

JDY - Rear Step - Station Wagon

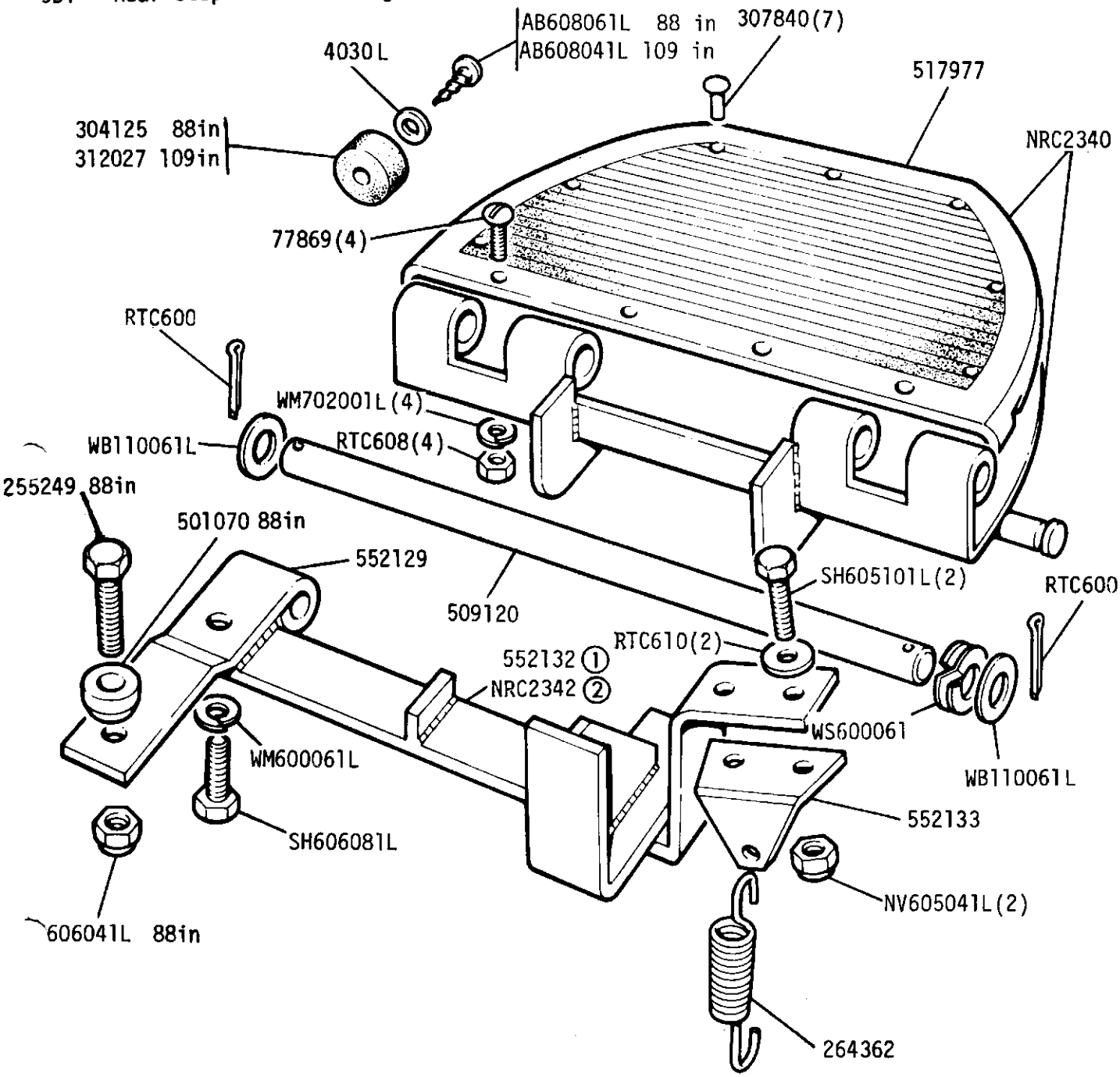

① For use with step 523589

② For use with step NRC2340

GROUP L

BODY - Interior and door mounted mirrors

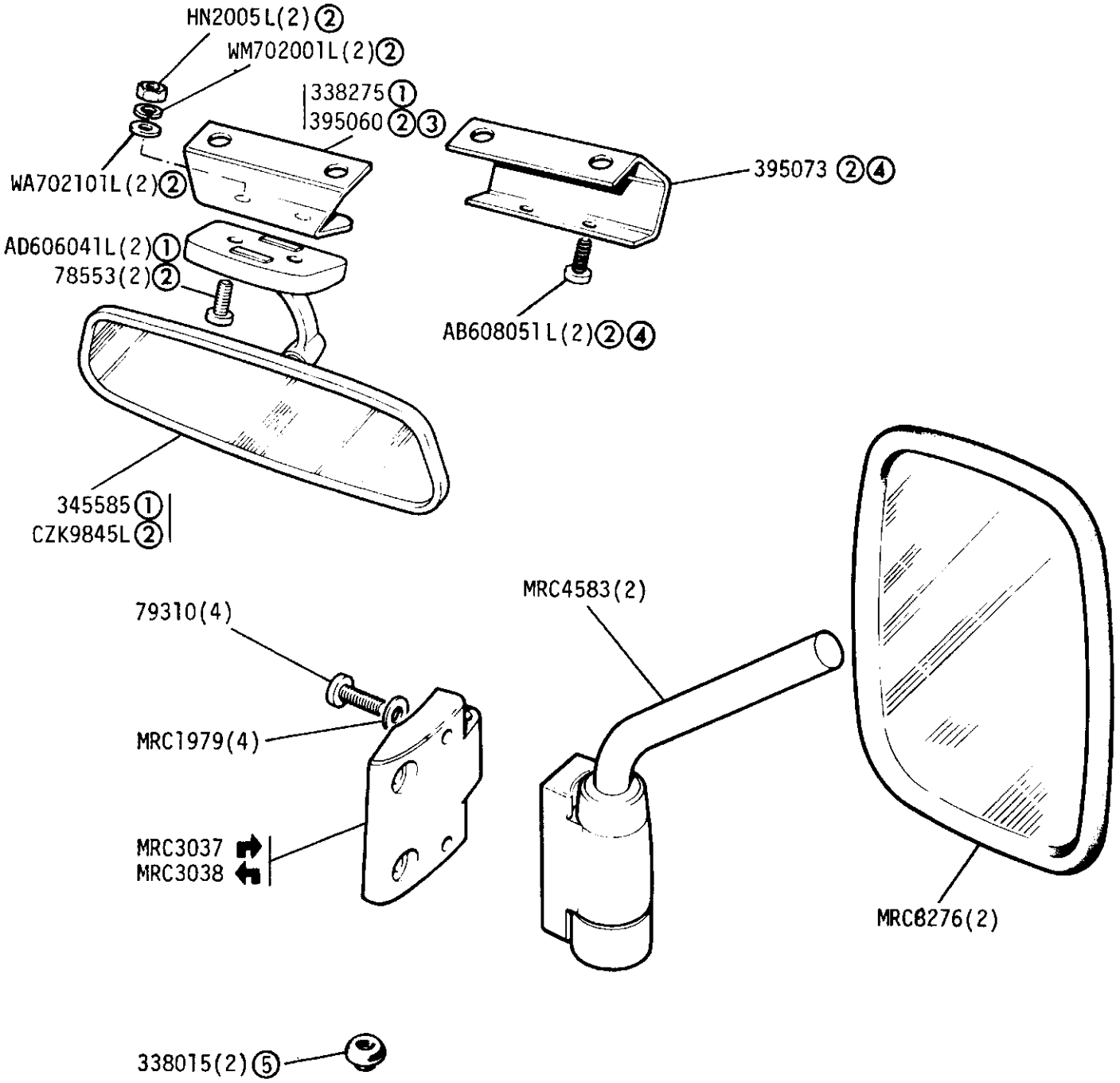

See frame 2G 07 for Wing Mirror.

① Upto November 1977
② From December 1977
③ Untrimmed vehicles
④ Trimmed vehicles
⑤ Fitted to front Wing Mirror mounting hole

GROUP L
BODY - Anti-Noise Rubbers 2¼ Litre Diesel from Engine No 90654451C onwards

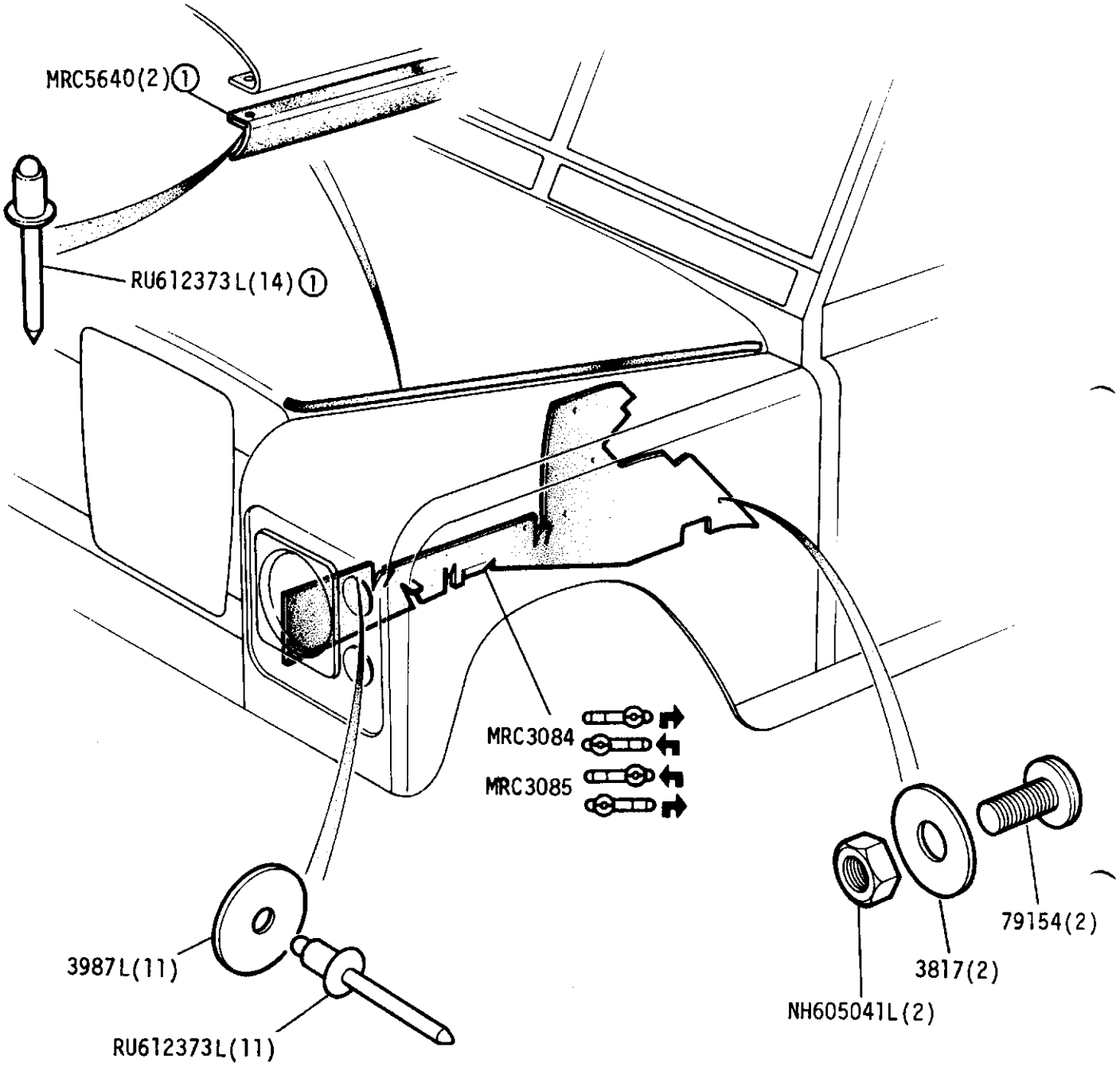

① Also specified for 88", 2.25L Petrol, Switzerland

GROUP L
BODY - Anti-Noise Rubbers and Bonnet Pad

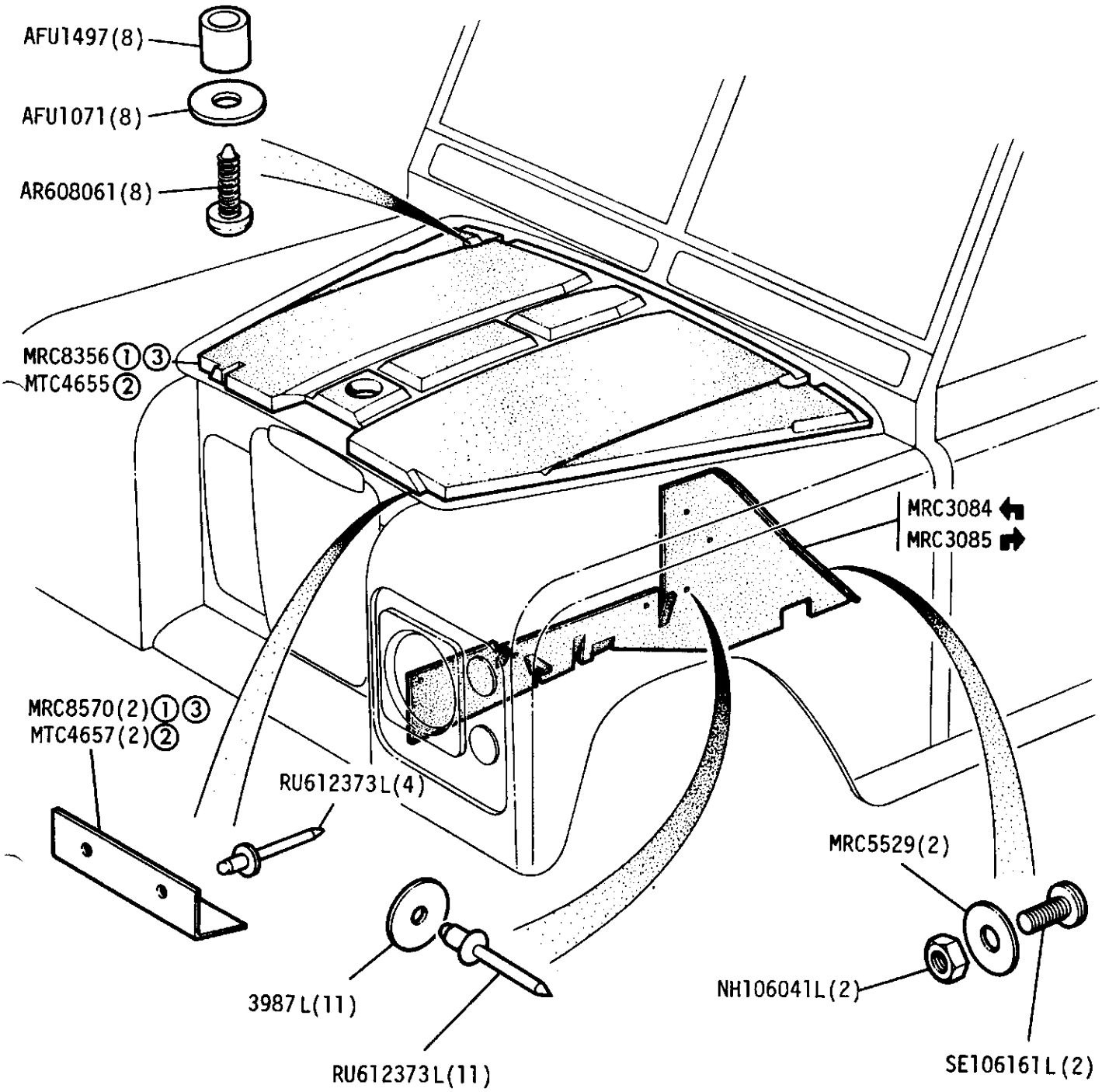

① Except Switzerland
② 109V8, Switzerland only, from Chassis No.SALLBCMV2AA175925
③ Also specified for 88", 2.25L Petrol, Switzerland.

GROUP M
BODY - Upper Dash Crash Padding up to October 1975

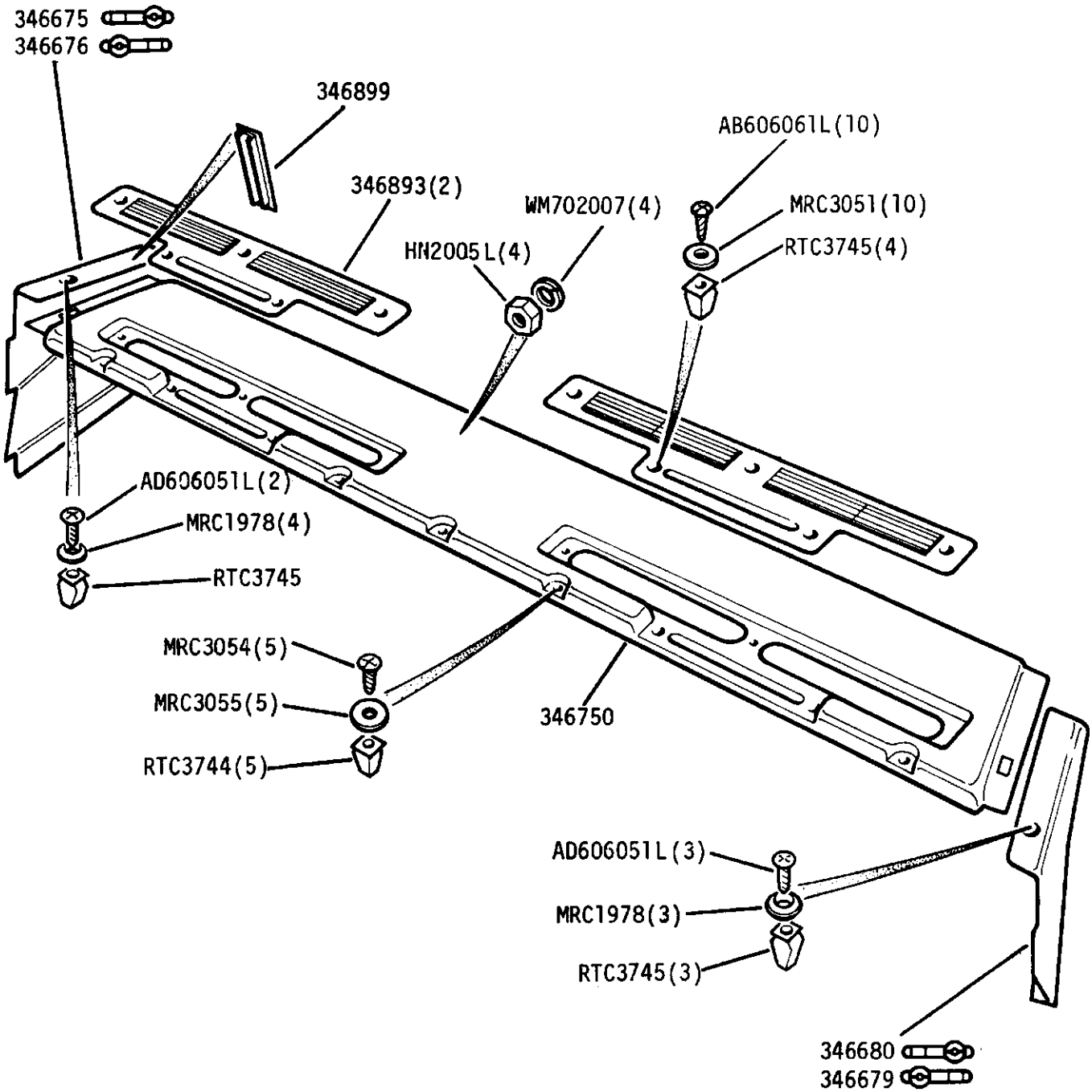

GROUP M
BODY - Upper Dash Crash Padding. From November 1975 onwards

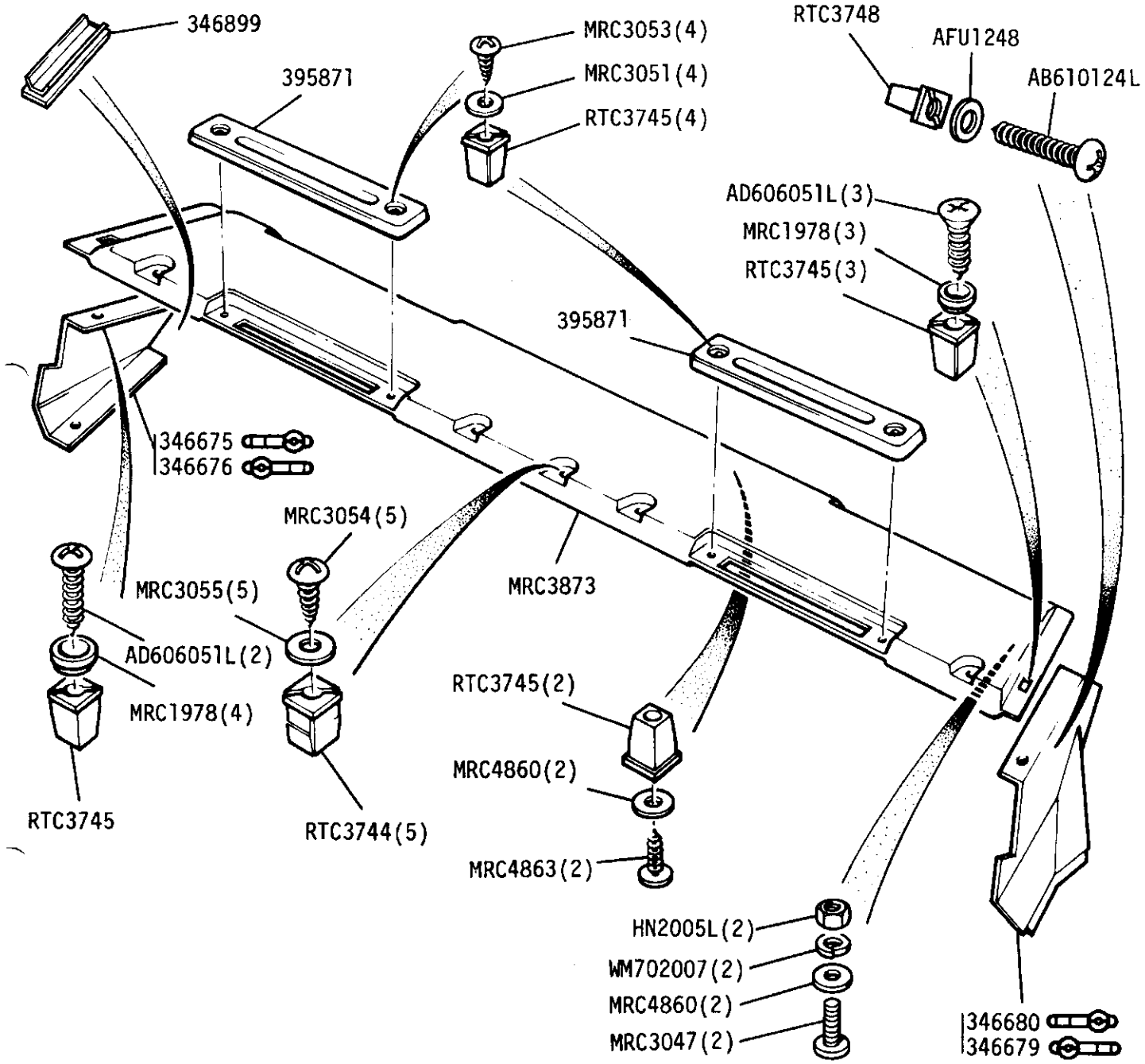

GROUP M
BODY - Parcel Tray and Lower Crash Padding

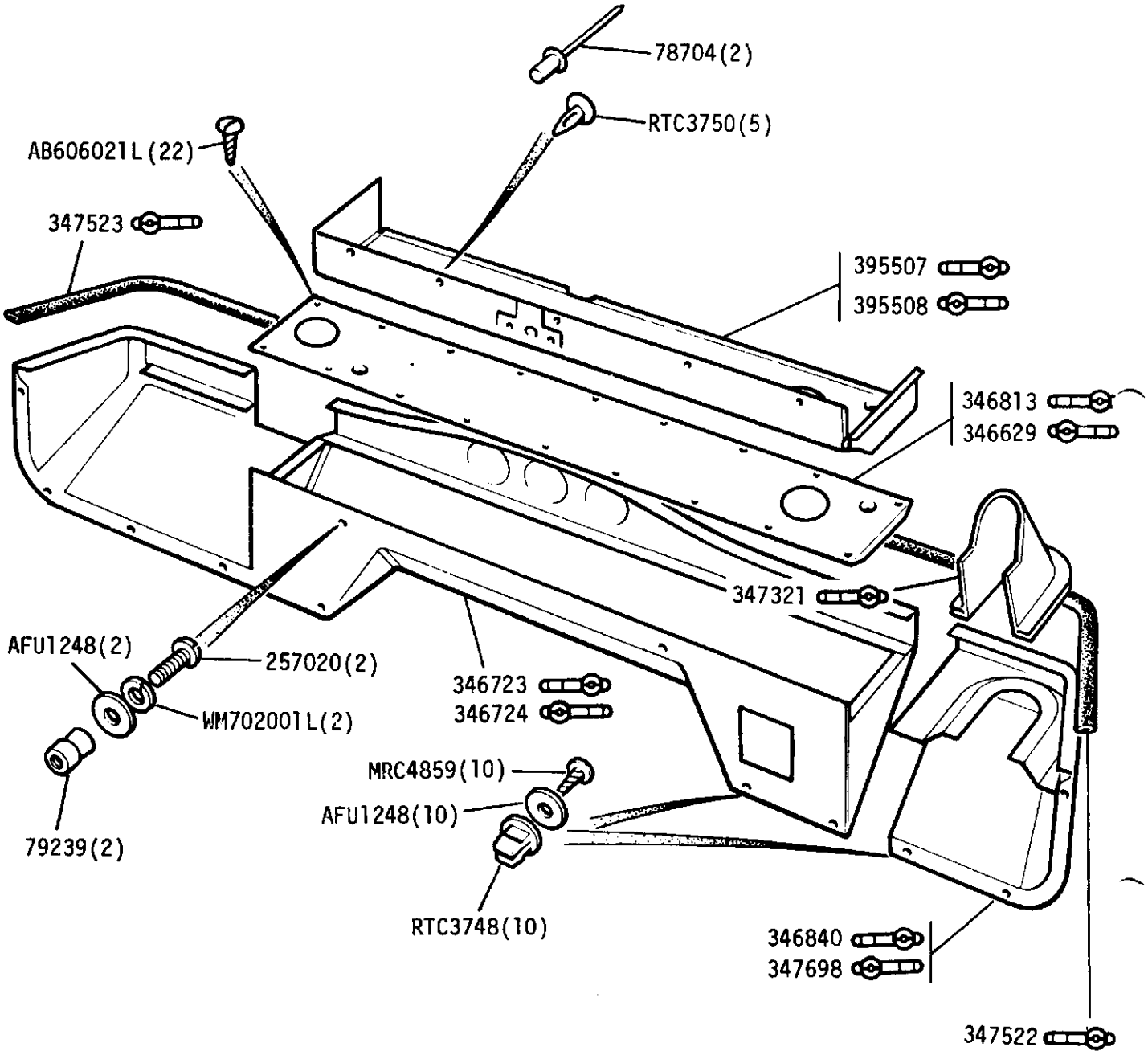

Trim strip - dash inner vent panel 92527 A/R

GROUP M
BODY - Auxiliary instrument cover 109 V8

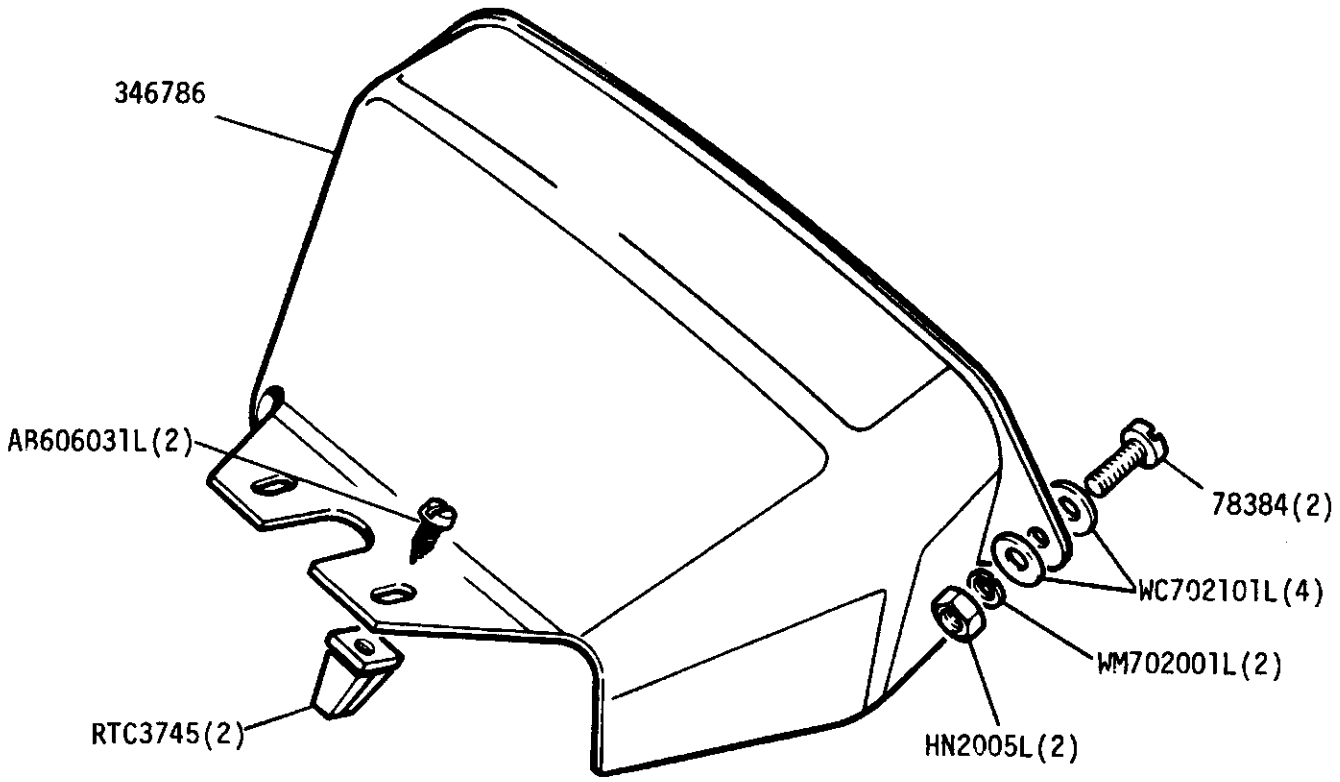

GROUP M
BODY - Dash and tunnel covering - 109 V8

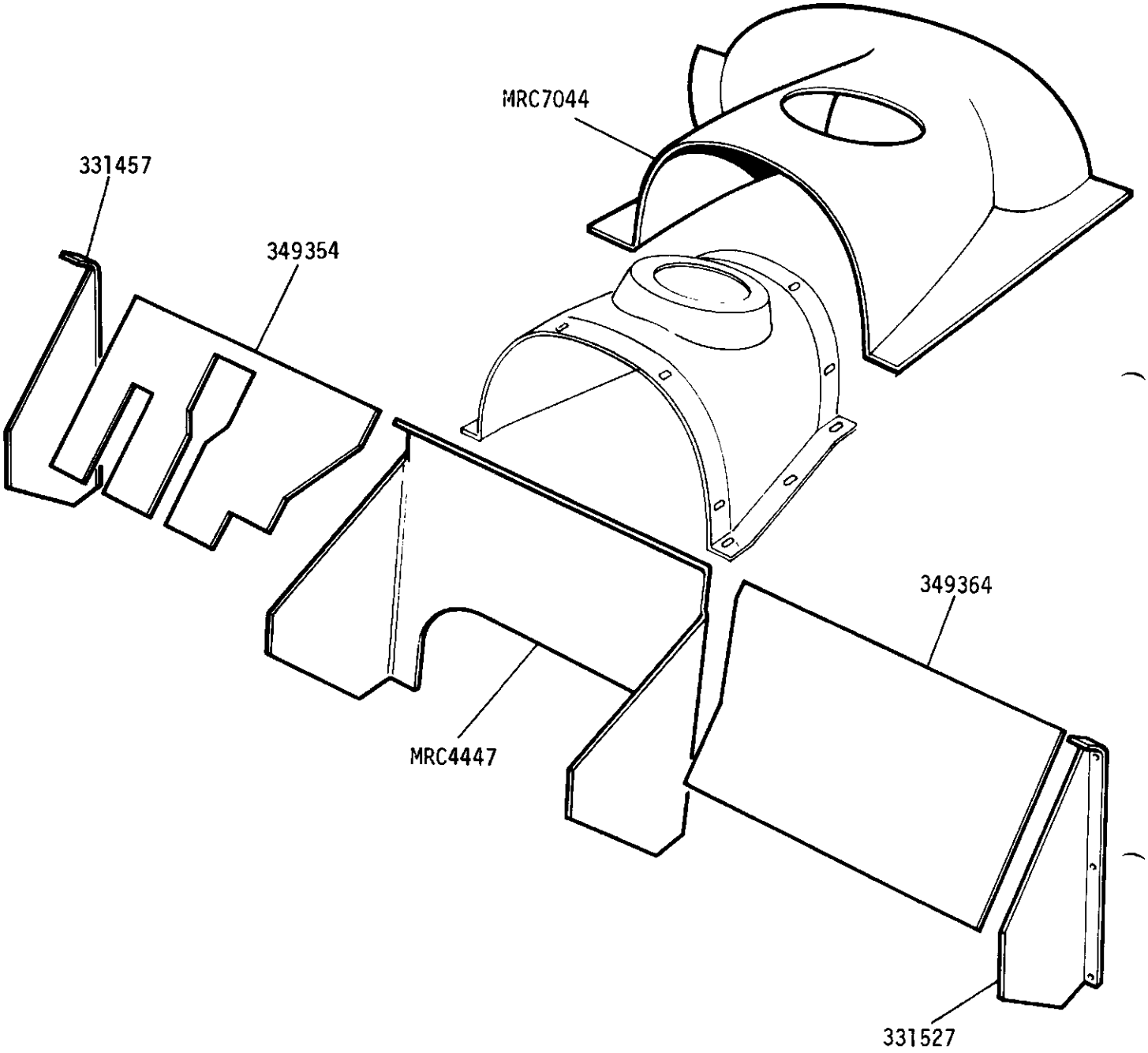

GROUP M
BODY - Dash covering retainers - 109V8

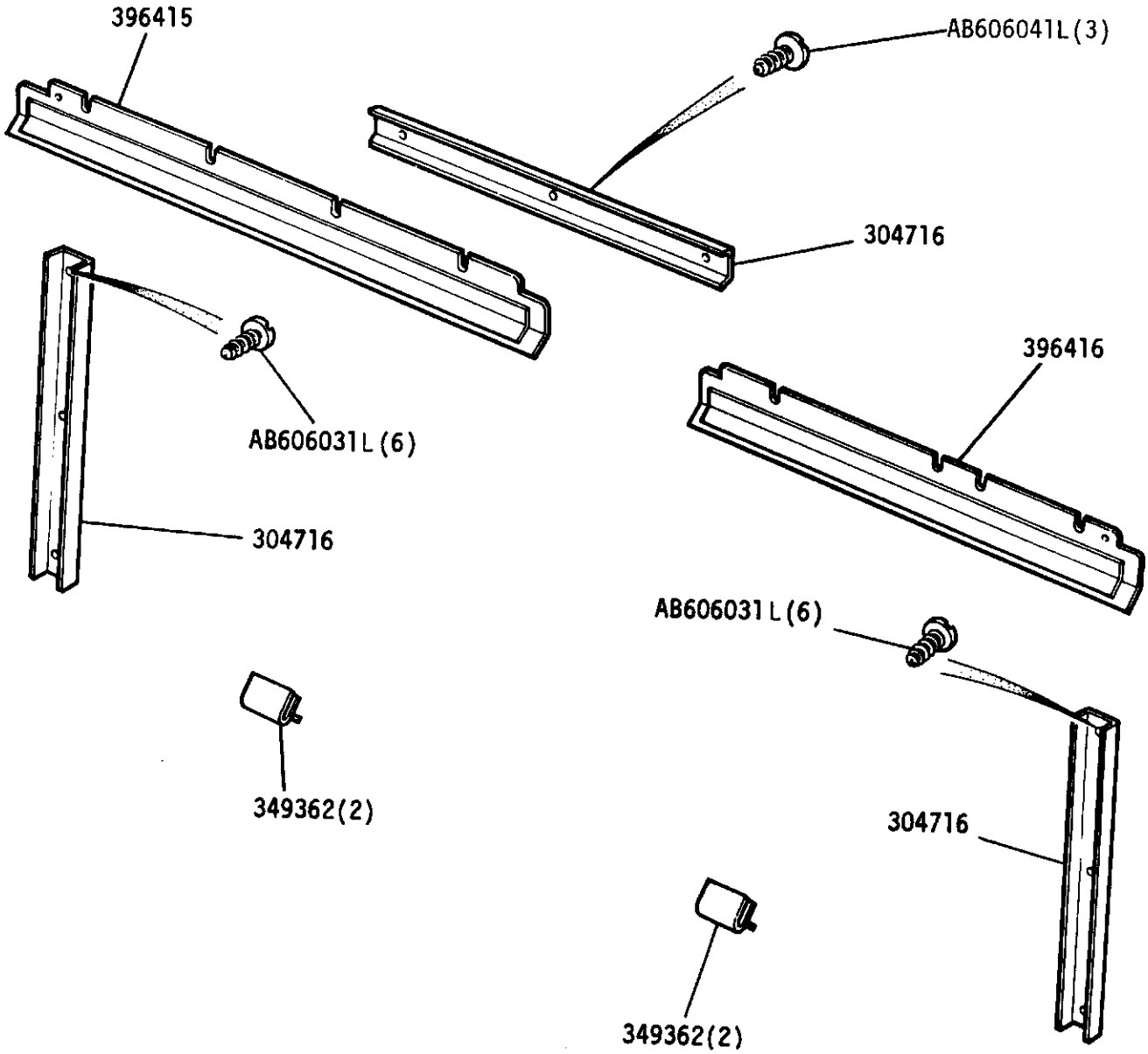

GROUP M
BODY - Floor Insulation

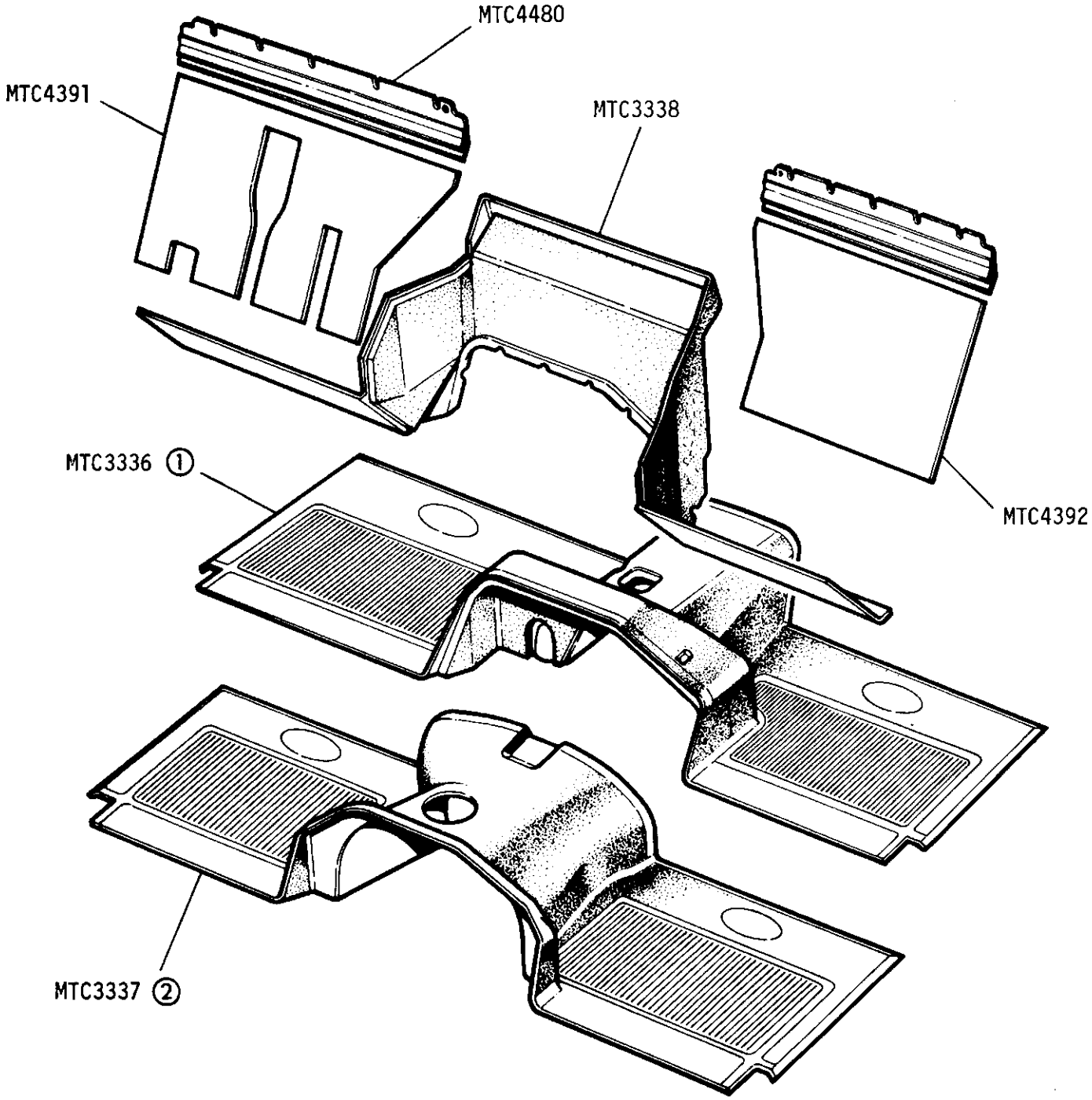

① County
② Truck Cab

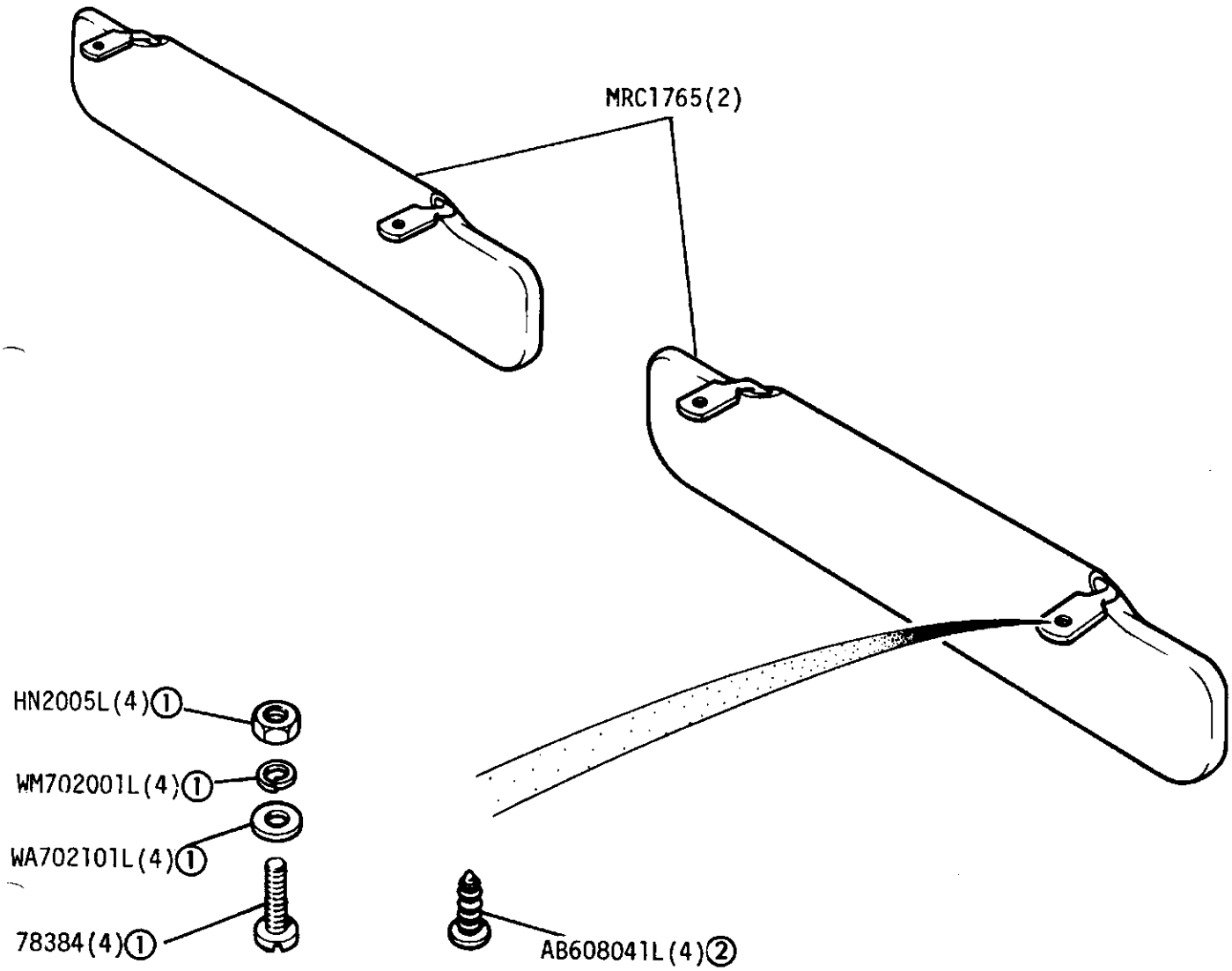

① Untrimmed vehicles
② De-Luxe trimmed vehicles

GROUP M

BODY - Roof Trim - 88in Station Wagon

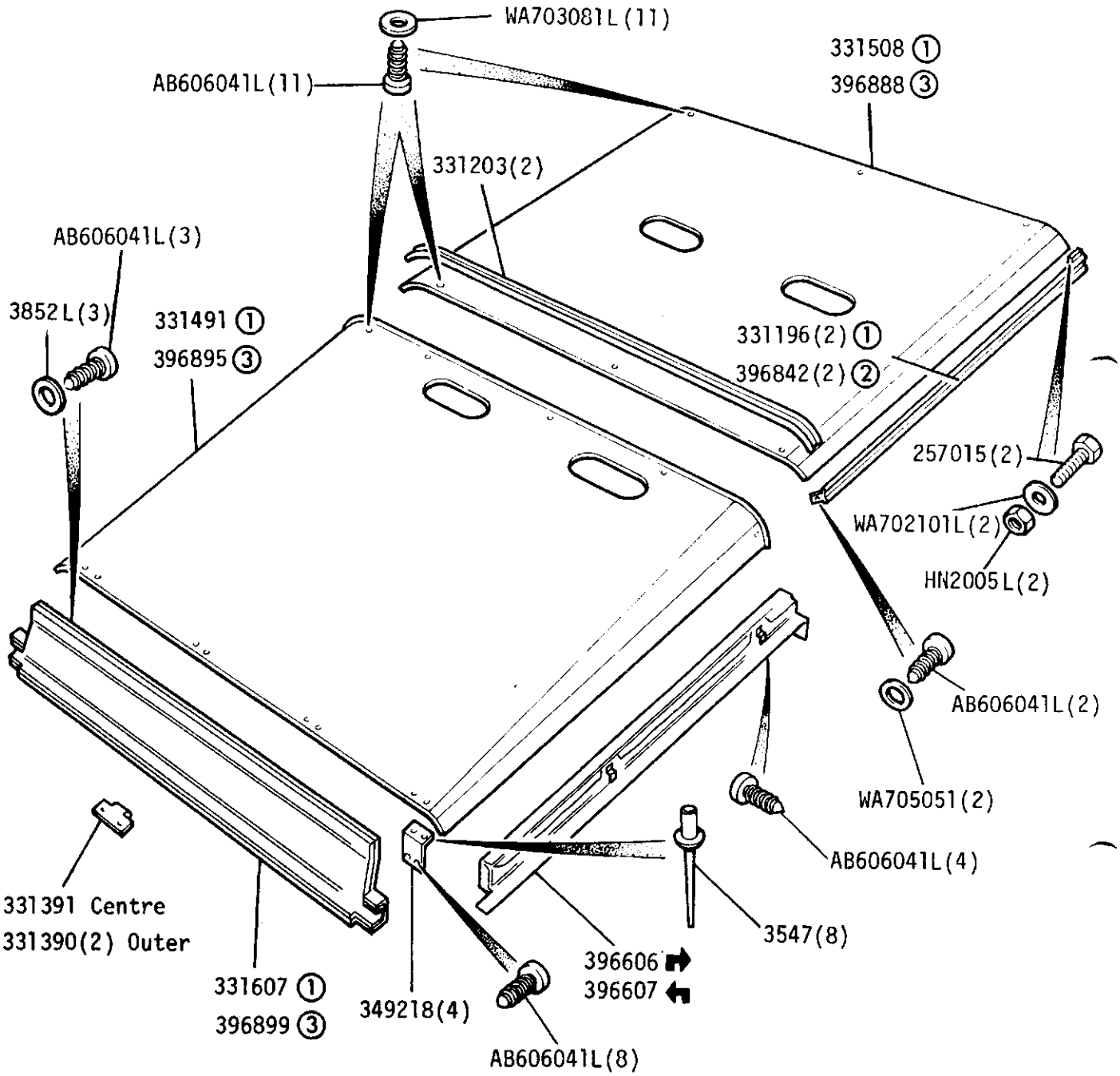

① White
② Limestone
③ Oatmeal

Roof Lamp Complete - 265295
Roof Lamp Pad Assy - 334111

GROUP M

BODY - Roof Trim - 88in Station Wagon "County"

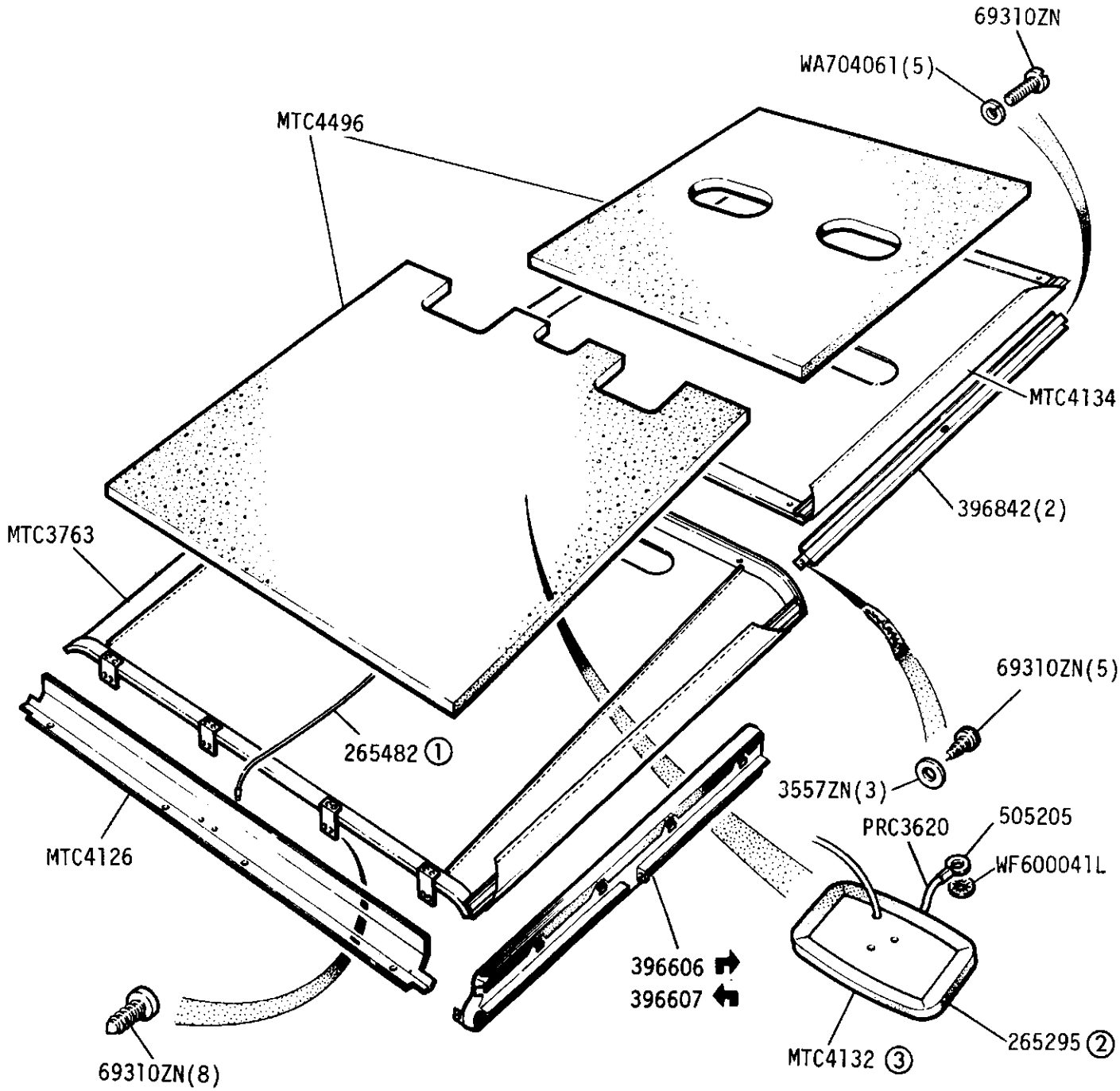

① Roof lamp lead

② Roof lamp complete

③ Roof lamp pad assy

GROUP M
BODY - Roof Trim - 109in Station Wagon

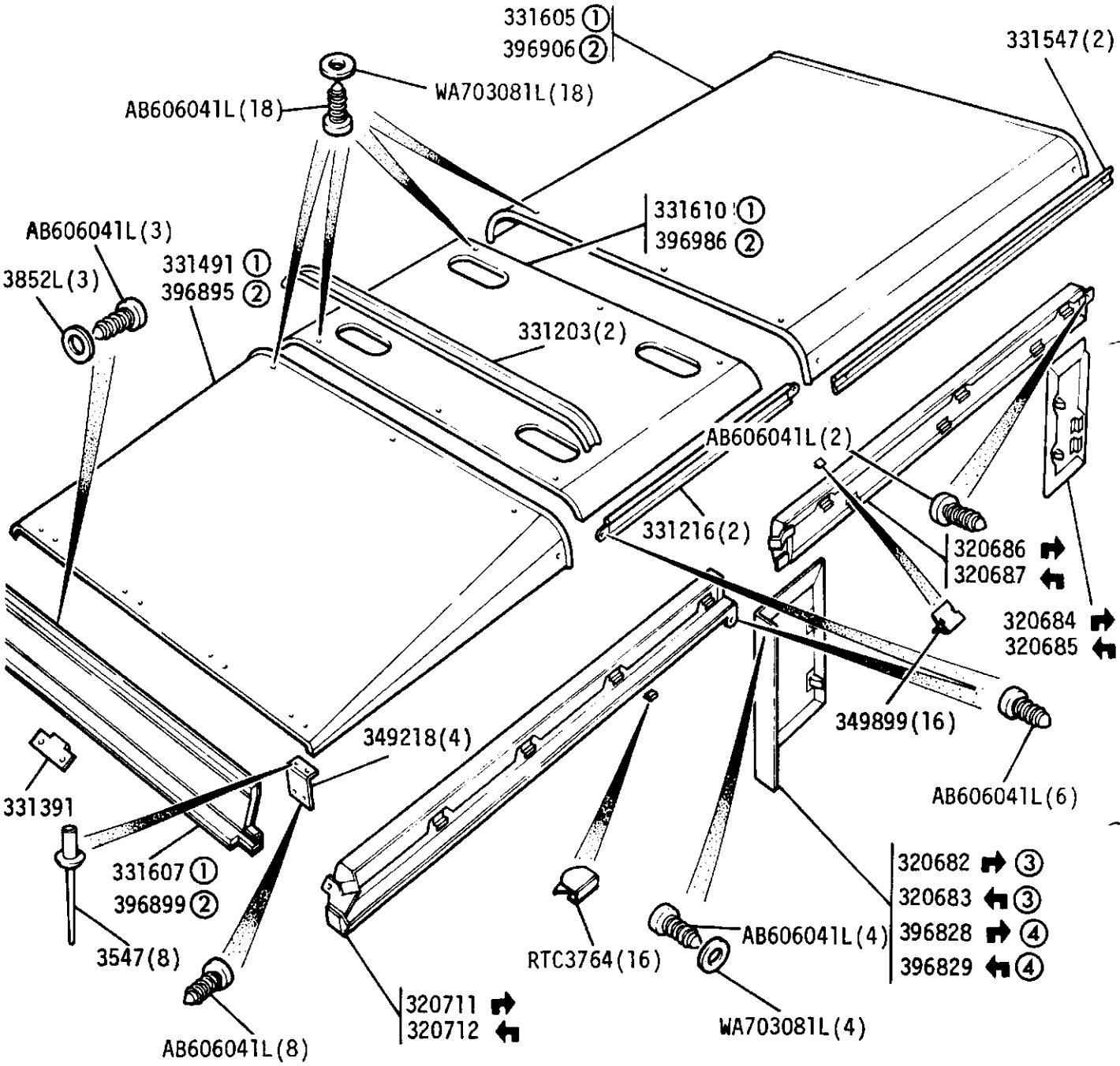

① White
② Oatmeal
③ Up to September 1973
④ From October 1973 onwards

Roof Lamp Complete - 265295
Roof Lamp Pad Assy - 334111

GROUP M

BODY - Roof Trim - 109in Station Wagon "County"

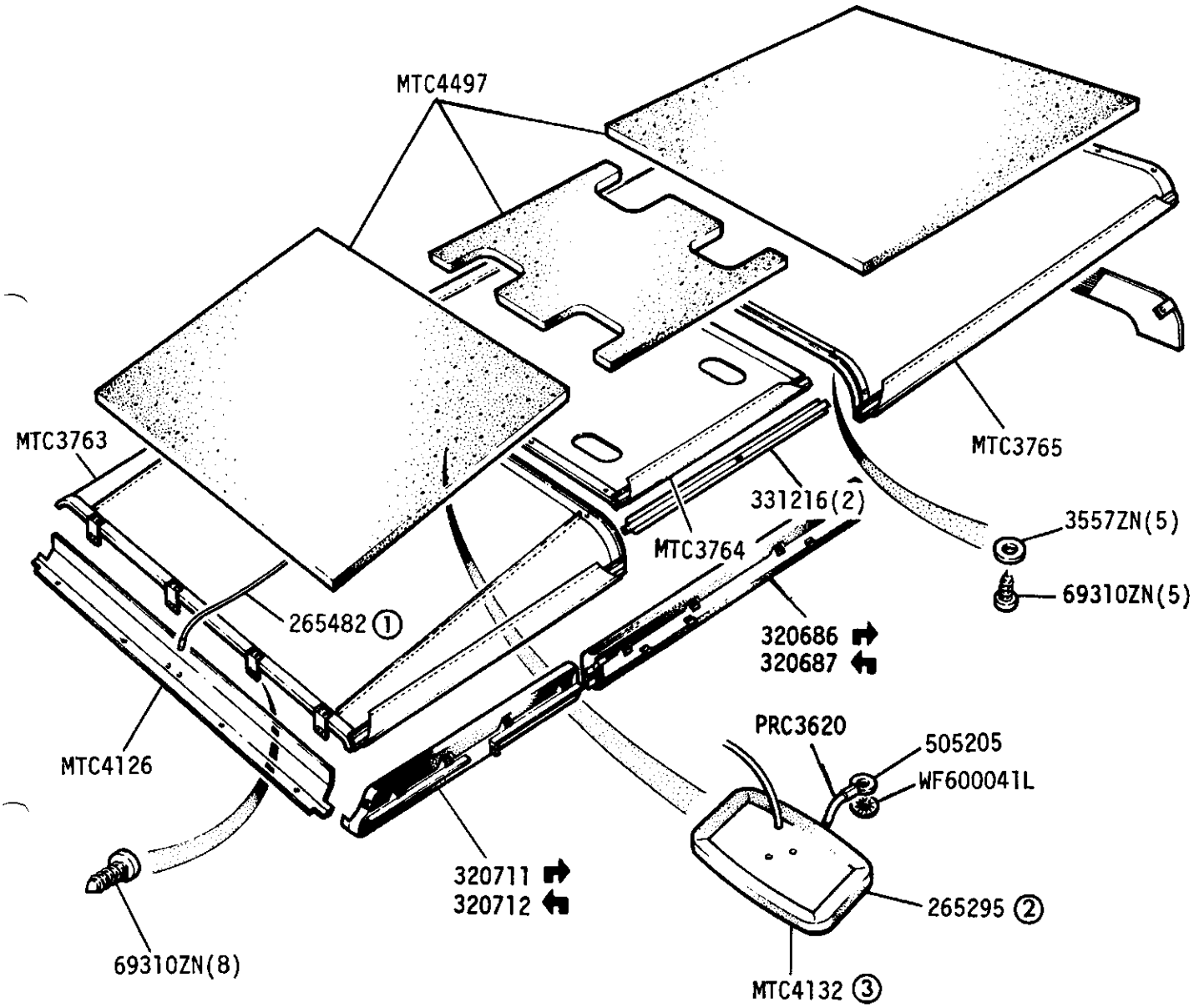

① Roof lamp lead

② Roof lamp complete

③ Roof lamp pad assy

GROUP M
BODY - Rear Body Trim - 88in Station Wagon

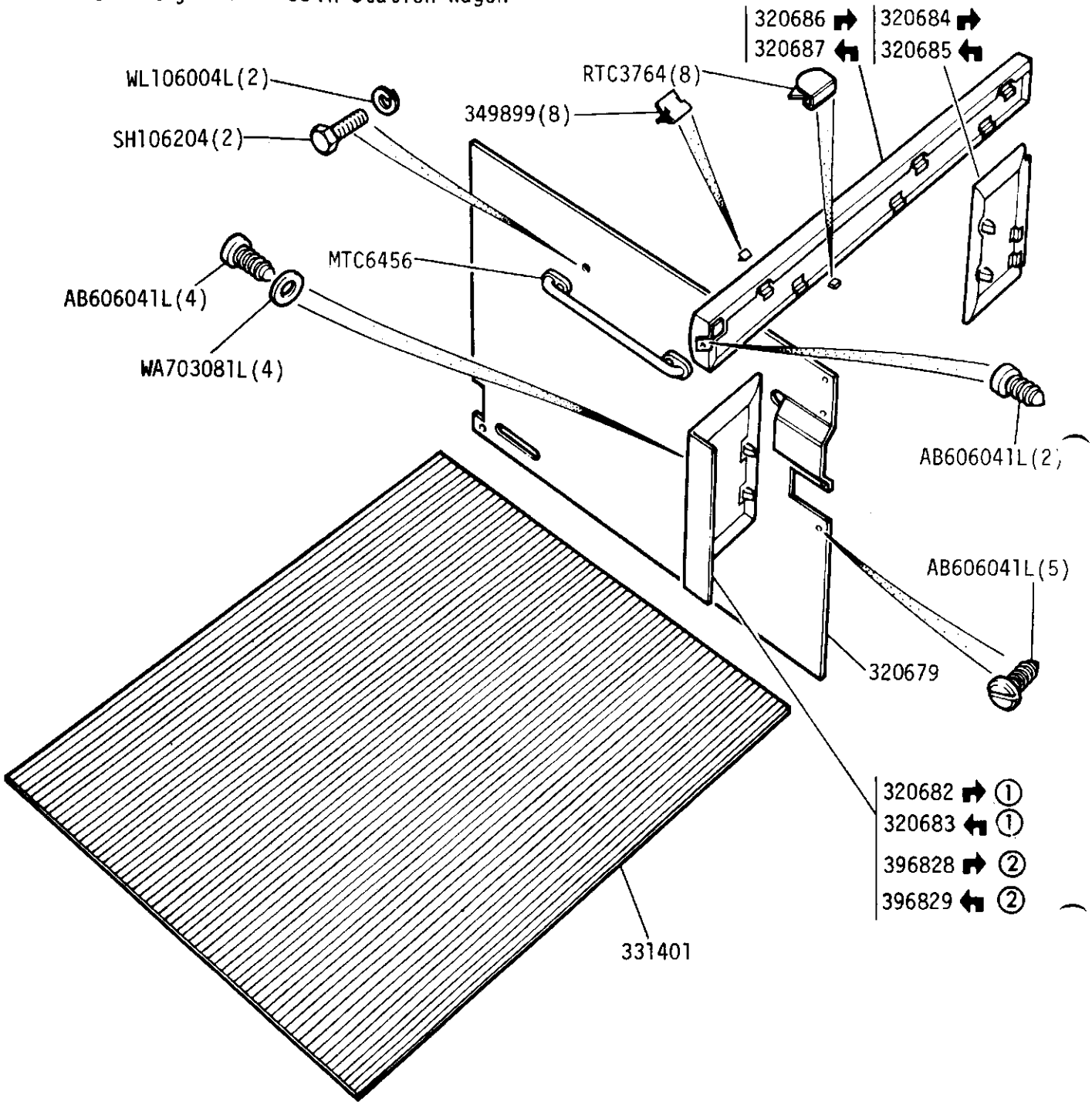

① Up to September 1973
② From October 1973 onwards

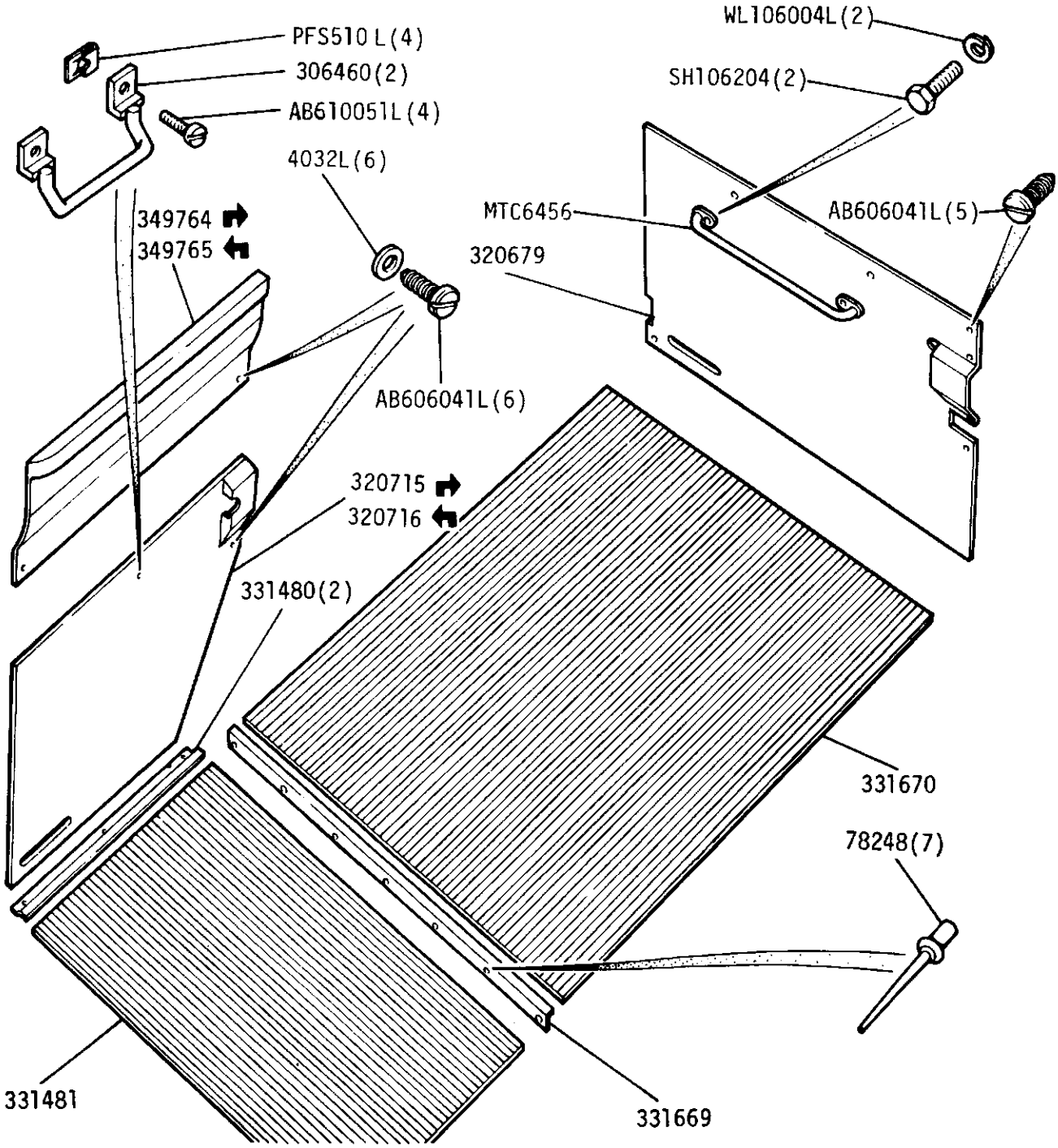

MRC3592 Front mat - RH
MRC3593 Front mat - LH 109V8

GROUP M
BODY - Seat Squabs

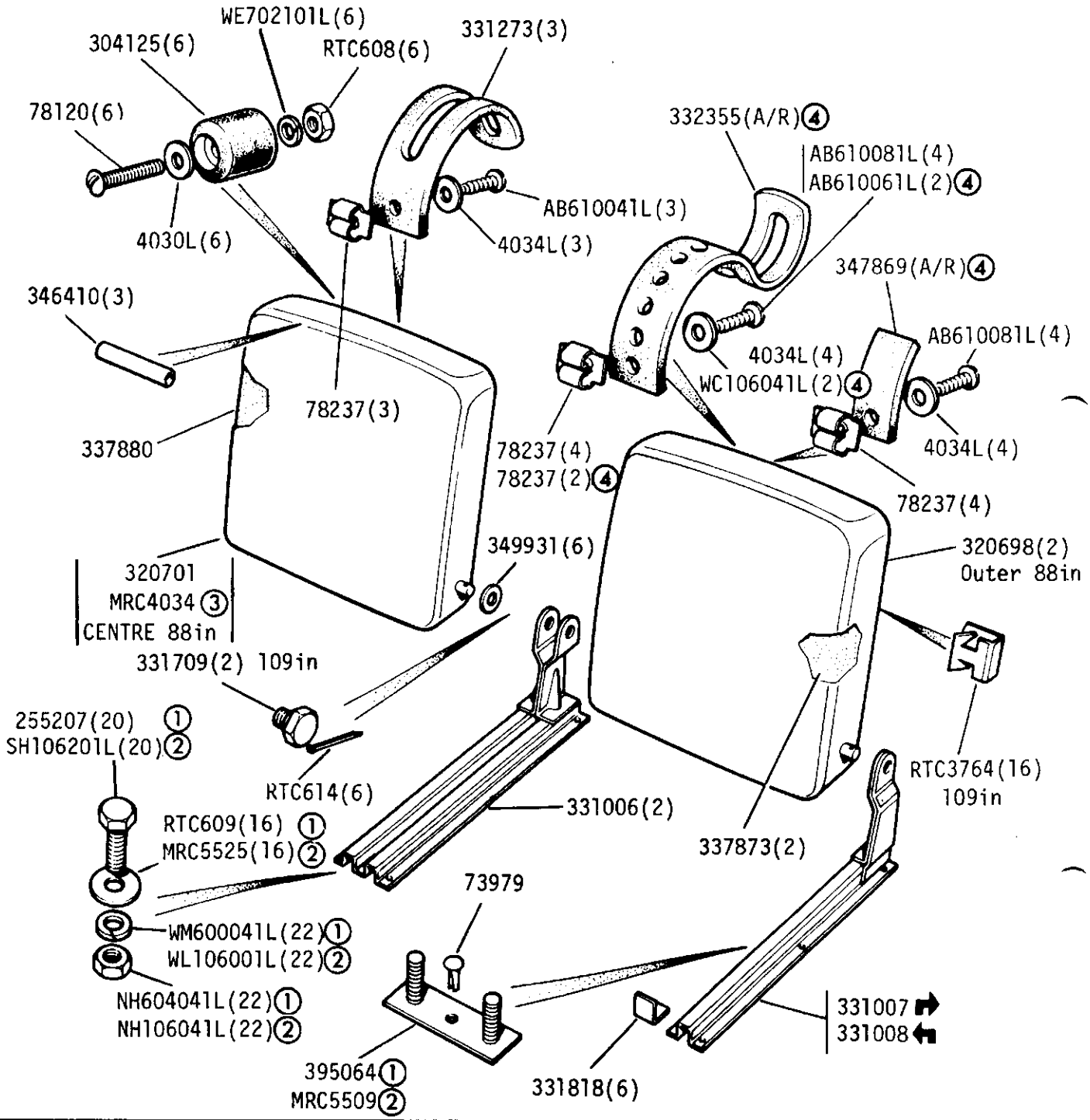

Seat Squab - Drivers	320702	109in except Station Wagon	① UNF
Seat Squab - Passengers	320698		② METRIC
Seat Squab - Centre	320701		③ To ECE 17
Seat Squab - Centre	MRC4034③		④ 109in St.Wagon
Seat Squab - Drivers	320708	109in Station Wagon	
Seat Squab - Passengers	320709		
Seat Squab - Centre	320710		
Seat Squab - Centre	MTC3183③		

GROUP M
BODY - Seat Cushion - Non adjustable

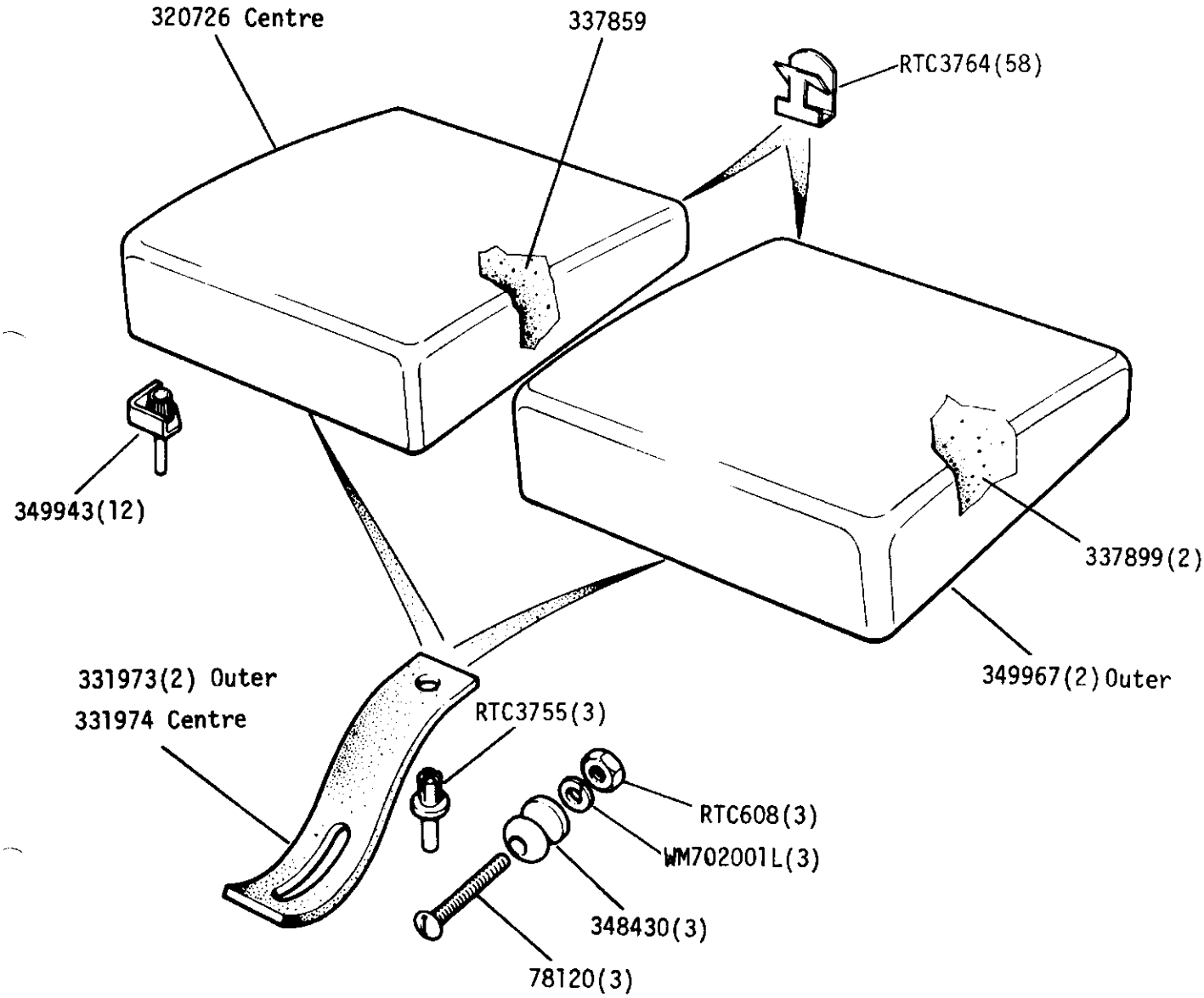

GROUP M
BODY - Seat Cushion Adjustable 109in only

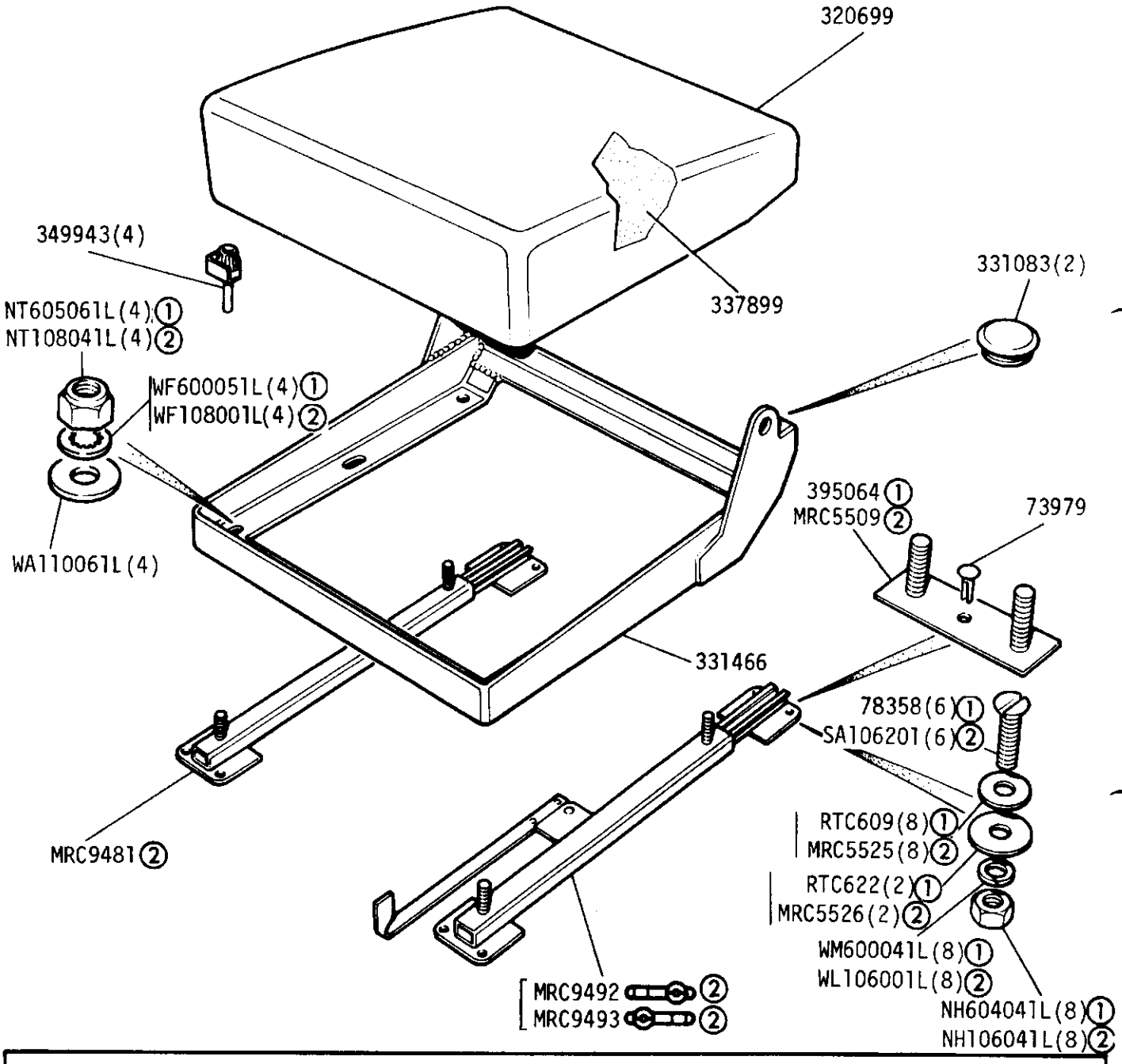

① UNF
② Metric

GROUP M
BODY - Front Seat Squabs109 V8 - Up to February 1980

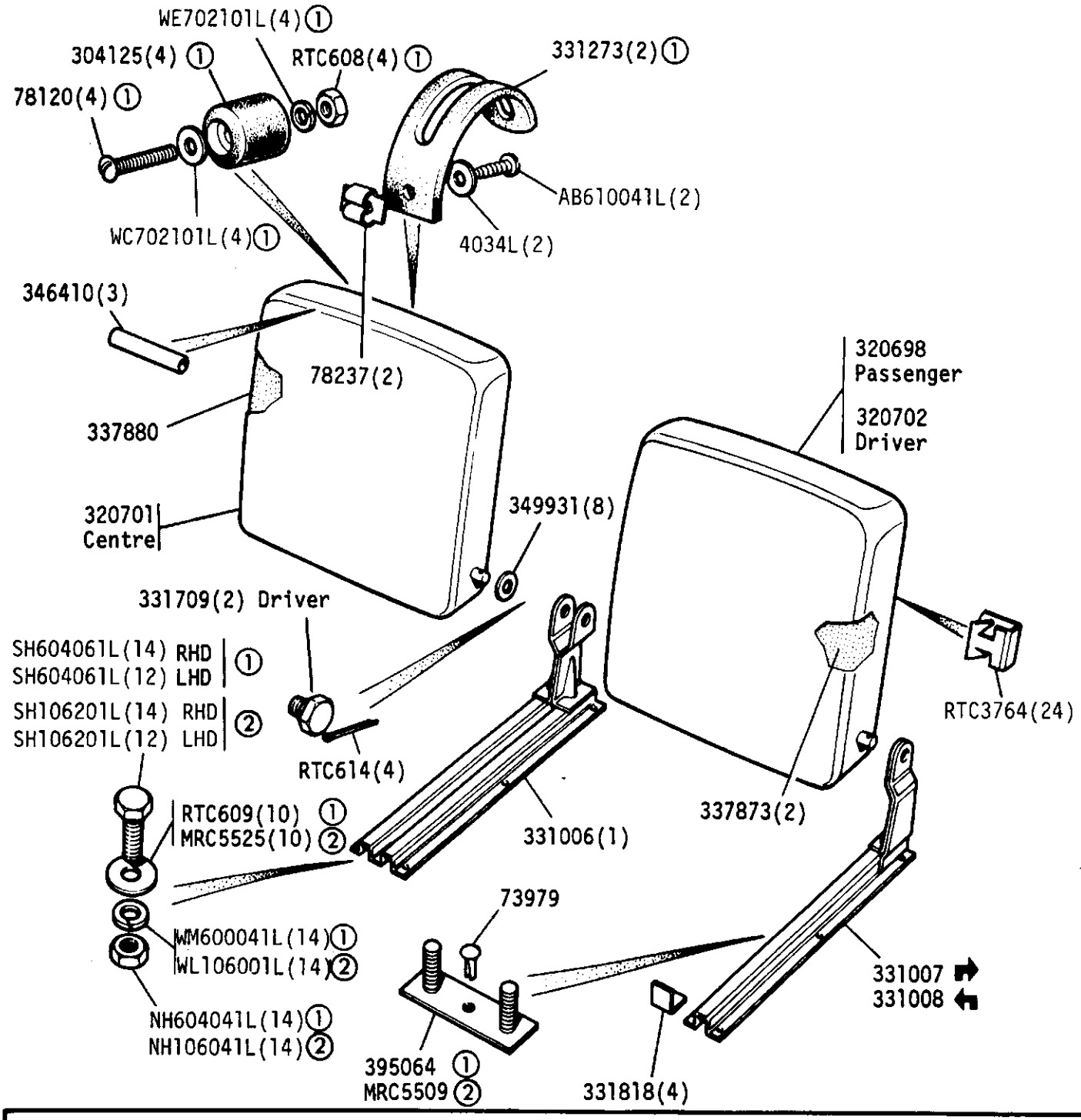

①Except Station Wagon
② Station Wagon

GROUP M
BODY - Front Seat Cushion Driver 109 V8

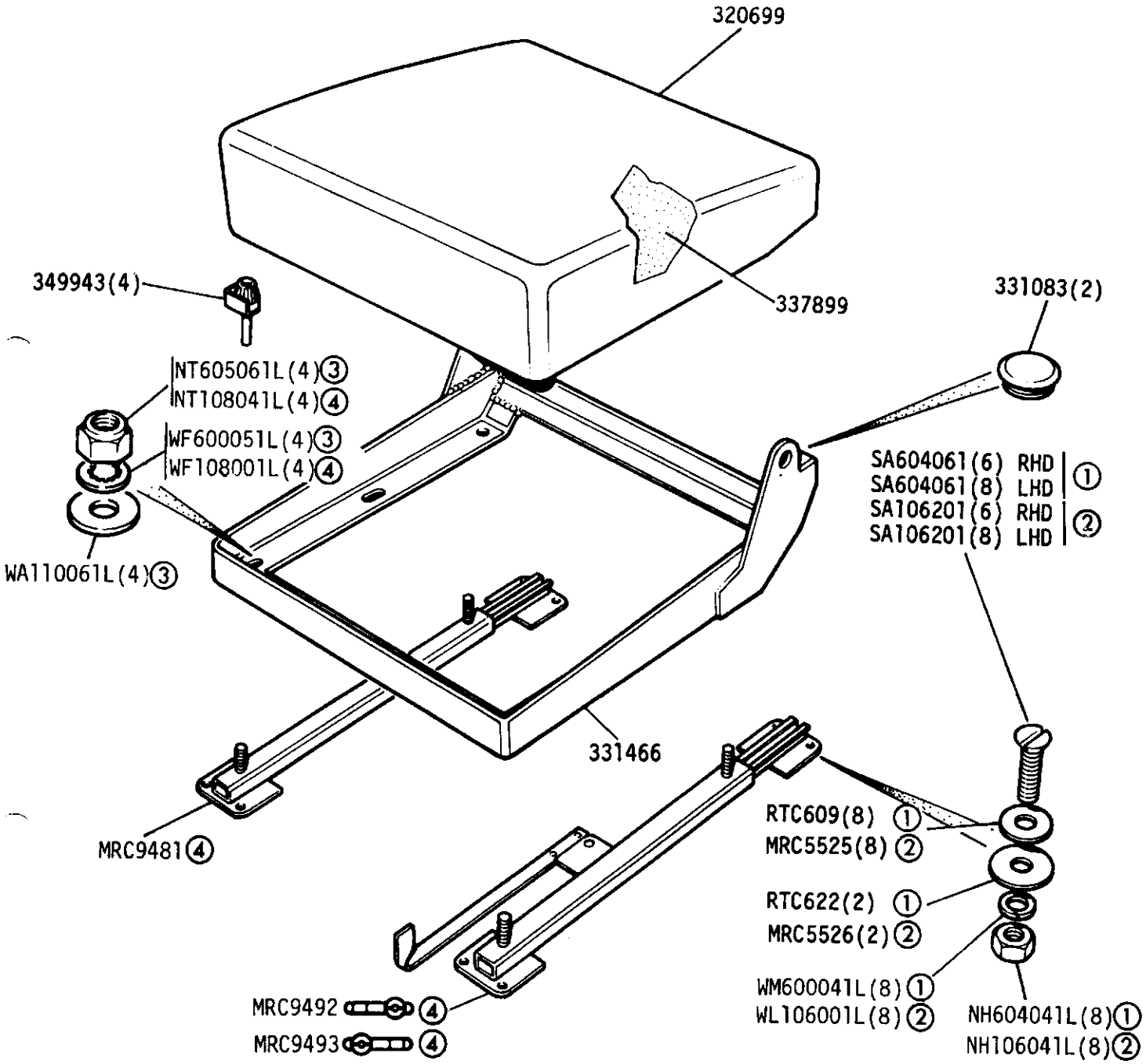

① Except Station Wagon
② Station Wagon
③ UNF
④ Metric

GROUP M
BODY - Front Seat Cushion, Centre and Passenger, 109 V8 - Up to February 1980

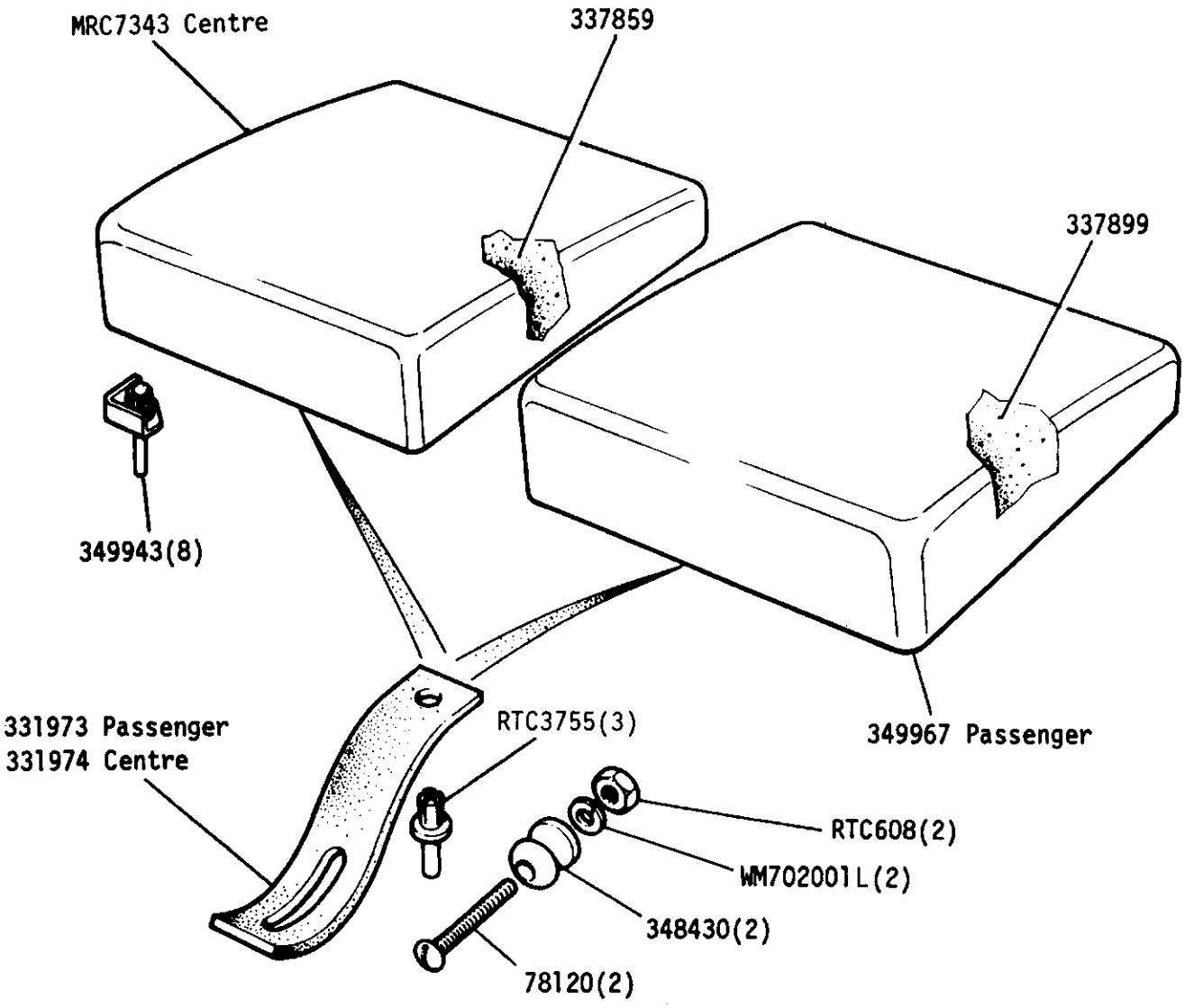

GROUP M
BODY - Front seats, drivers and passengers, 109 V8
From March 1980 onwards

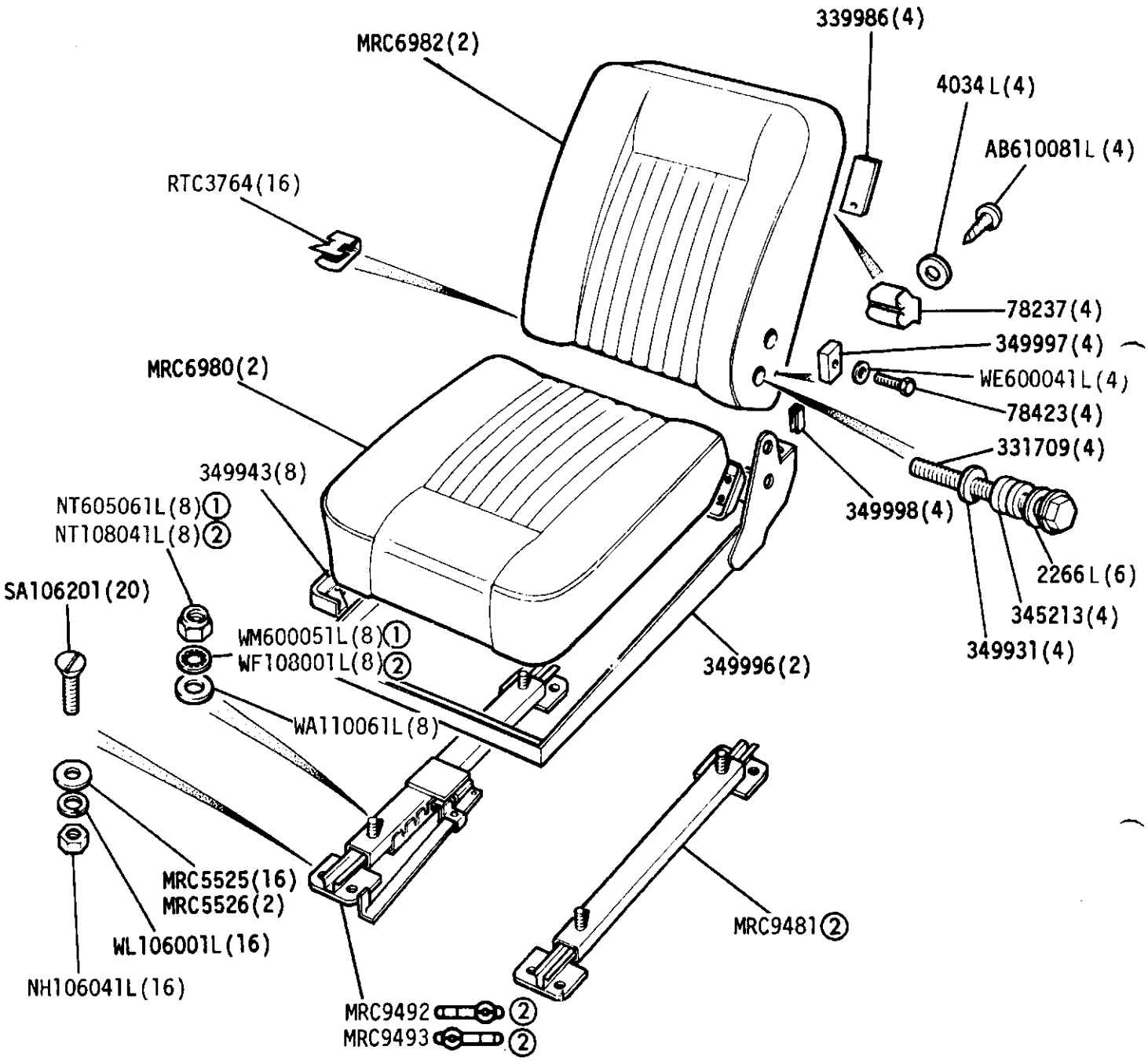

① UNF
② Metric

GROUP M
BODY - Front seat, centre, 109 V8
From March 1980 onwards

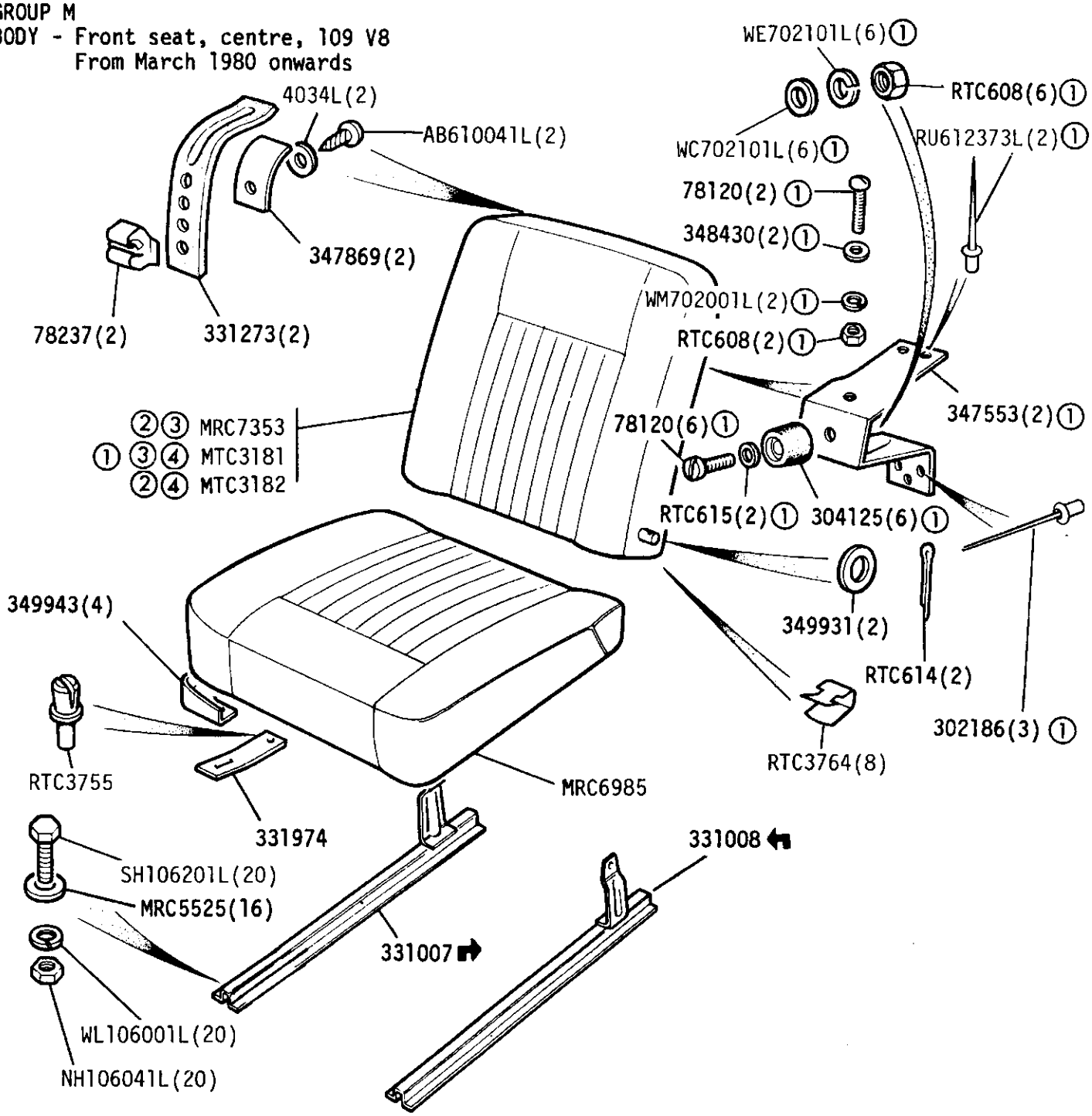

① Except Station Wagon
② Station Wagon
③ Up to Dec 1981
④ Jan 1982 onwards

GROUP M
BODY - Front Outer Seats - 'County'

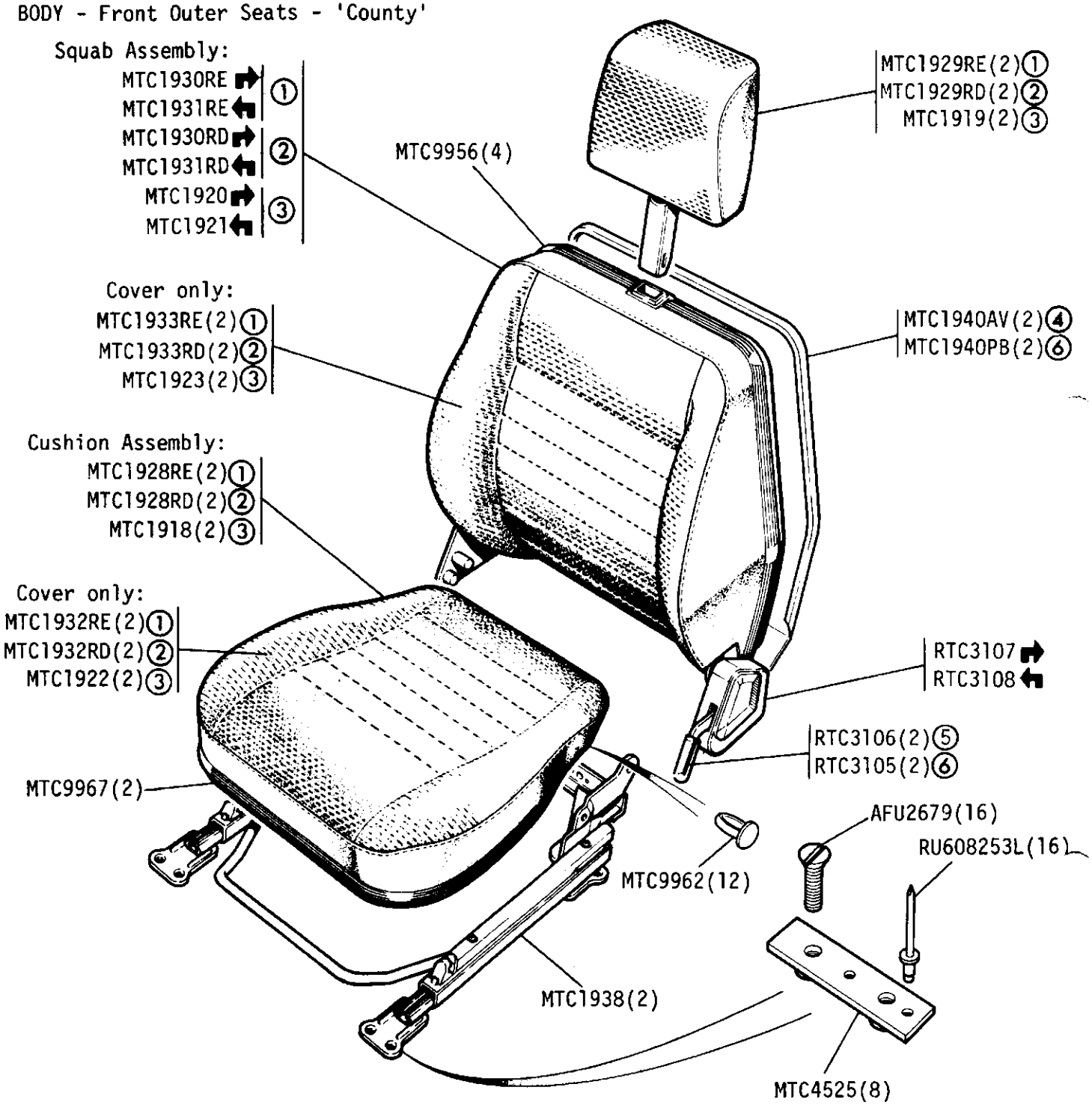

①Grey/Black Cloth
②Brushwood/Berber Cloth
③Black Ambla
④Brushwood
⑤Grey
⑥Black
⑦Fitted on Cab Rear Panel, (Cab Vehicles Only.)

Retaining Rod Assembly (under Cushion):- RTC4102(2)

Rubber Buffer - MRC5016(2)⑦
Plain Washer - WA106041L(4)⑦
Self Tapping Screw - AB614061L(4)⑦

GROUP M
BODY - Front Centre Seat - 'County'

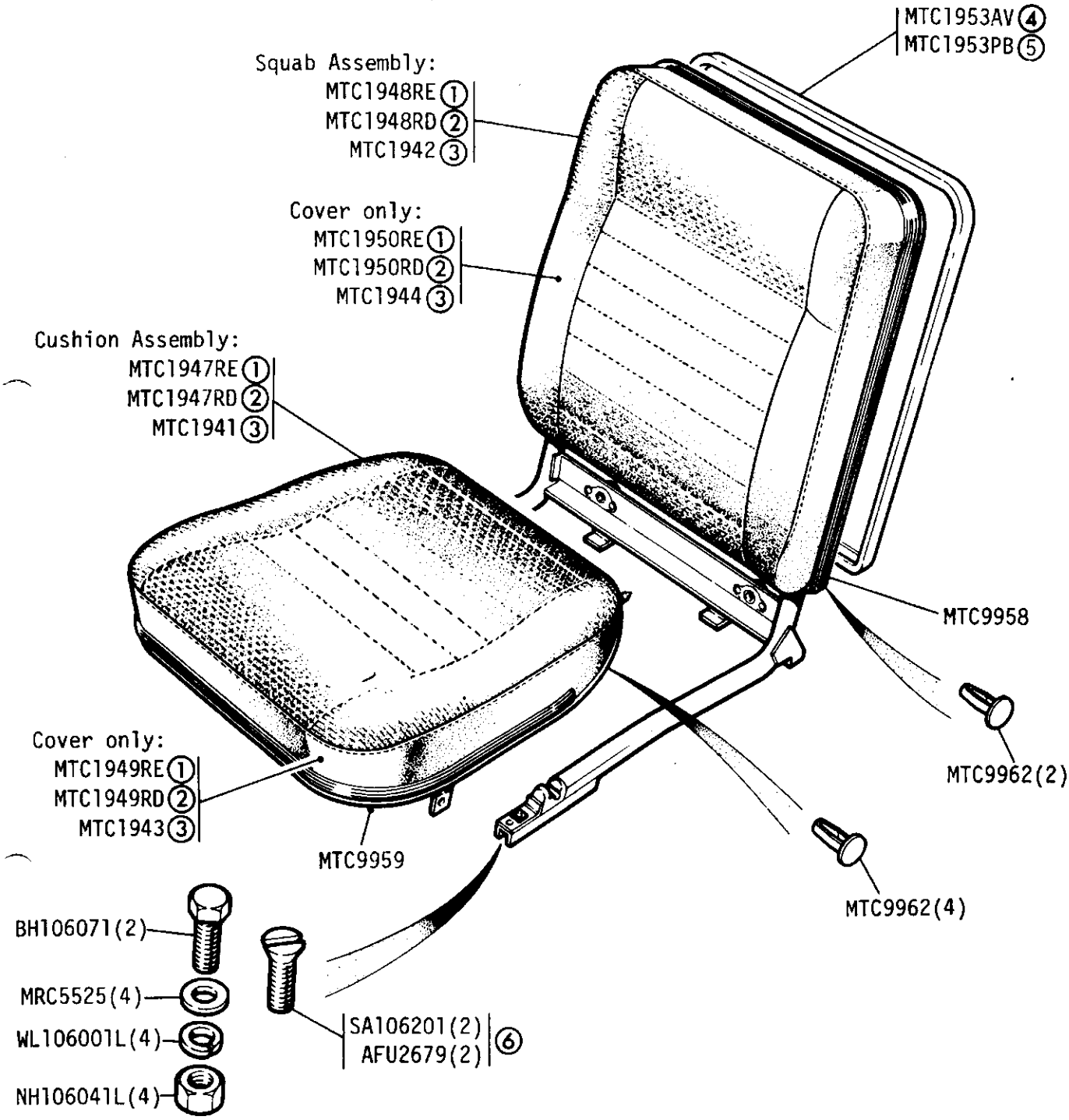

① Grey/Black Cloth
② Brushwood/Berber Cloth
③ Black Ambla
④ Brushwood
⑤ Black
⑥ Alternatives

GROUP M
BODY - Seat Belts Driver and Passenger-single handed action

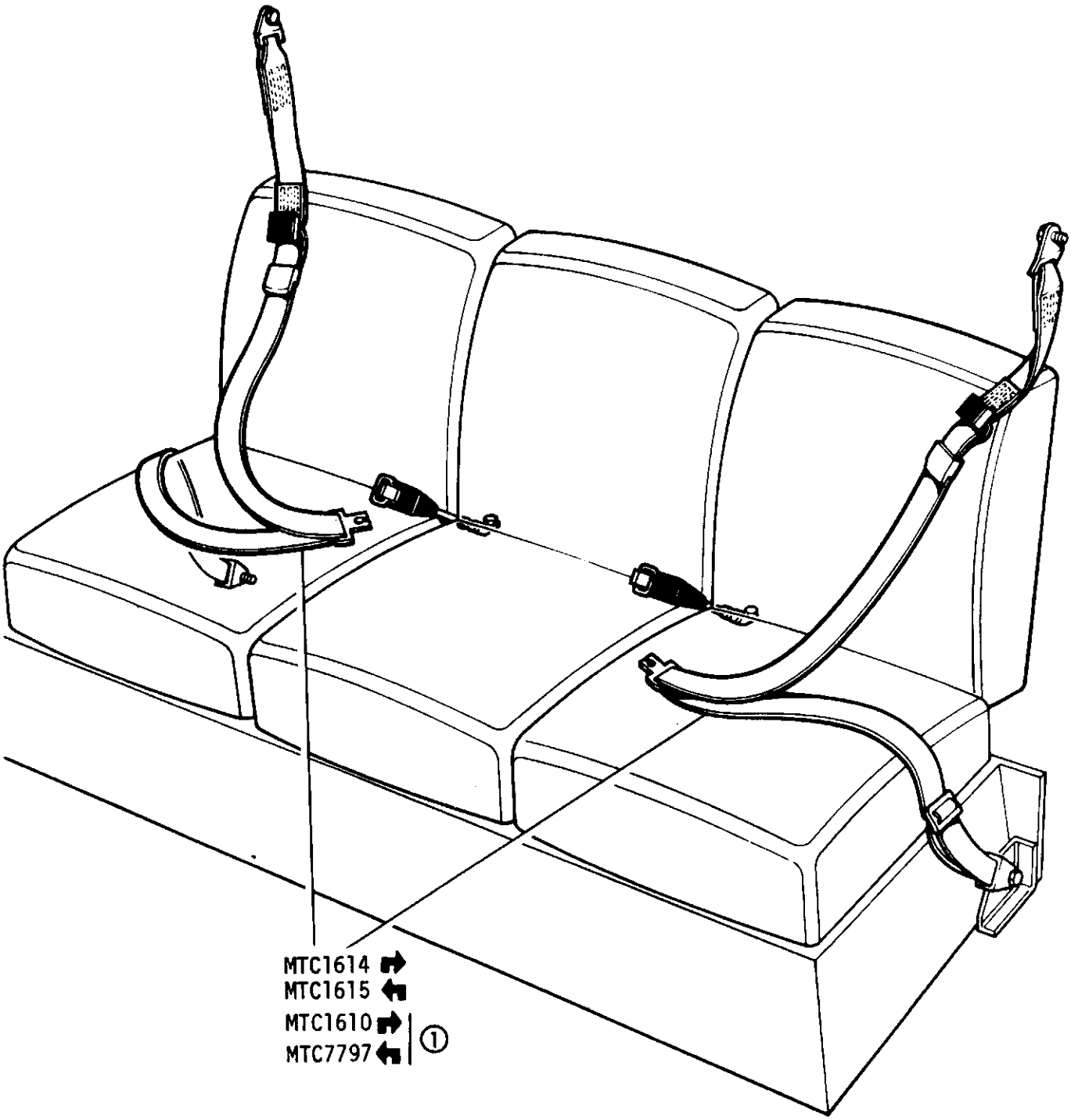

①Audible Warning Seat Belts (88in Saudi Arabia only)

ROUP M

BODY - Front seat driver and passengers harness anchorages

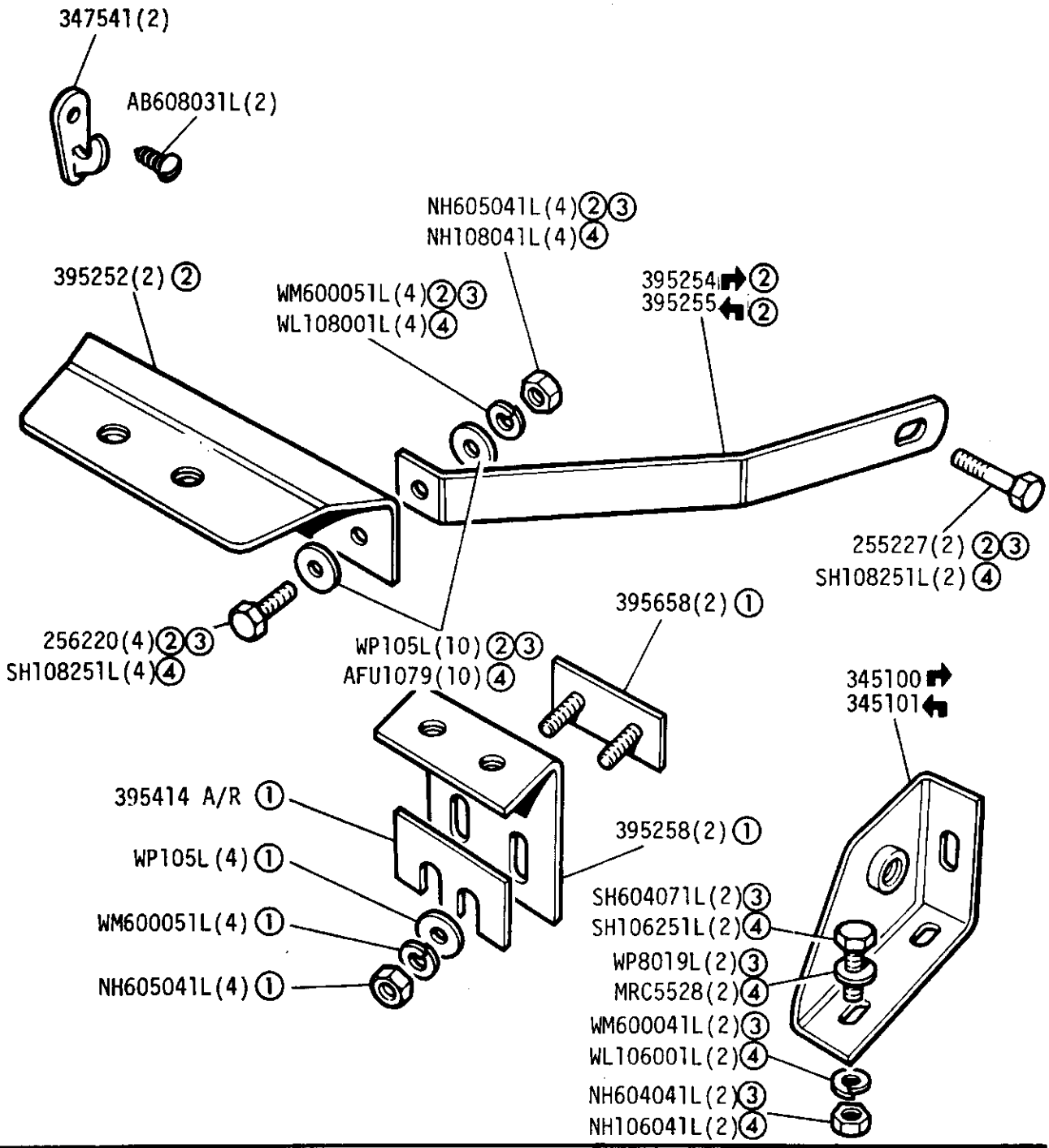

① 88in Petrol and Diesel
② 109 2¼ Petrol and Diesel and 109 2.6 Petrol except Station Wagon
③ UNF
④ METRIC

GROUP M
BODY - Raised shoulder seat harness anchorages

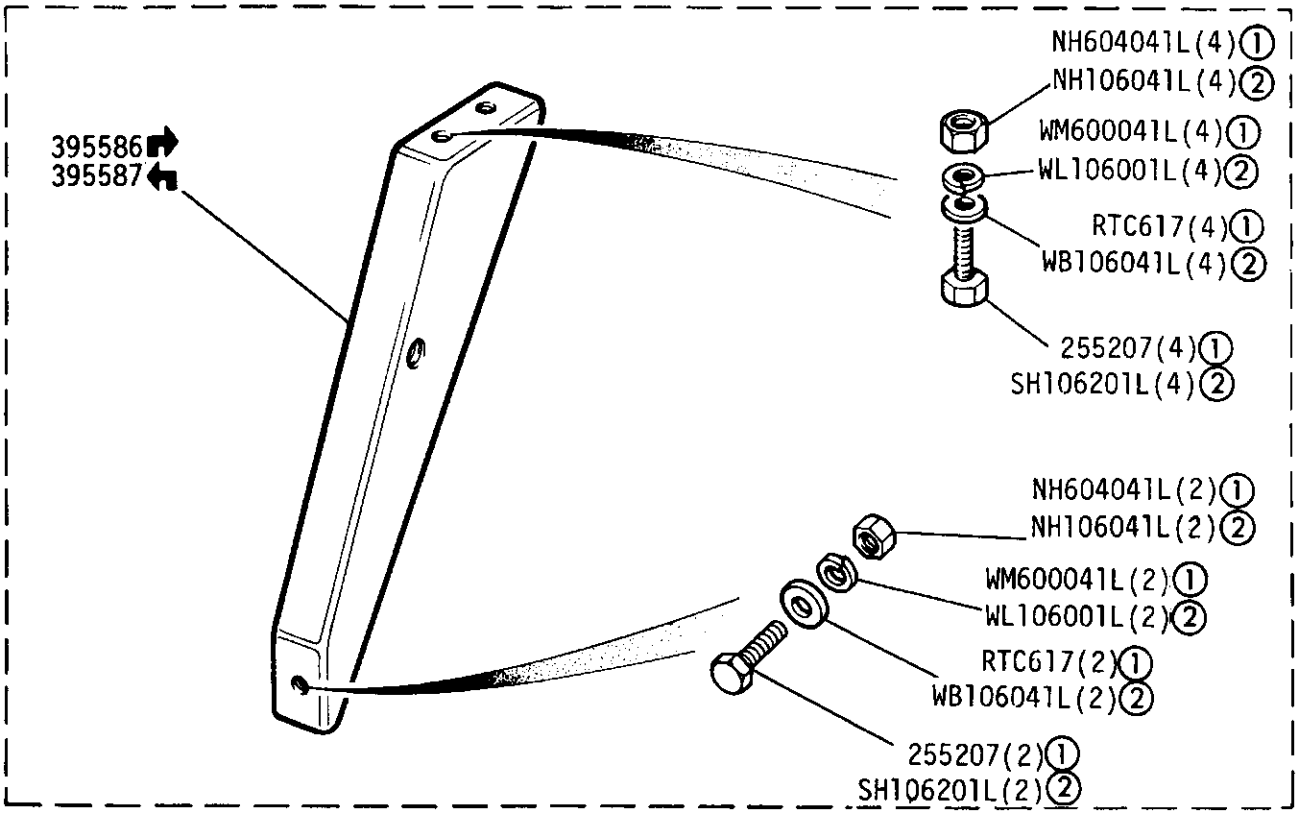

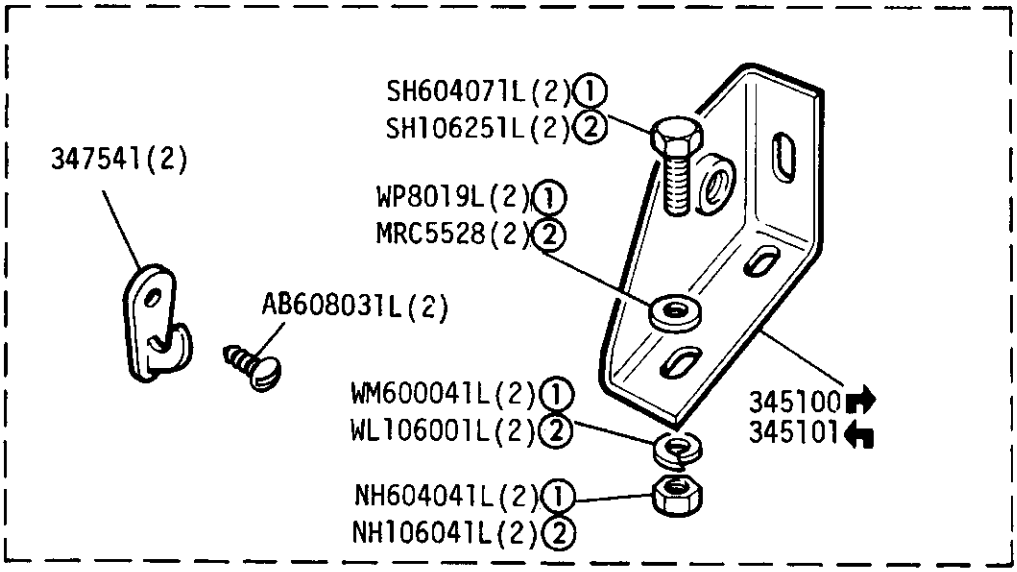

①UNF
②METRIC

GROUP M

BODY - Inertia Reel
Mounting Bracket

"County"

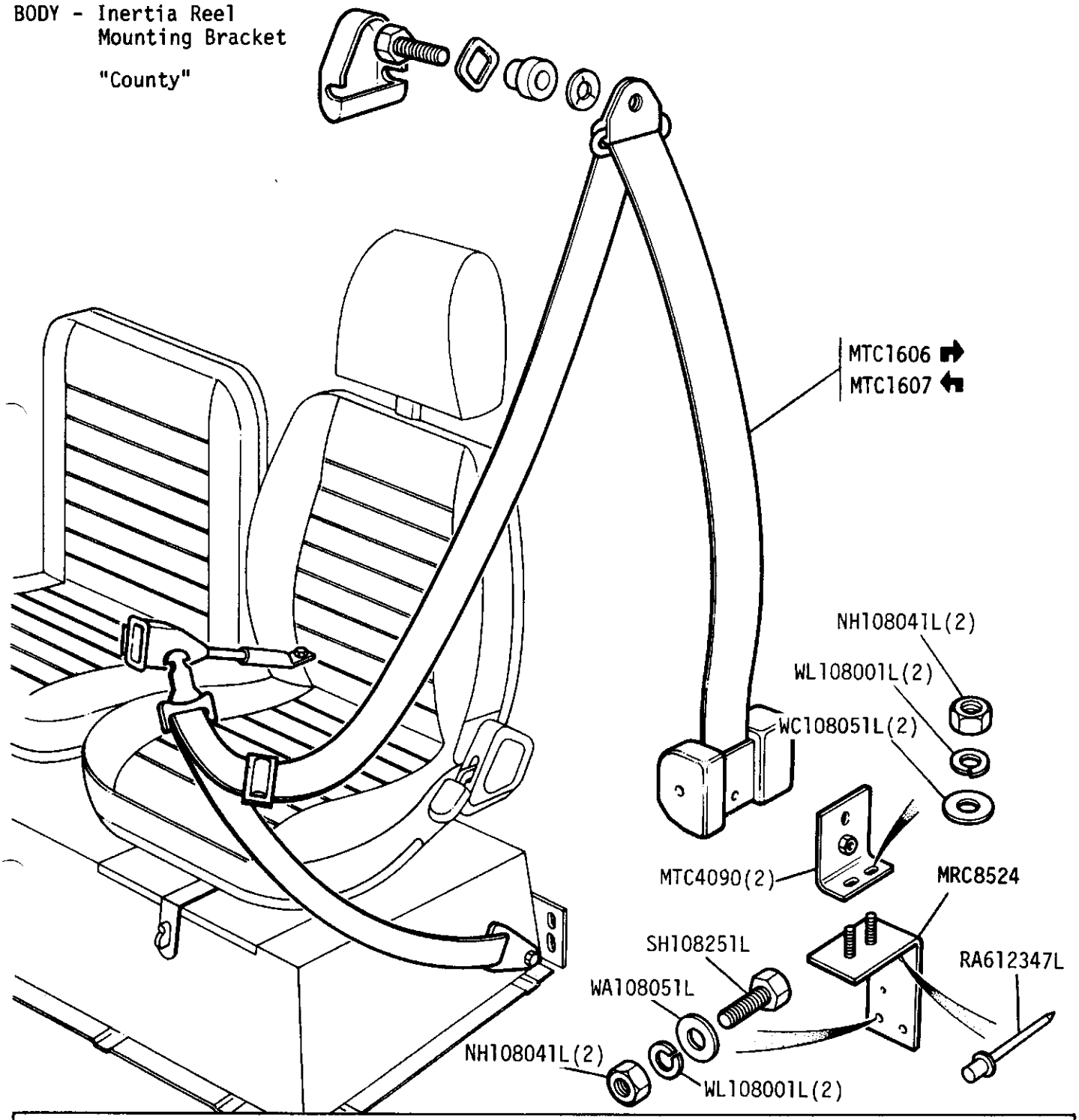

GROUP M

BODY - Squab - Centre Seat - 109 Station Wagon

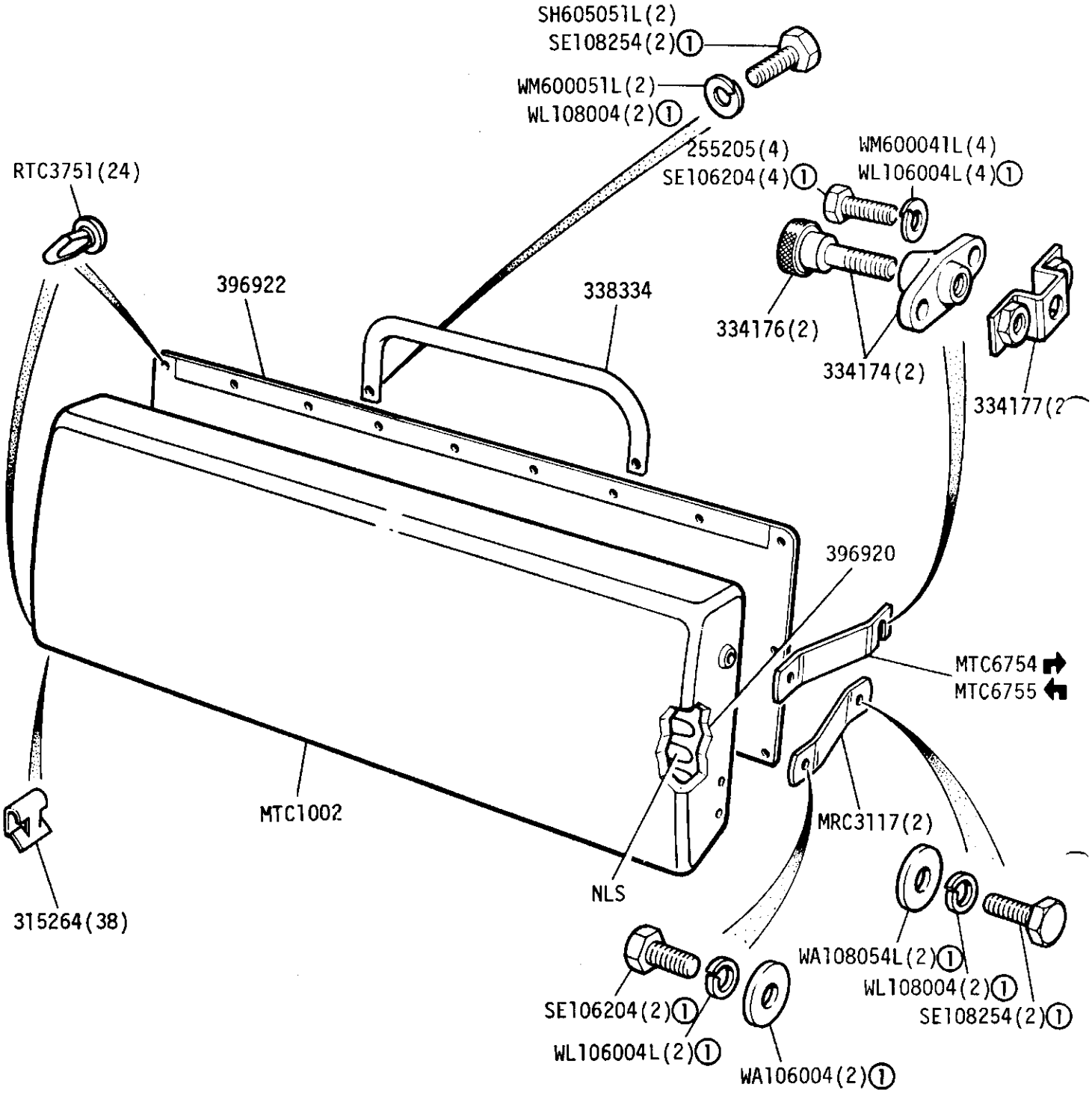

Centre seat complete assembly MRC3179

For United Kingdom, Germany and Italy From August 1977 onwards

① Black Finish

GROUP M
BODY - Squab - Centre Seat - 109 in Station Wagon

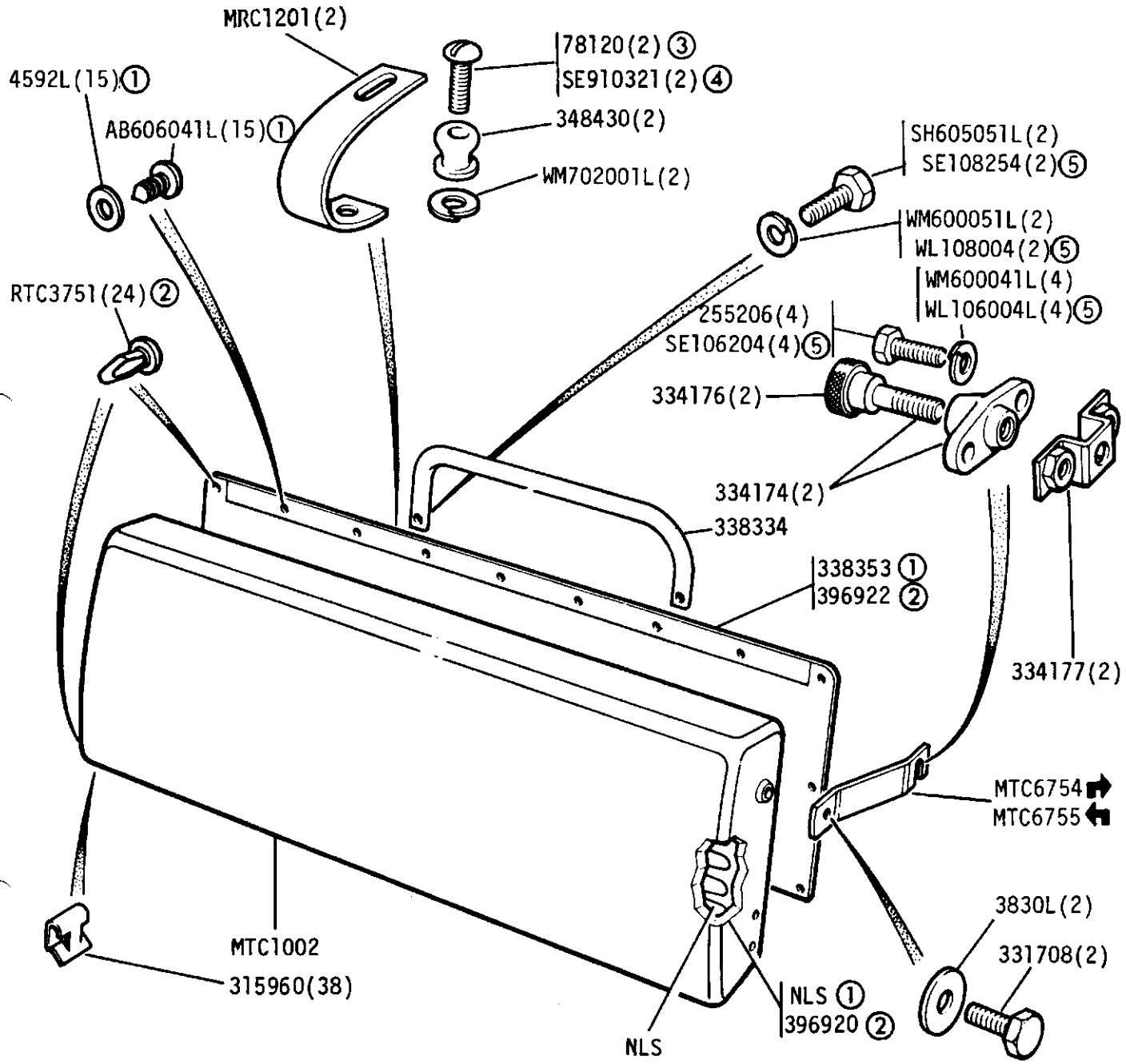

Centre seat complete assembly 396916
① Up to vehicle suffix 'B' inclusive
② From vehicle suffix 'C' onwards Up to July 1977
③ 2BA Fixing
④ 10UNF Fixing
Alternative Fixings
⑤ Black Finish

GROUP M
BODY - Cushion - Centre Seat - 109in Station Wagon

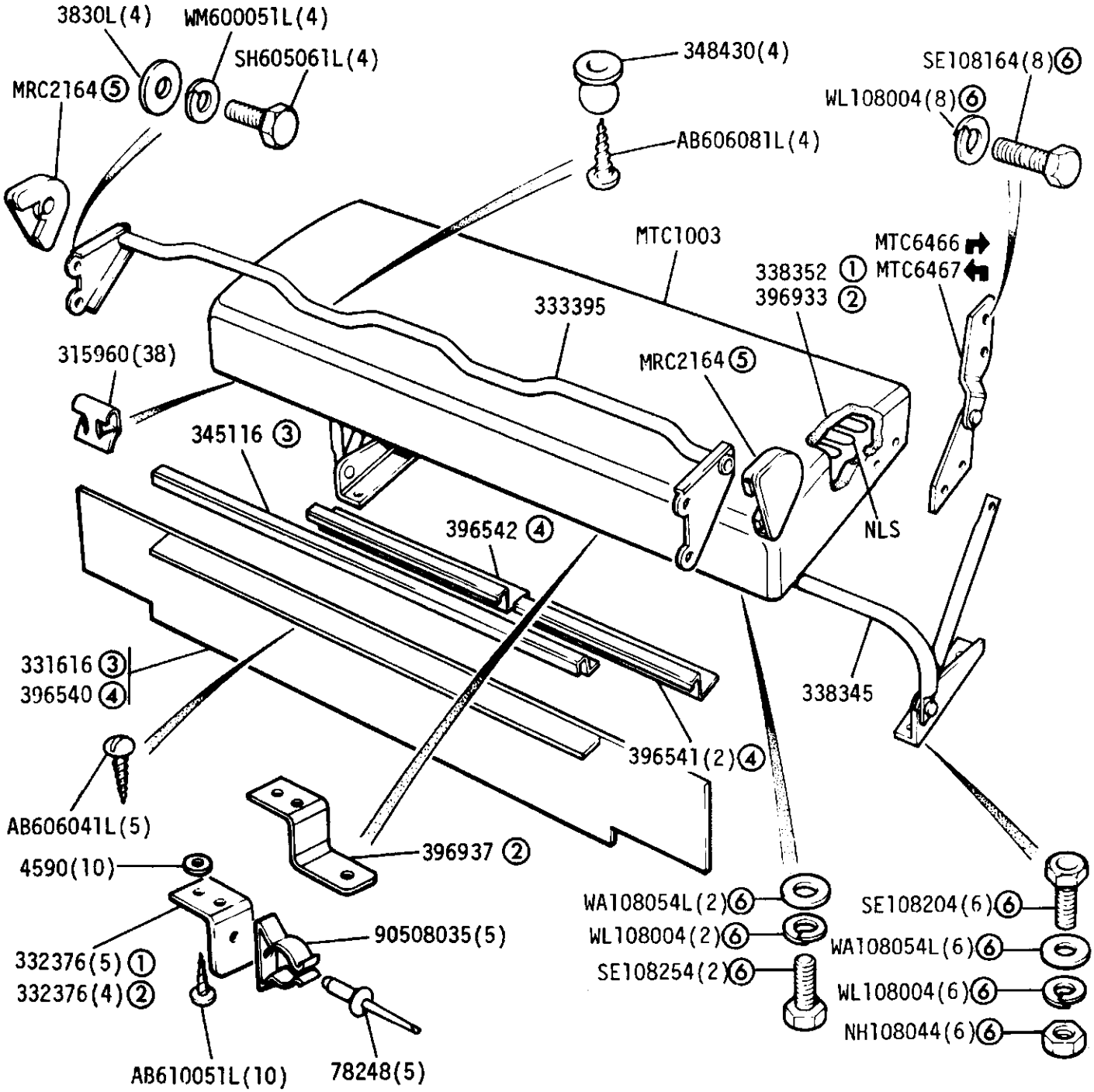

① Up to vehicle suffix 'B' inclusive
② From vehicle suffix 'C' onwards
③ Single piece trim retainer
④ Three piece trim retainer
⑤ France and Sweden
⑥ Black Finish

GROUP M
BODY - Squab - Centre Seat - 109 Station Wagon "County"

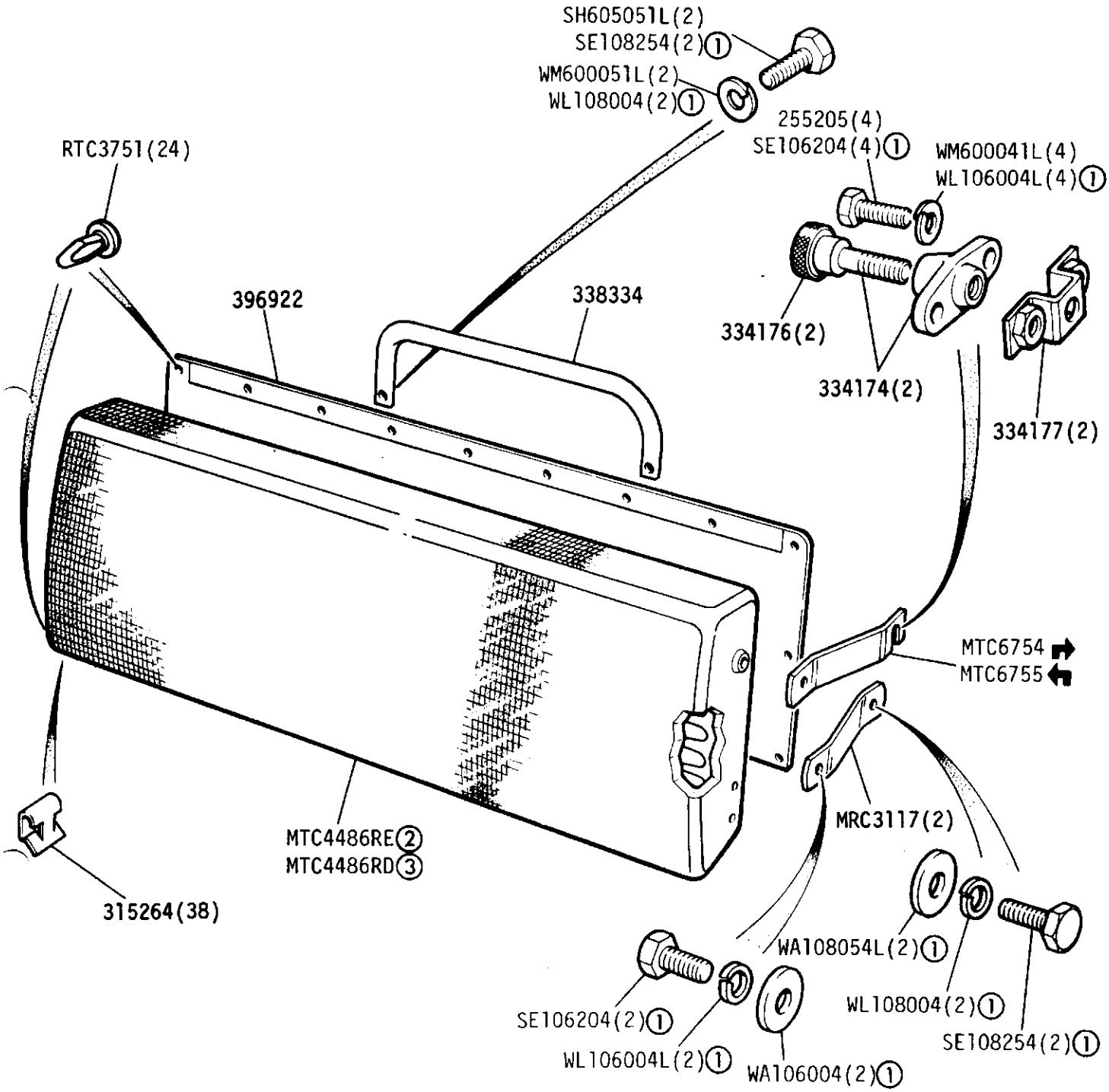

①Black Finish
②Black/Grey Cloth
③Brushwood/Berber Cloth

GROUP M
BODY - Cushion - Centre Seat - 109" Station Wagon"County"

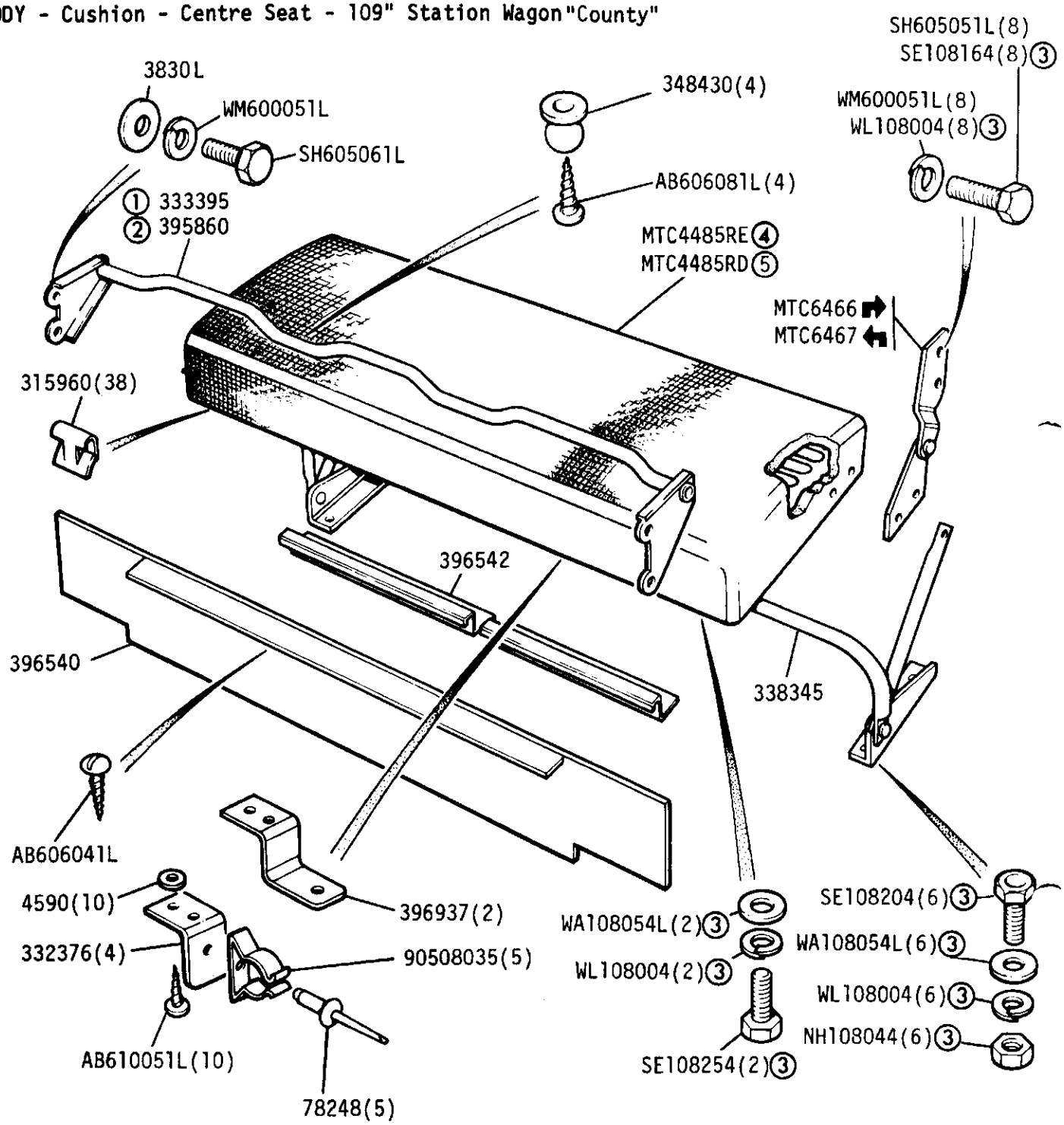

① Grab rail - Shaped
② Grab rail - Straight
Sleeve for Straight Rail 396423
③ Black Finish
④ Black/Grey Cloth
⑤ Brushwood/Berber Cloth

GROUP M

ODY - Centre front seat and grab rail 109in twelve seater

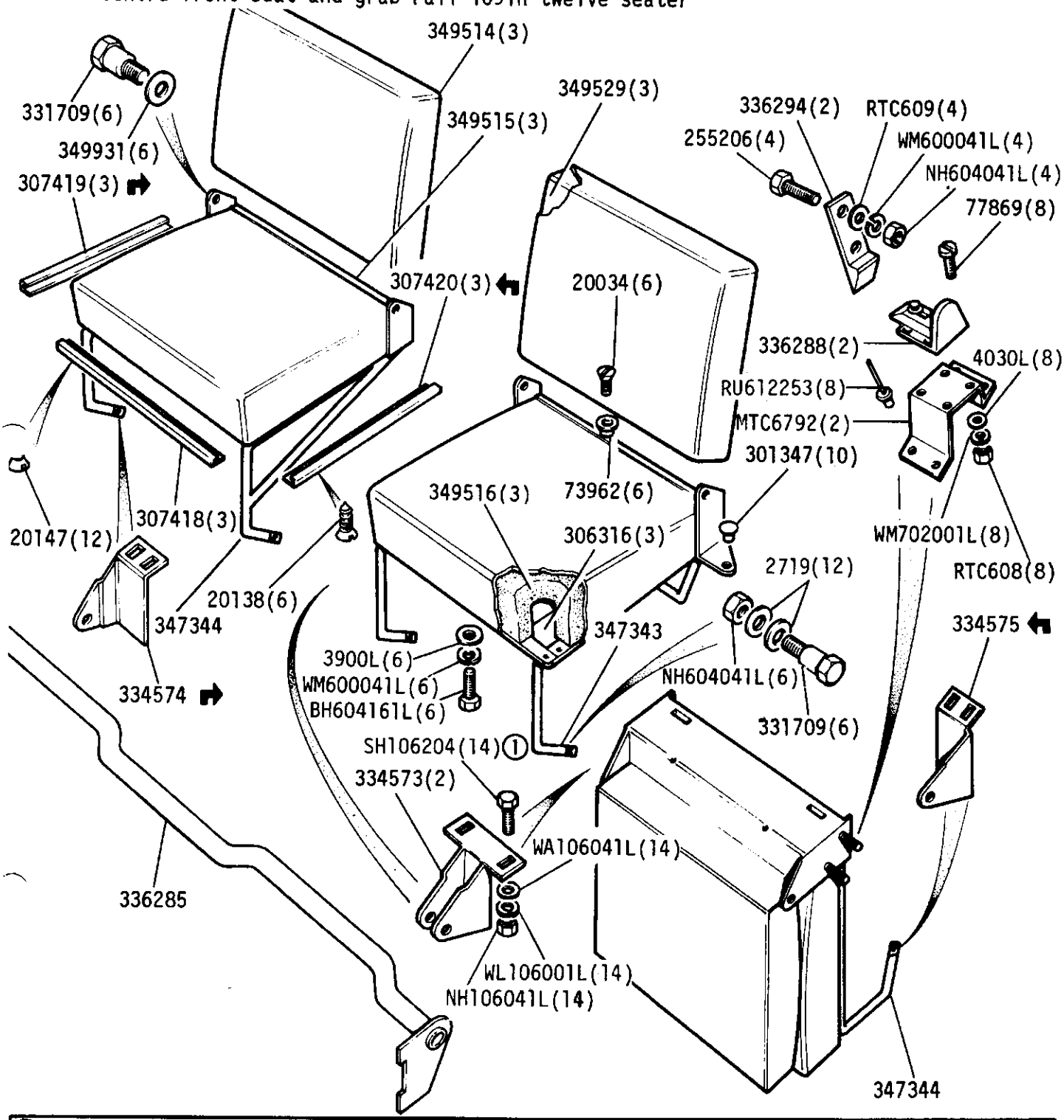

①Black Finish

GROUP M
BODY - Centre front seat and grab rail 109in twelve seater "County"

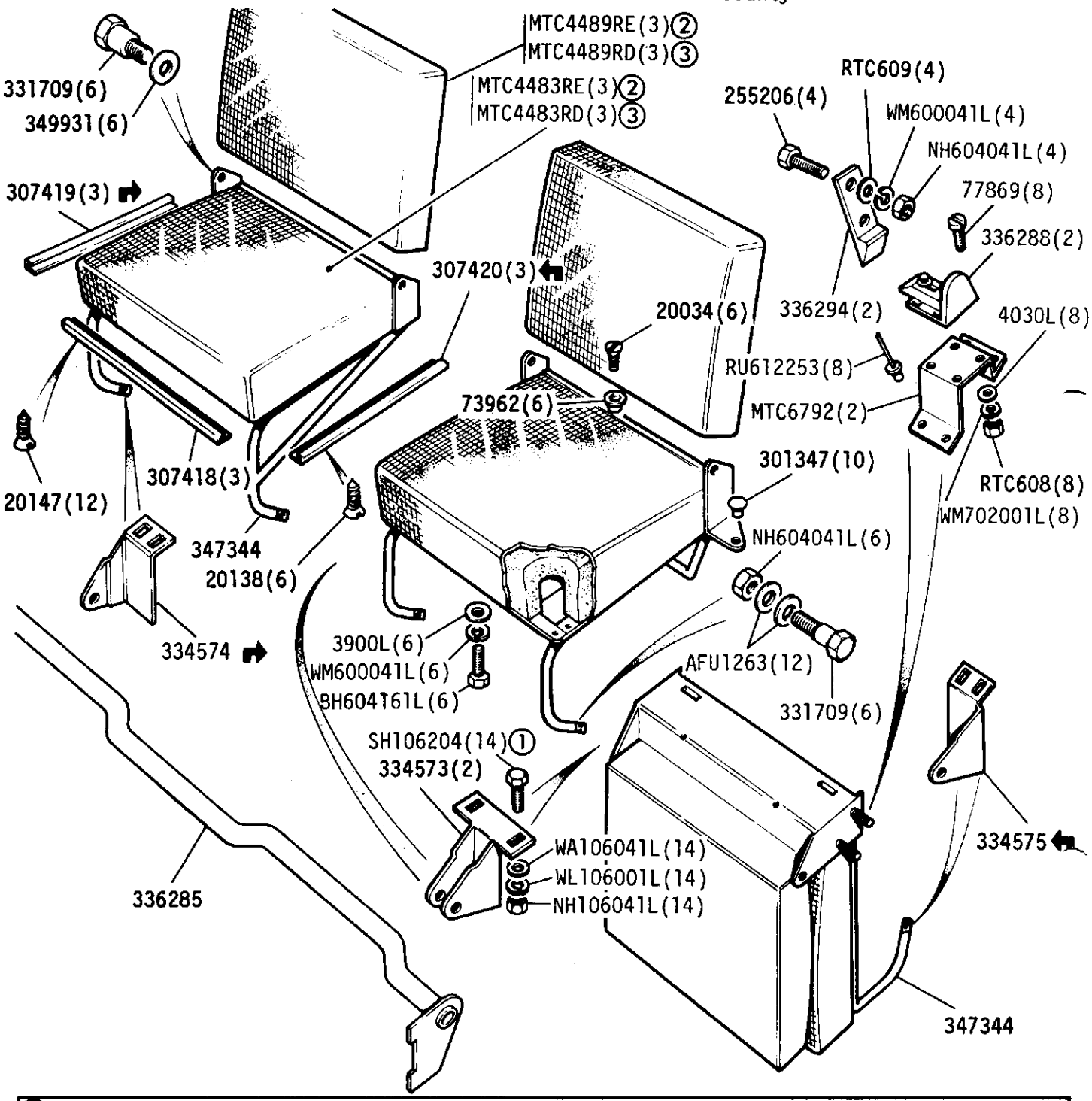

①Black Finish
②Black/Grey Cloth
③Brushwood/Berber Cloth

GROUP M
BODY - Seat Locking - ECE17 type

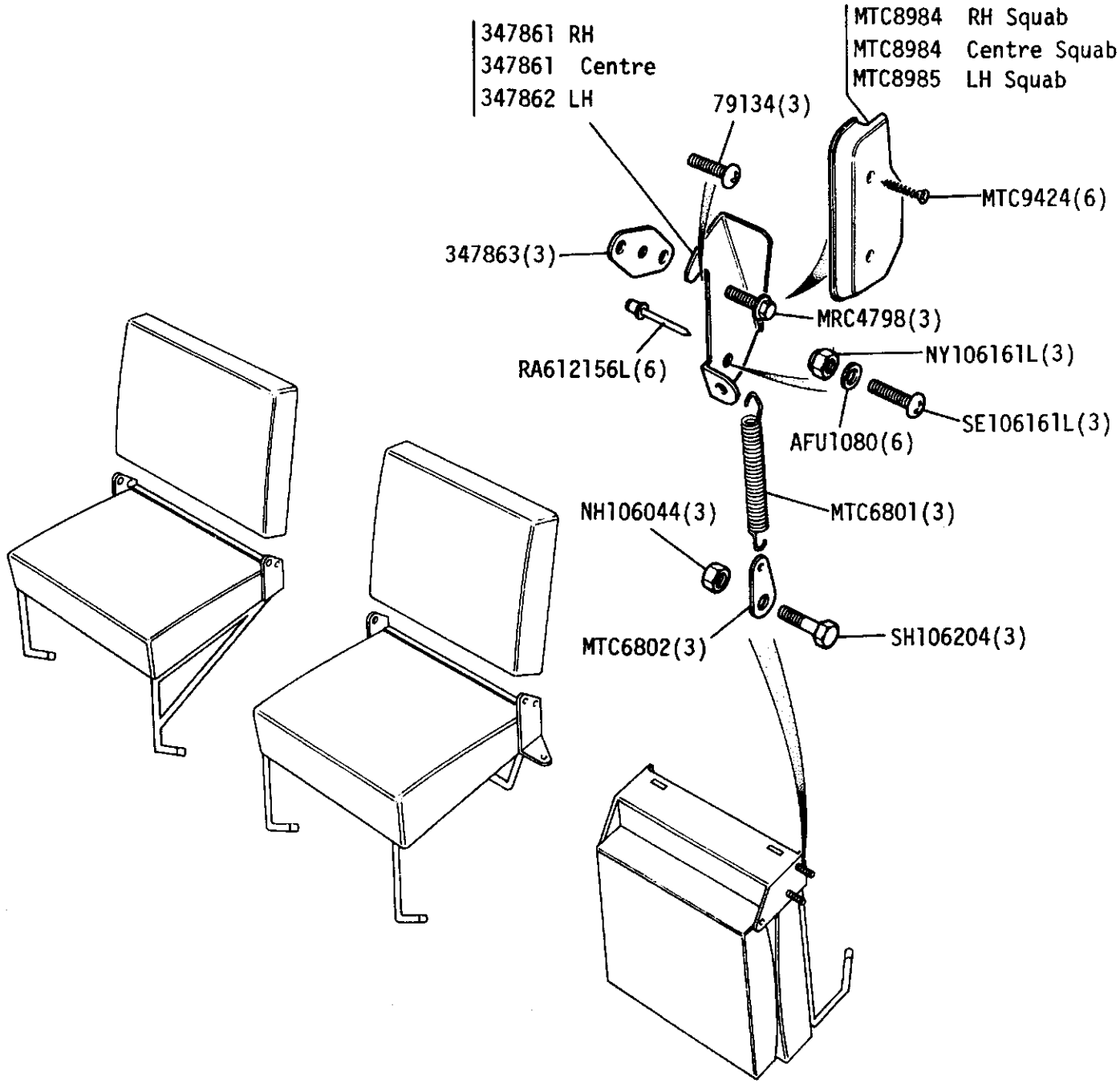

GROUP M

BODY - Rear Seats - 88in Station Wagon

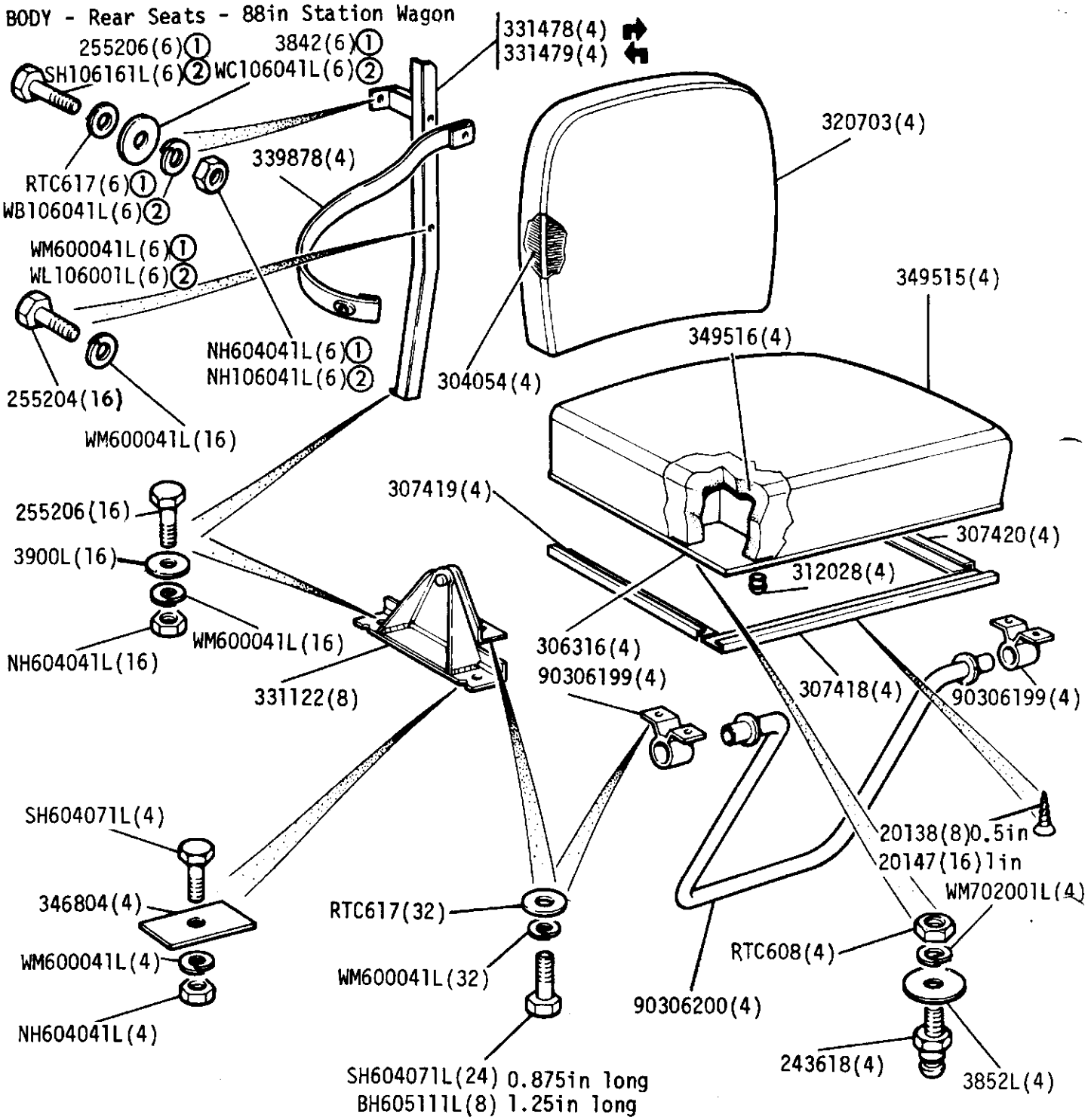

①UNF
②METRIC

GROUP M
BODY - Rear Seats - 88in Station Wagon "County"

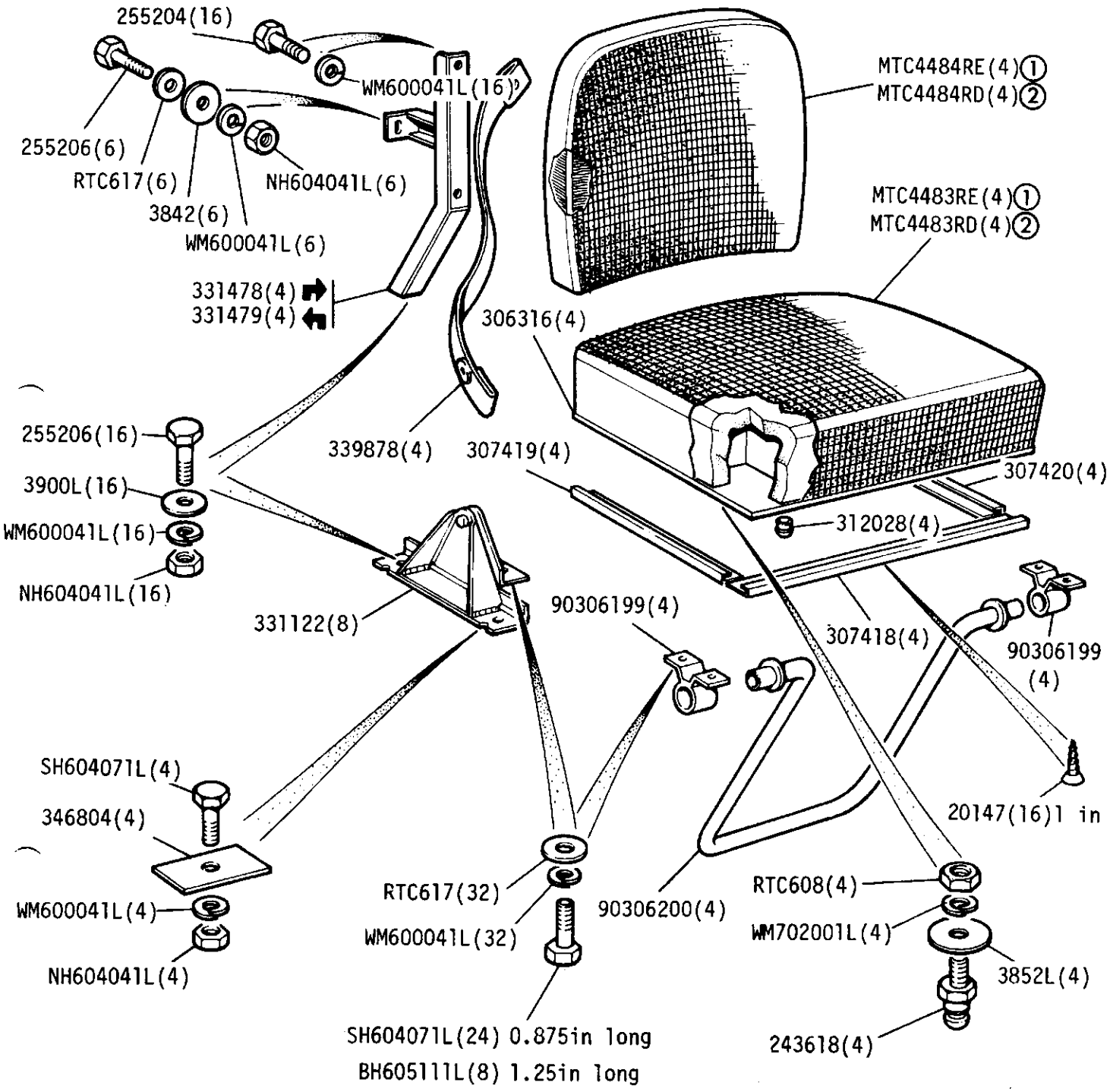

①Black/Grey Cloth
②Brushwood/Berber Cloth

GROUP M
BODY - Rear Seat - 109in Station Wagon

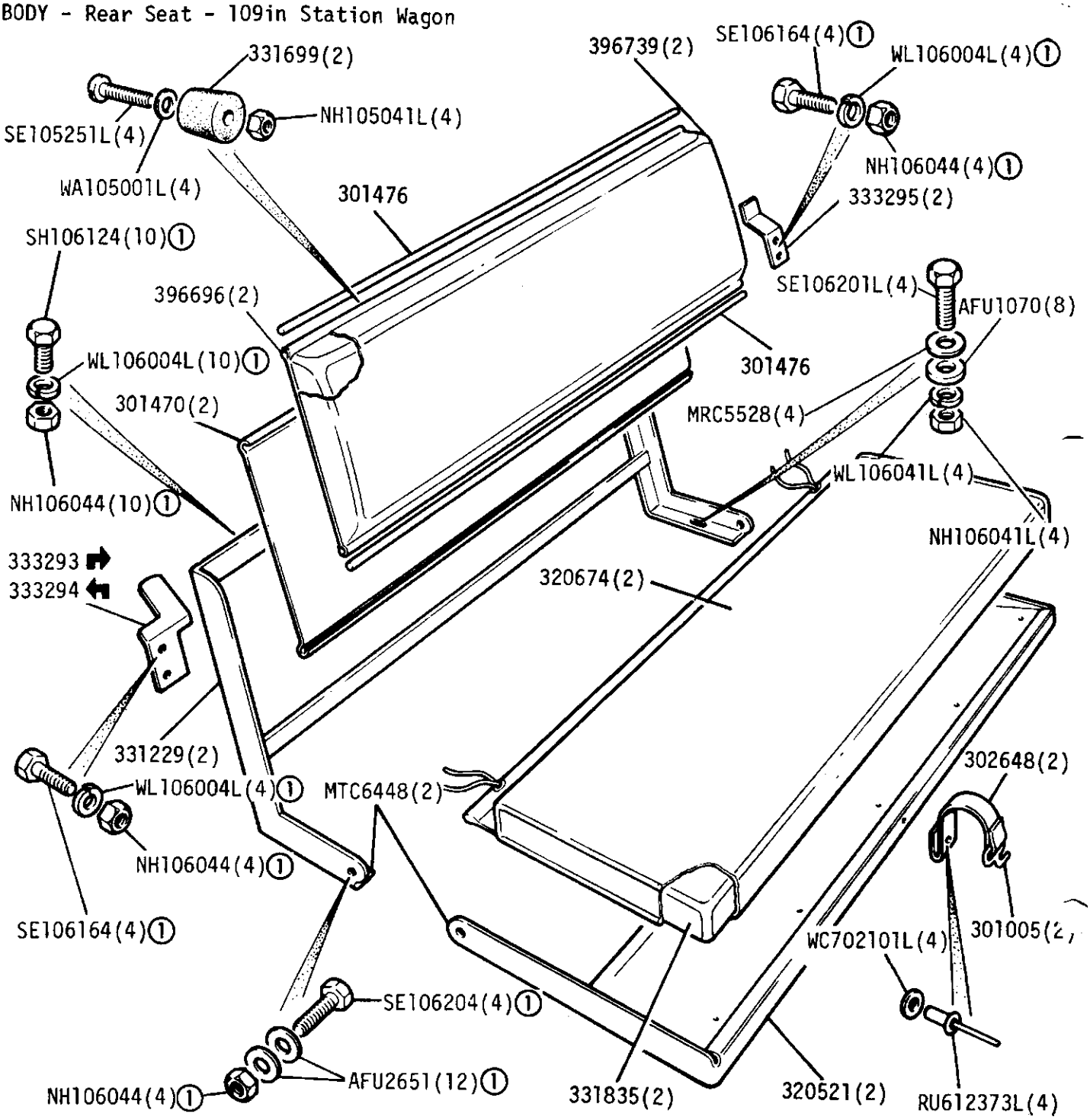

①Black Finish

GROUP M

BODY - Rear Seat - 109" Station Wagon "County"

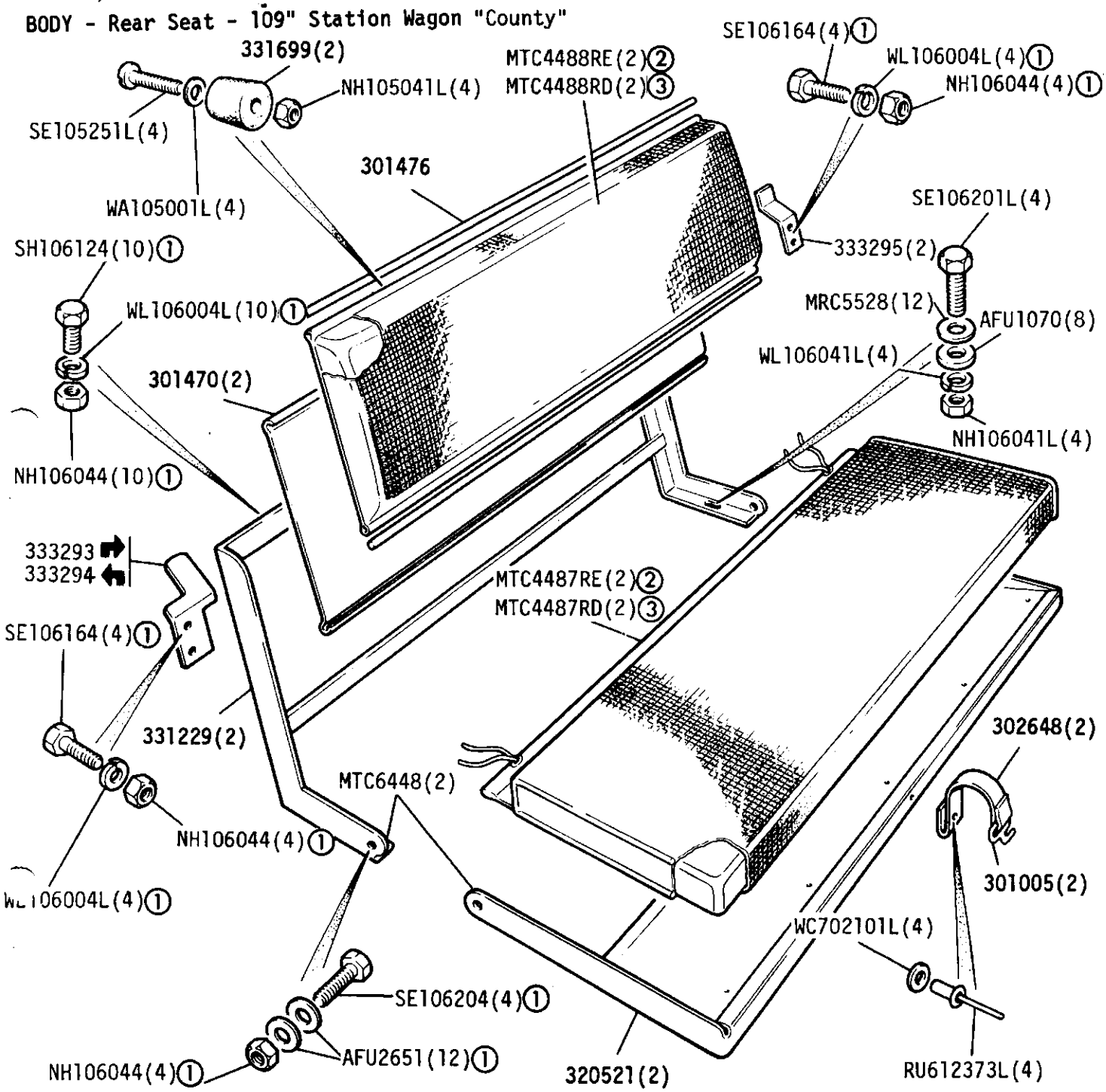

①Black Finish
②Black/Grey Cloth
③Brushwood/Berber Cloth

GROUP M
BODY - Rear seats - 109in twelve seater

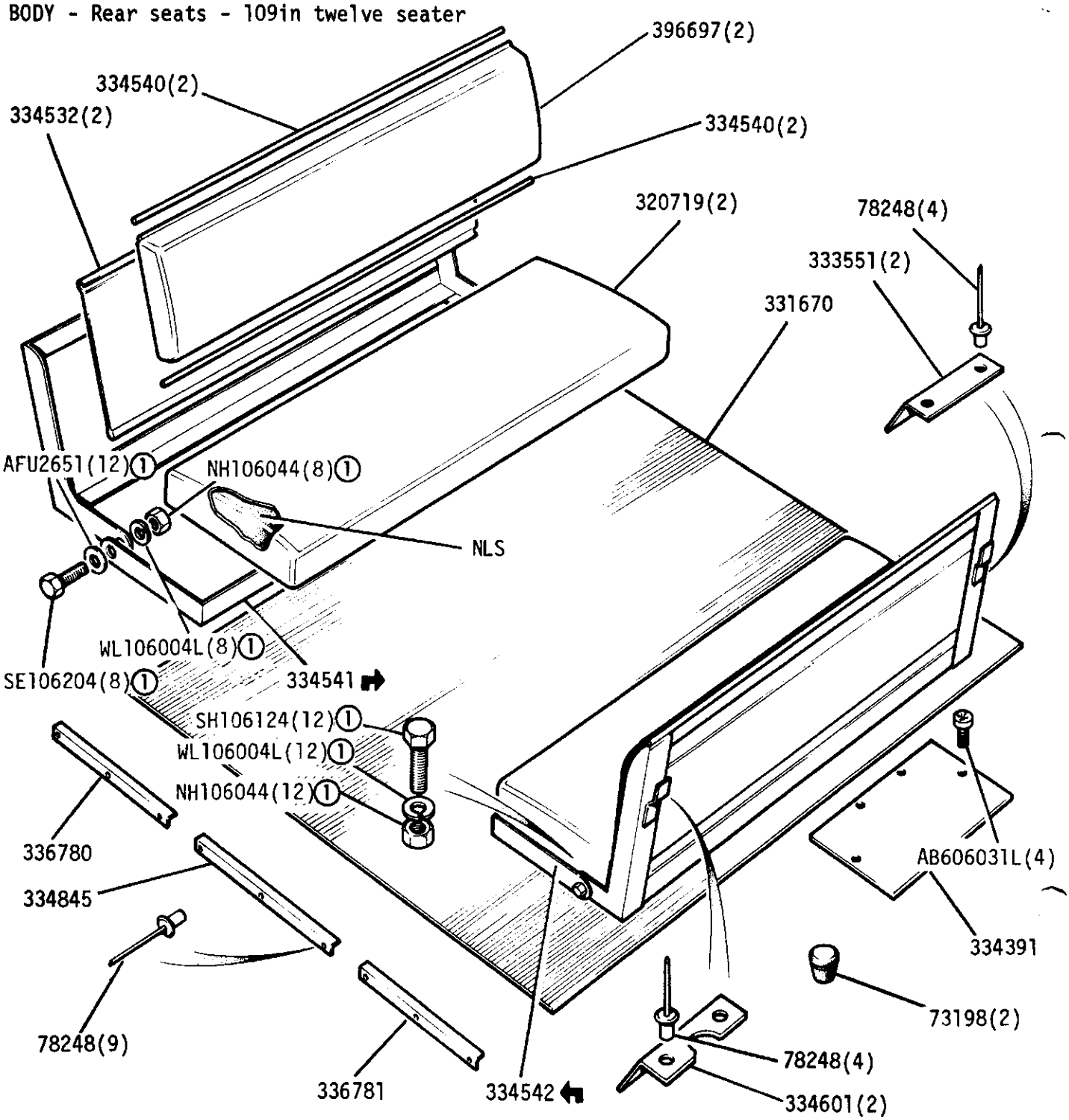

Rear seat backrest assembly 396698(2)
①Black Finish

GROUP M
BODY - Rear Seat - 109" 12 Seater Station Wagon "County"

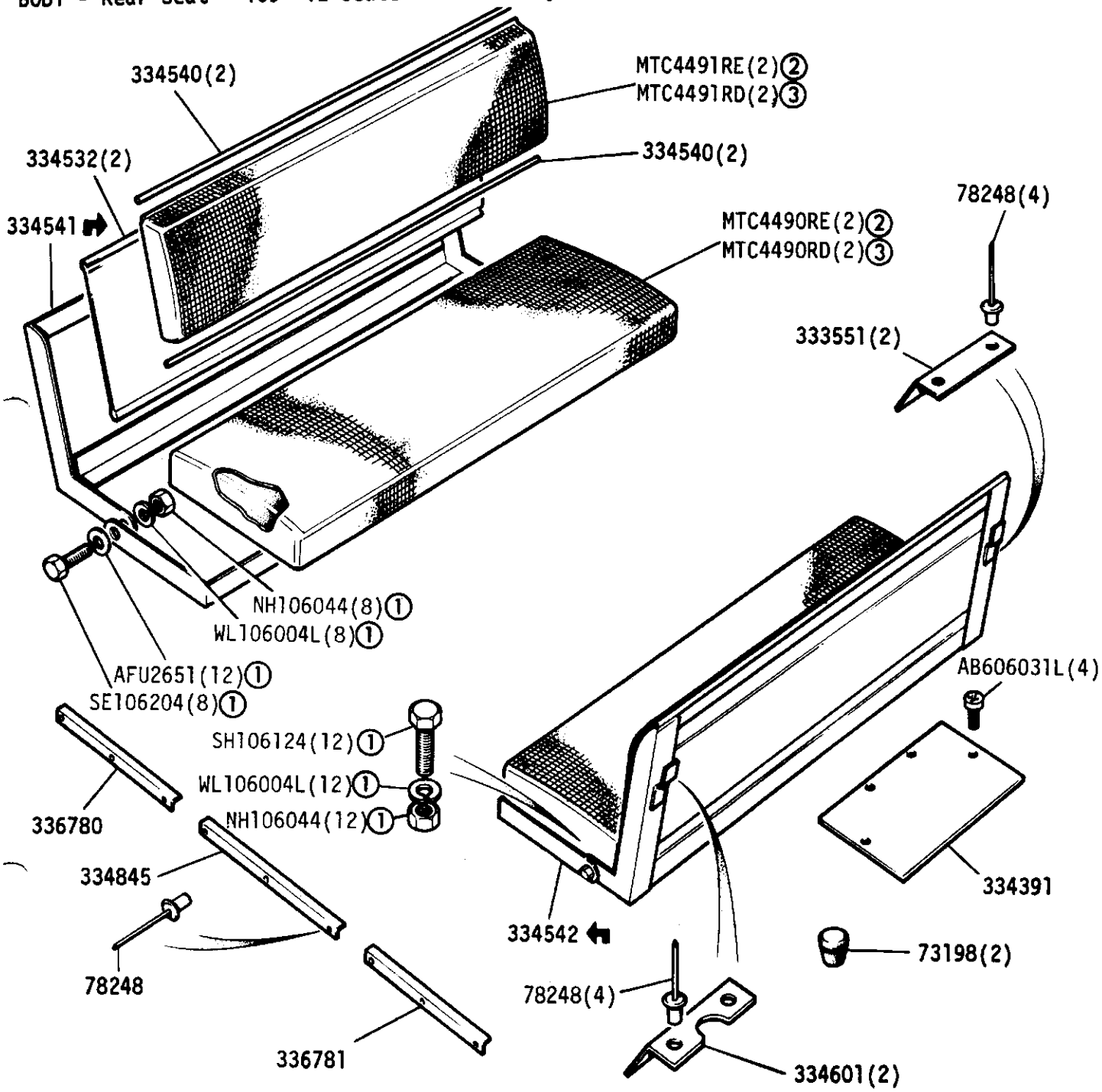

①Black Finish
②Black/Grey Cloth
③Brushwood/Berber Cloth

GROUP M

Truck Cab Trim - 'County'

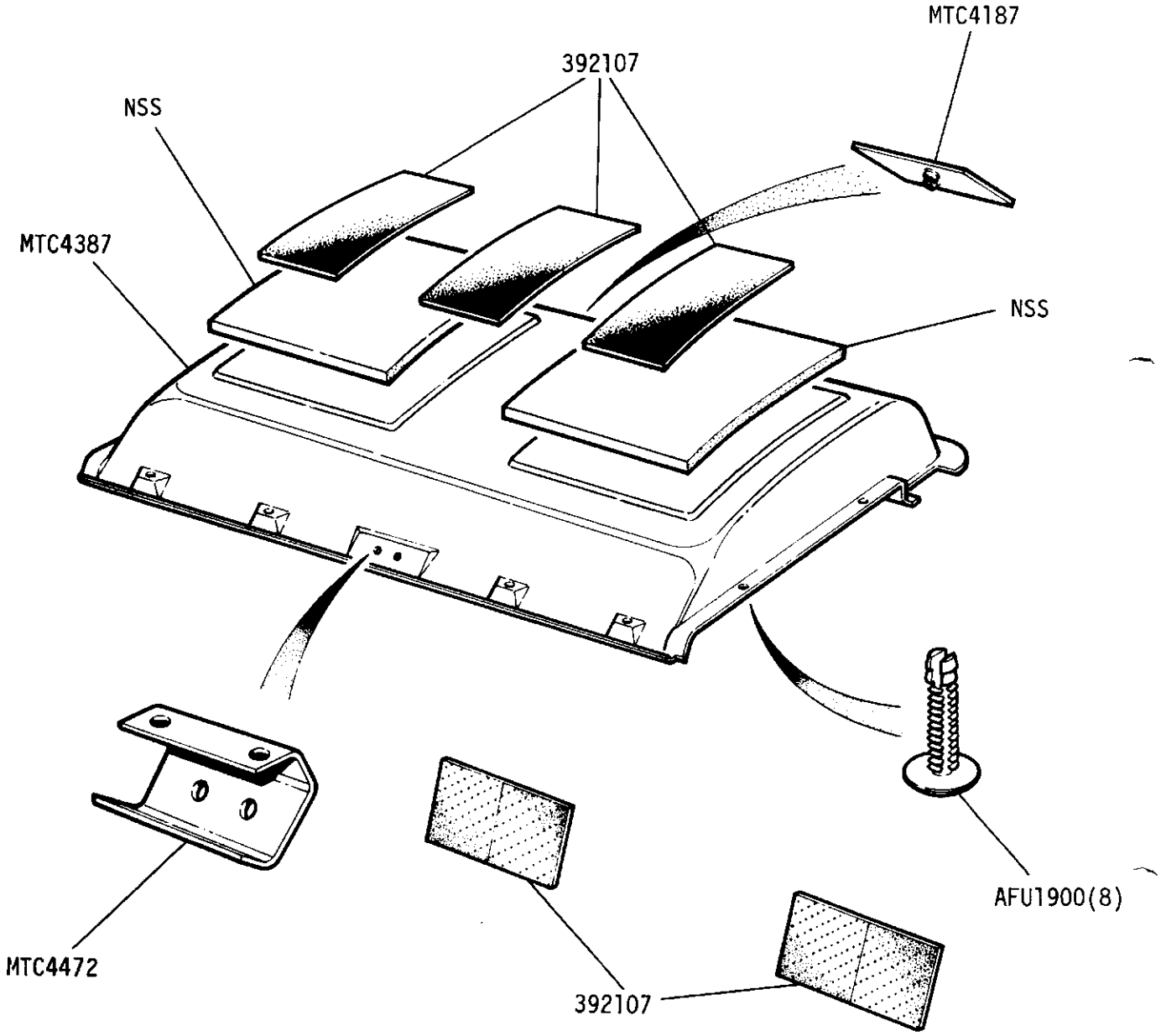

GROUP M

BODY - Bodyside Tape and Badge "County"

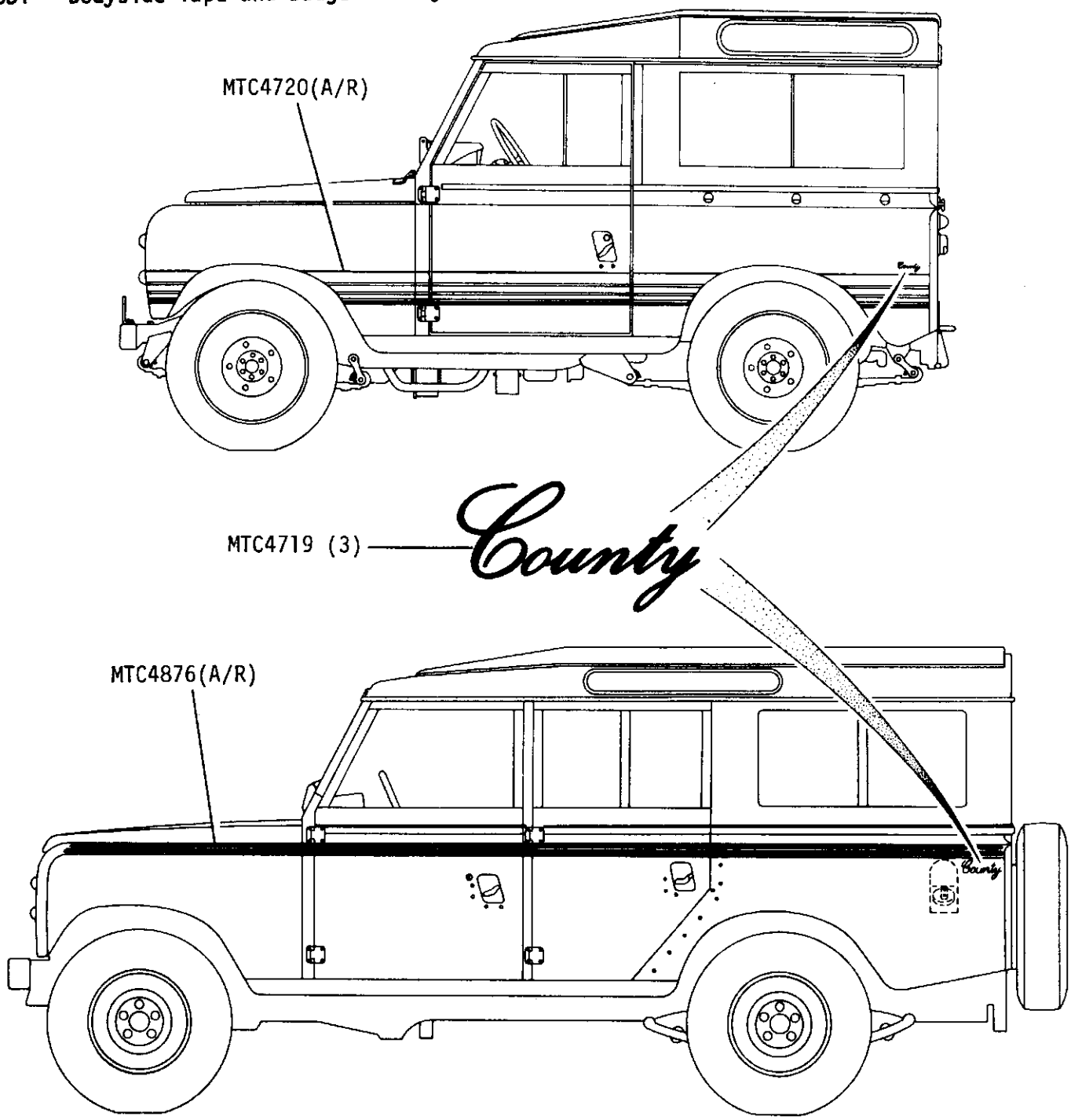

GROUP N
OPTIONAL EQUIPMENT - Towing Hook and Attachment Plate H.C.P.U.

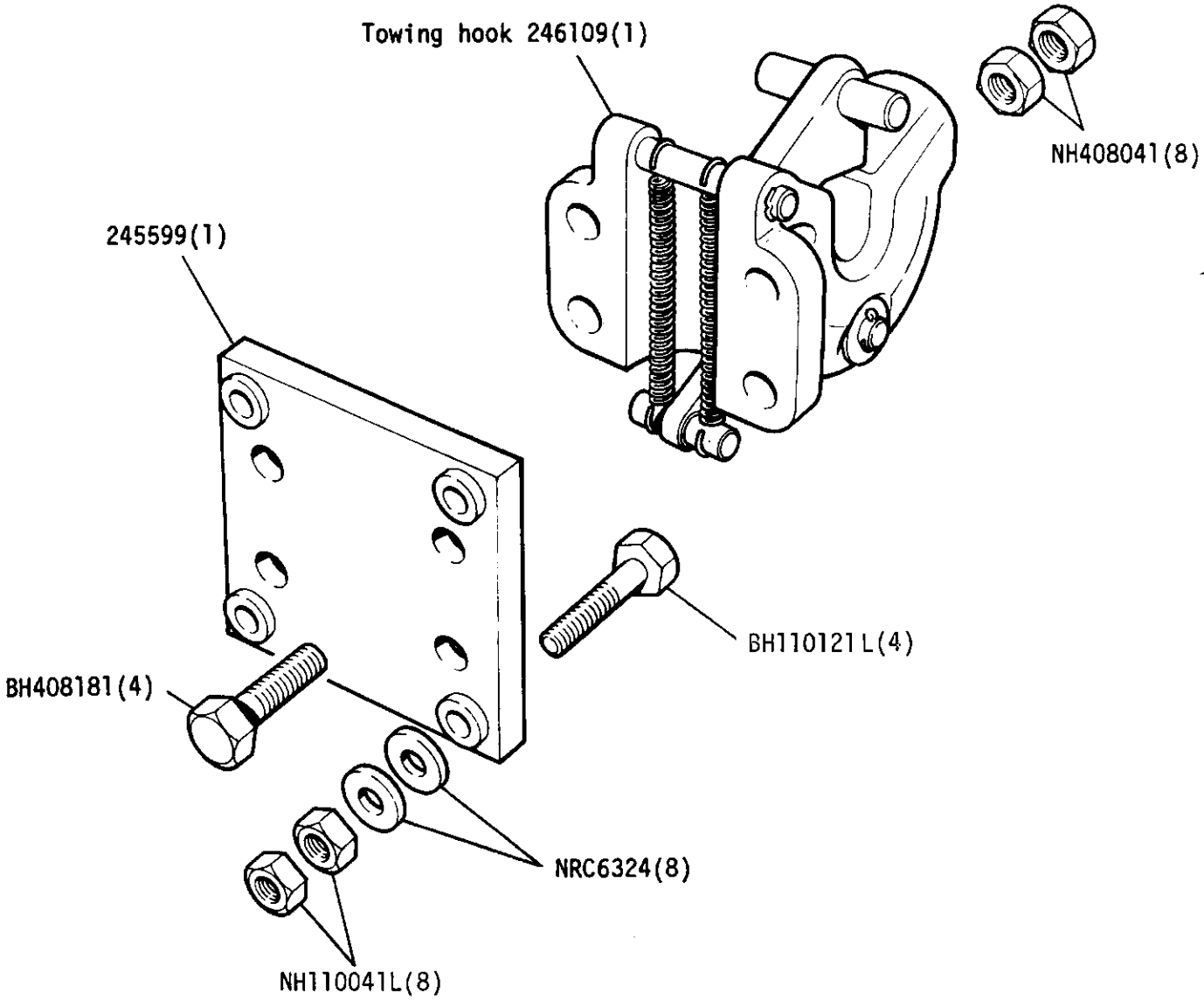

GROUP N
OPTIONAL EQUIPMENT - Rotating - Towing hook H.C.P.U.

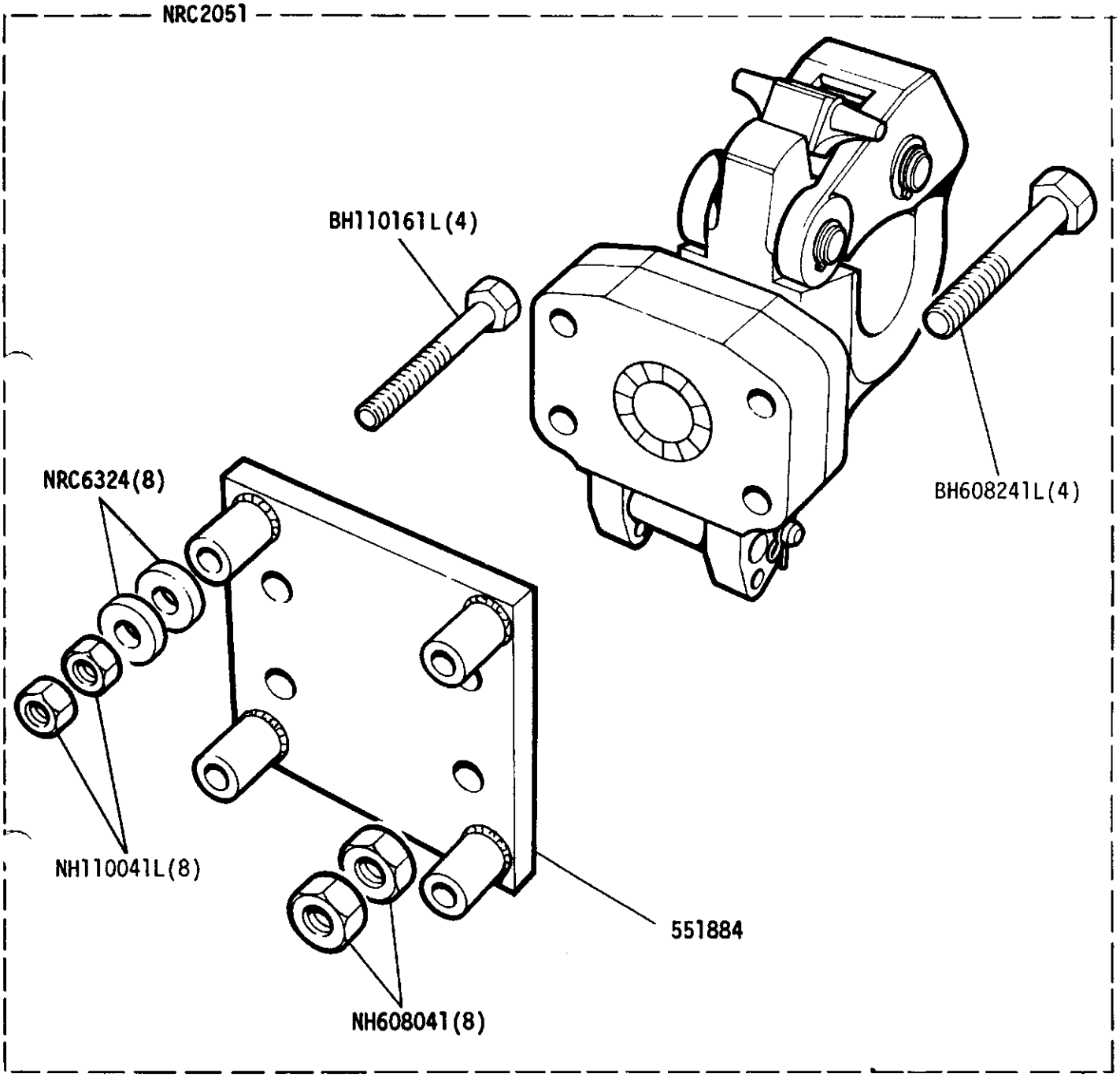

Land Rover 2¼L & V8 stage 1

GROUP N
OPTIONAL EQUIPMENT - Towing Jaw and Pintle
H.C.P.U.

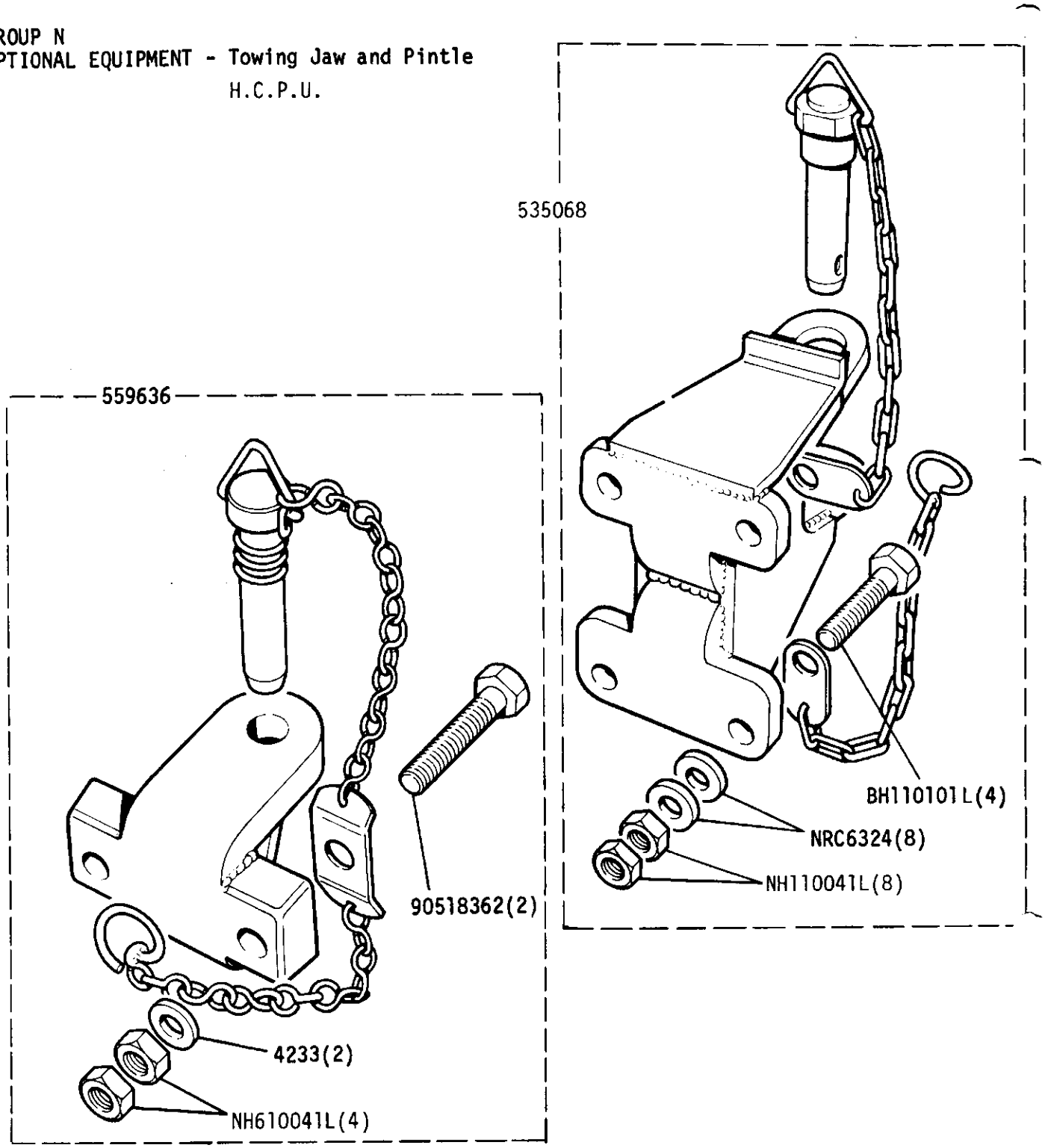

GROUP N

OPTIONAL EQUIPMENT - Towing Extension Bracket H.C.P.U.

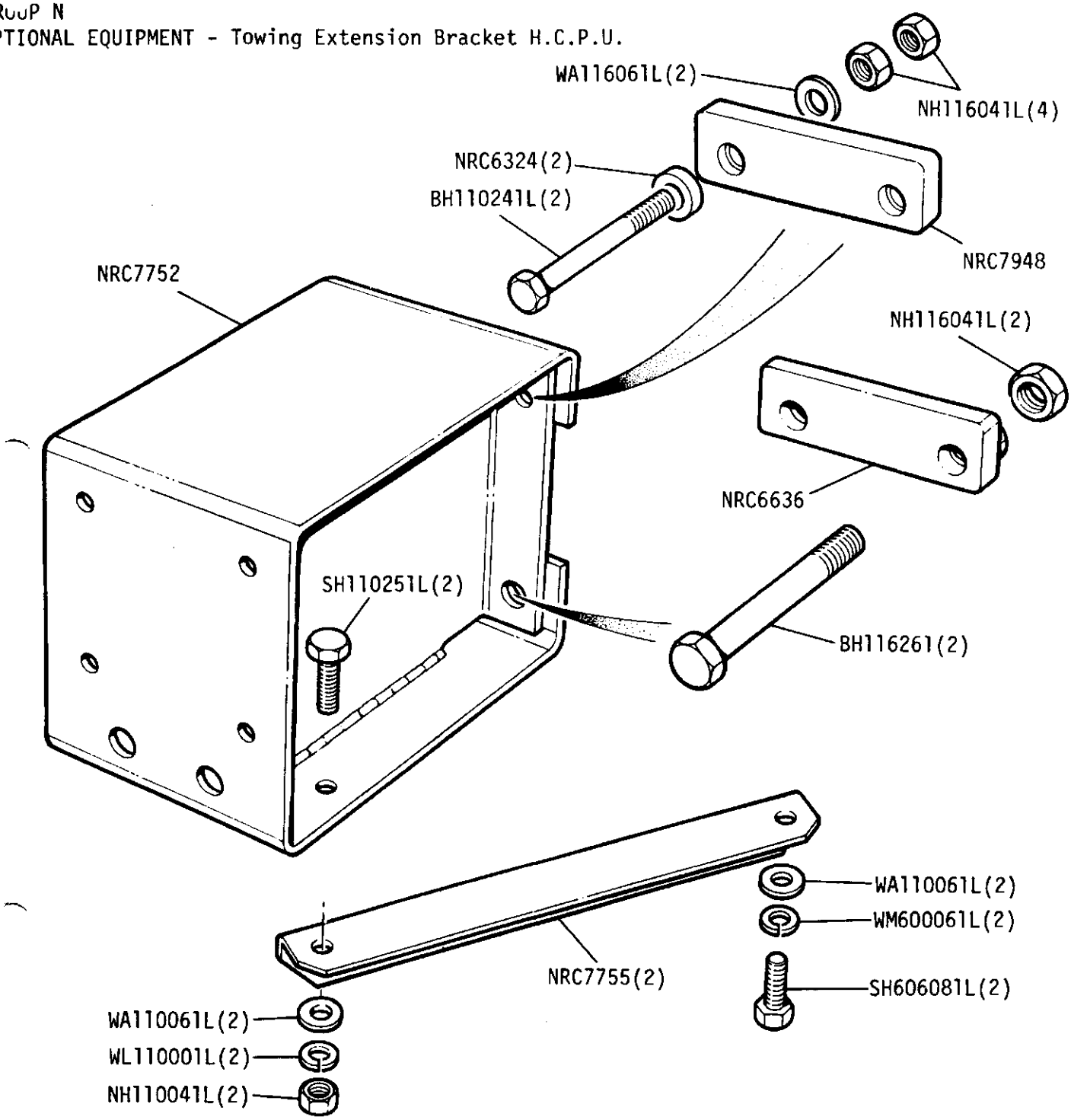

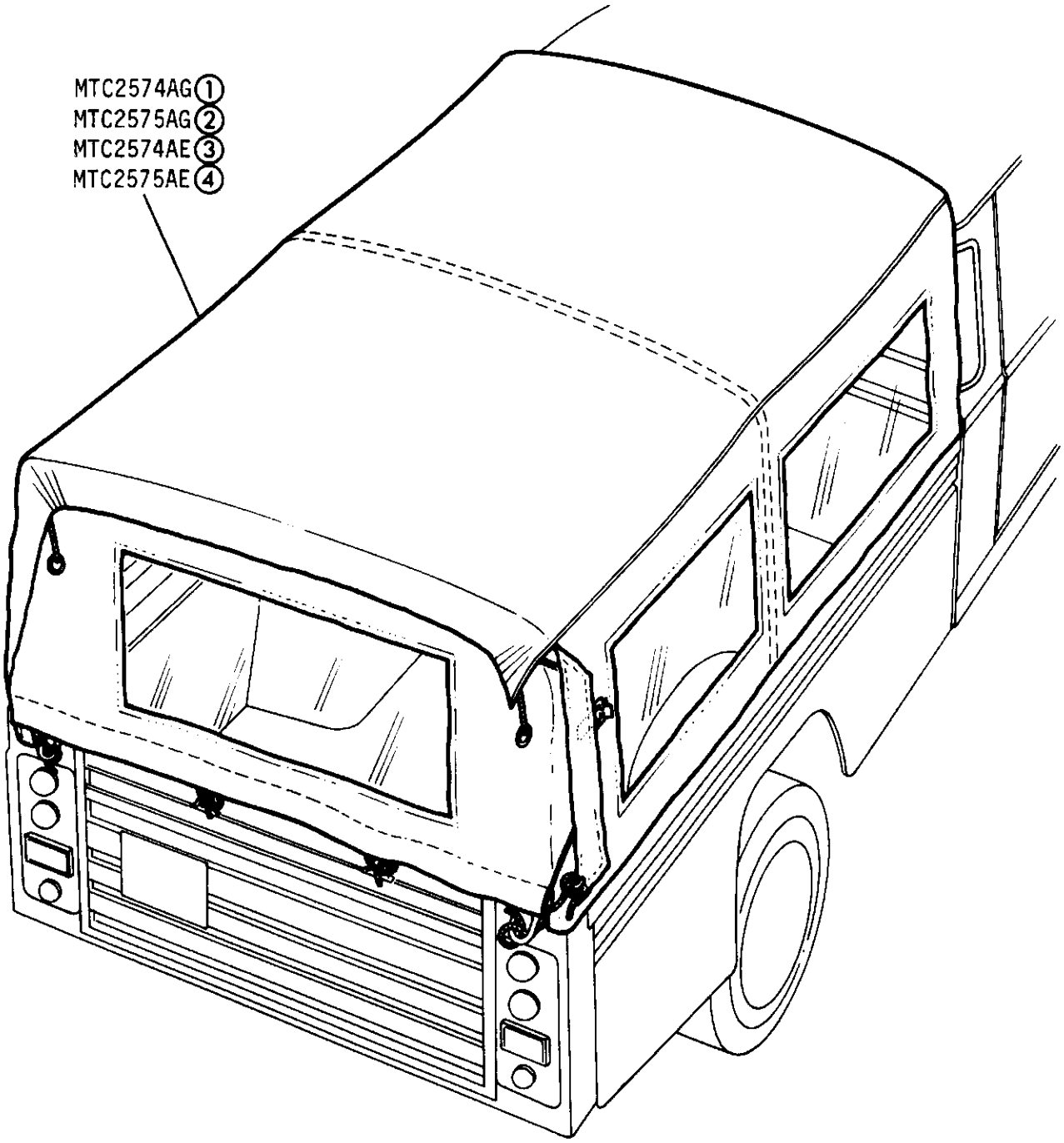

①Green, plain sides.
②Green, with side windows.
③Matt Sand, plain sides.
④Matt Sand, with side windows.

GROUP N
OPTIONAL EQUIPMENT - Hood Sticks H.C.P.U.

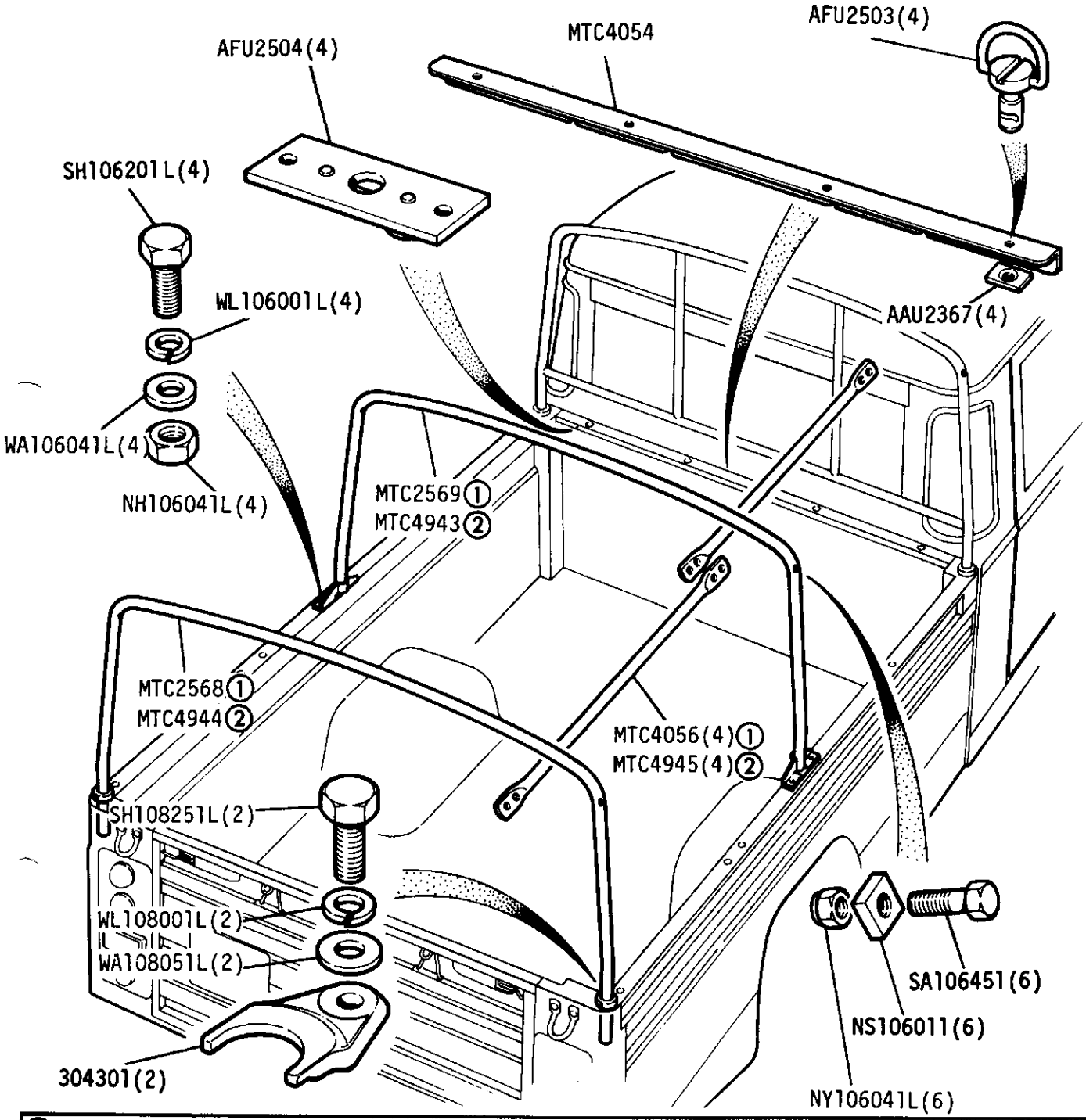

①Black Finish
②Galvanised Finish

GROUP N
OPTIONAL EQUIPMENT - Console Unit.

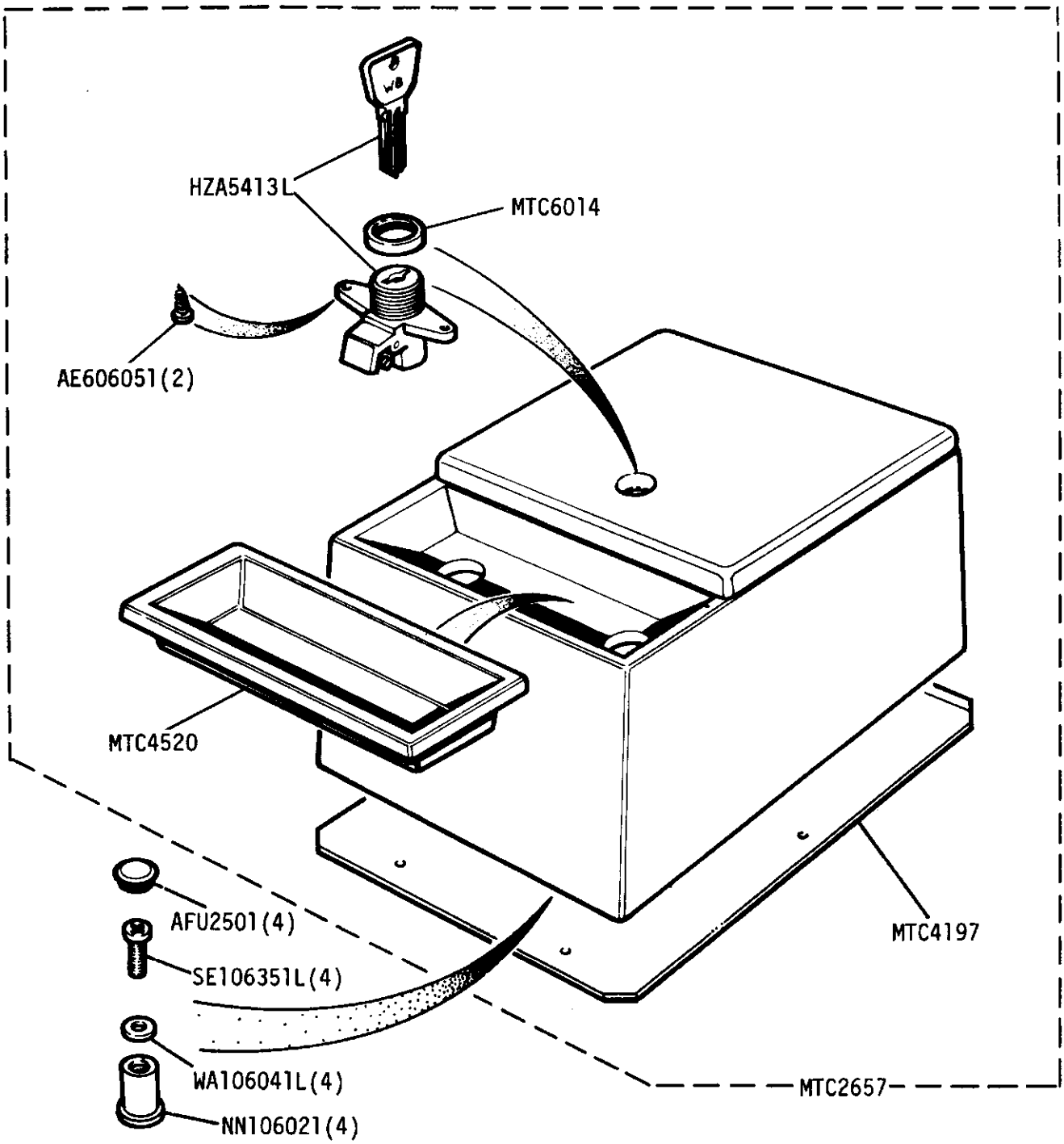

Washer Plate - MTC4601(4)

GROUP N
OPTIONAL EQUIPMENT - Tool Locker H.C.P.U.

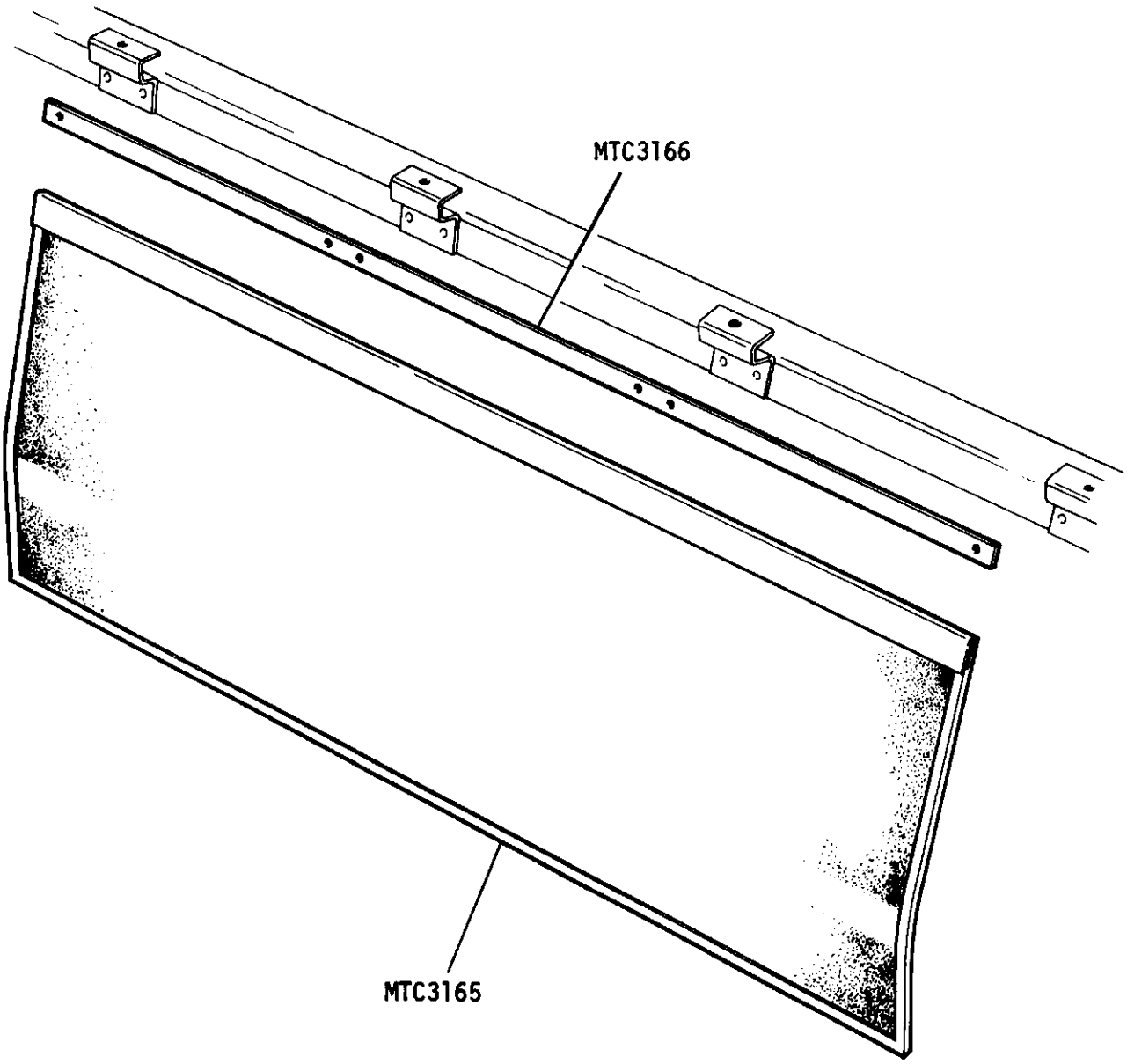

PLATE REF. 1 2 3 4	DESCRIPTION	QTY.	PART No.	REMARKS
	Cotton webbing, 1/32" x 1" khaki-green	As reqd	91878	
	Cotton webbing, 5/64" x 1" black	As reqd	92088	
	Grey felt	As reqd	91414	
	Leather cloth, black, 50" wide	As reqd	92616	
	Leather cloth, oatmeal, 50" wide	As reqd	92462	
	White leather cloth, 50" wide	As reqd	91950	
	Sealing strip, 'Prestik', ½ x 1/16"	As reqd	13296	
	Cleaning fluid for wheel cylinder and master cylinder parts, ½-pint tin	As reqd	AAU1582	
	'Hylomar", sealing compound, 4 oz. tube	As reqd	RTC3347	
	'Bar Seal' sealing pellet for radiator	1	601314	
	RTV/Hylosil sealing compound, 100cc tube	As reqd	RTC3254	

* ASTERISK INDICATES A NEW PART WHICH HAS NOT BEEN USED ON ANY PREVIOUS MODEL

PLATE REF. 1 2 3 4	DESCRIPTION	QTY.	PART No.	REMARKS
	Engine overhaul gasket kit	1	608124	2¼ litre Petrol models
	Engine overhaul gasket kit	1	605106	2.6 litre Petrol
	Engine overhaul gasket kit	1	525520	2¼ Litre Diesel
	Gasket set, decarbonising	1	RTC3335	2¼ litre Petrol model
	Gasket set, decarbonising	1	RTC3333	2.6 litre Petrol
	Gasket set, decarbonising	1	RTC3336	2¼ litre Diesel
	Gearbox gasket kit	1	600603	
	Brake wheel cylinder overhaul kit, front	1	275744	88
	Brake wheel cylinder overhaul kit, front	1	266684	109 4 cylinder models
	Brake wheel cylinder overhaul kit, front	1	600210	109 6 cylinder models
	Brake wheel cylinder overhaul kit, rear	1	266687	88
	Brake wheel cylinder overhaul kit, rear	1	275744	109
	Brake adjuster kit (Axle set)	A/R	RTC3176	All Drum Brakes
	Brake master cylinder overhaul kit	1	8G8837L	88
	Brake master cylinder overhaul kit	1	90606023	109
	Brake master cylinder overhaul kit	1	606415	Vehicles with servo
	Clutch master cylinder overhaul kit	1	8G8837L	
	Clutch slave cylinder overhaul kit	1	8G8600L	
	Repair kit for adjuster unit (transmission brake)	1	515924	
	Repair kit for expander unit (transmission brake)	1	515923	
	Blue brake grease, tube	1	27H7946	
	Red brake rubber grease, tube	1	514578	
	Anti-seizure compound, 85 gr tube	A/R	AEU1412	
	Plain bearing grease, 50 gr tube	A/R	AEU1642	
	Repair kit for fuel pump	1	AEU2760	2¼ litre Petrol
	Overhaul kit for fuel pump	1	18G8246L	models
	Repair kit for fuel pump	1	AEU2760	Diesel
	Overhaul kit for fuel pump	1	8G8845L	models
	Water pump overhaul kit	1	RTC3072	2¼ litre Petrol and all Diesel models
	Water pump overhaul kit	1	605716	2.6 litre Petrol
	Carburetter overhaul kit	1	605092	2¼ litre Petrol
	Carburetter overhaul kit	1	606098	2.6 litre Petrol
	Carburetter gasket kit	1	605093	2¼ Petrol
	Carburetter gasket kit	1	605857	2.6 litre Petrol
	Plastigauge strip, box of 24	1	605238	For checking bearing clearances
	'Loctite' retaining compound, 10cc bottle, Grade AVV	1	600303	
	Coolant inhibitor	A/R	605765	

* ASTERISK INDICATES A NEW PART WHICH HAS NOT BEEN USED ON ANY PREVIOUS MODEL

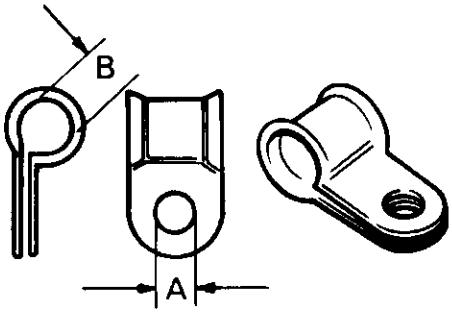

A = 13/64"	B = 9/32"	AEU1448
A = 13/64"	B = 7/16"	50640
A = 13/64"	B = 3/8"	50639
A = 13/64"	B = 1/2"	56666
A = 13/64"	B = 5/8"	56667
A = 13/64"	B = 7/8"	AEU1451
A = 1/4"	B = 7/16"	AEU1581
A = 19/64"	B = 9/32"	AEU1449
A = 19/64"	B = 3/8"	50642
A = 5/16"	B = 5/8"	AEU1450
A = 11/32"	B = 9/32"	BAU1689
A = 3/8"	B = 1/2"	RTC223

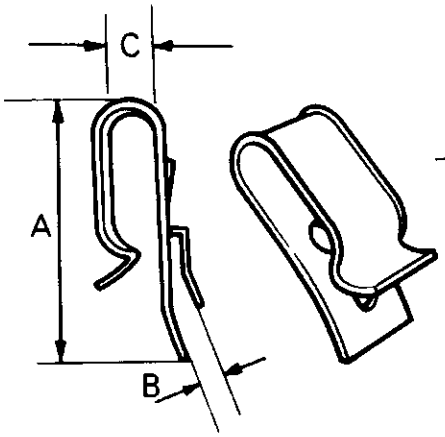

A=3/4" B=5/32" C=9/64"
236365

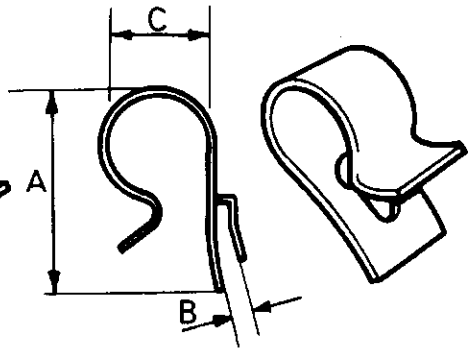

A=1" B=5/32" C=9/16"
240417

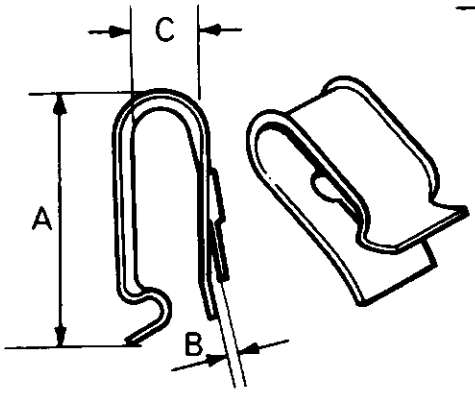

A=1.9/32" B=1/8" C=9/32"
233770

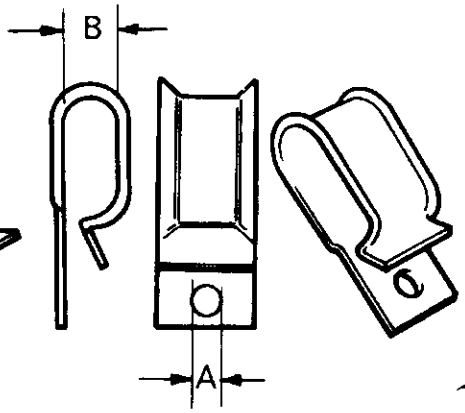

A=1/4" B=5/16" 589289

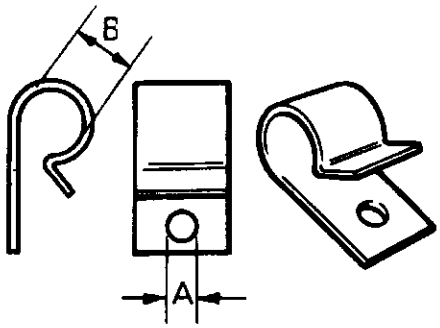

A=21/64" B=9/16" 239600
A=25/64" B=9/16" 240407

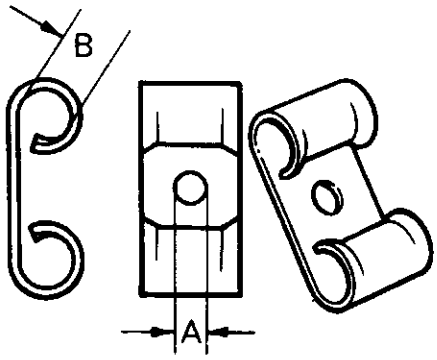

A=13/64" B=3/16" 236366

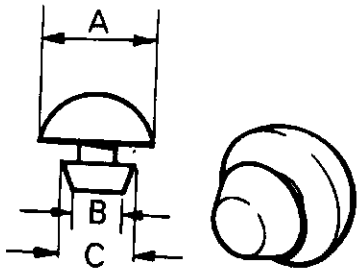

A=5/8" B=5/16" C=13/32"
73198
A=7/16" B=1/4" C=3/8"
307220

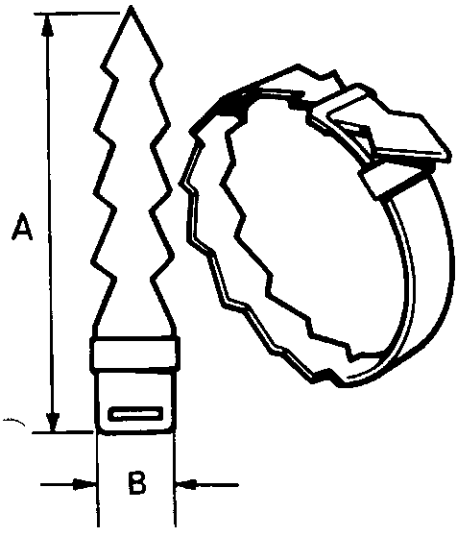

A=2¼" B=⅜" 240428
A=3¼" B=½" 240429
A=5" B=¾" RTC222
A=6¼" B=¾" 240431

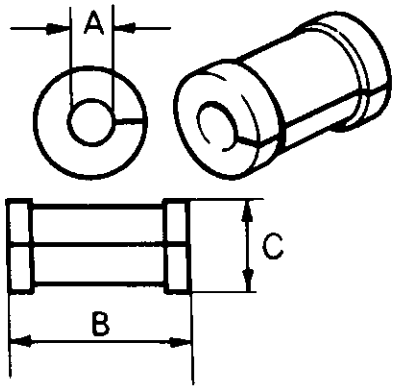

A=17/64" B=27/32" C=11/16"
6860L

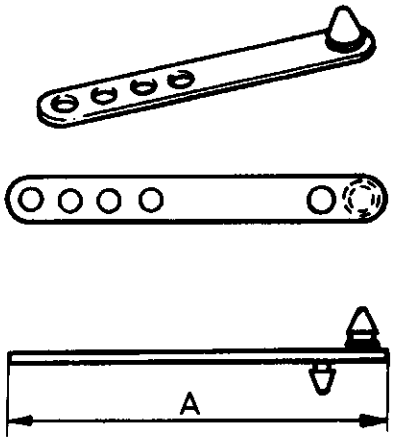

A=3.1/2" PRC1122

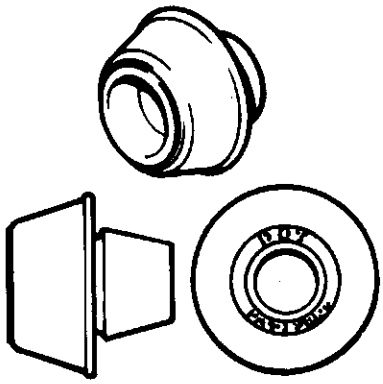

	To fit hole diameter
338029	5/16in
338013	3/8in
338014	7/16in
338015	1/2in
338018	5/8in
338020	3/4in
338021	13/16in
338023	1in
BD155888L	1.1/4in
338027	1.5/8in

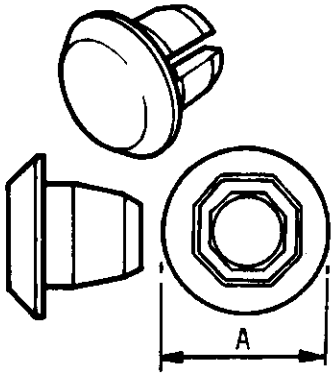

BD44001L A = 13.97 mm

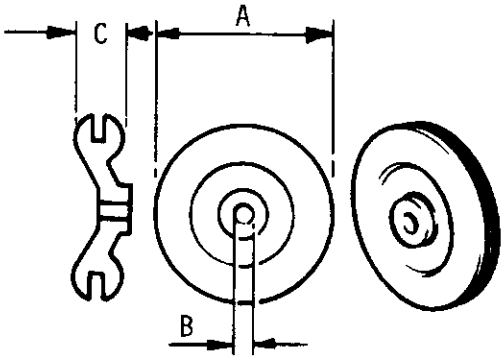

233244 Black A = 3/4in
B = 1/8in C = 3/16in

233243 Black A = 1in
B = 1/8in C = 1/4in

269257 Black A = 1.5/16in
B = 1/4in C = 5/16in

555711 Red A = 1.5/16in
B = 1/4in C = 5/16in

276054 Black A = 1.5/8in
B = 1/4in C = 3/8in

589452 Black A = 53mm
B = 7mm C = 17mm

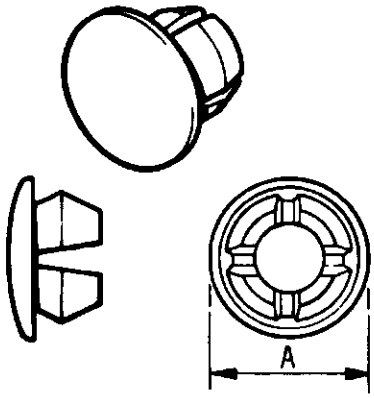

MRC1300 A = 17.45mm

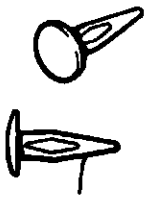

RTC3750

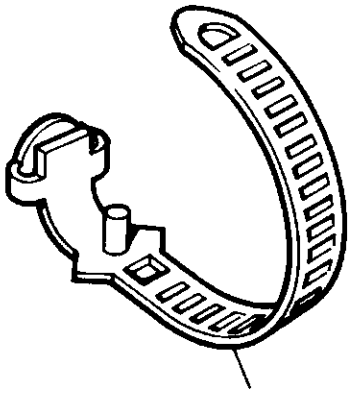

AAU3686

GROUP N
FINISHING MATERIALS - paint (one litre cans)

Supplies of re-finishing paints are available in one litre cans from International Pinchin Johnson outlets. To obtain details of the service and facilities offered, or in the event of any difficulties please contact I.P.J. direct.

For Home and European Markets:

International Pinchin Johnson
Transport Paints Division
P O Box 359
Rotton Park Street
Ladywood
Birmingham B16 0AD

Telephone: 021-455-9866

Telex: 339266

For Overseas Markets:

International Pinchin Johnson
Export Division
380 Richmond Road
Kingston-upon-Thames
Surrey
England

Telephone: 01-546-1234

Telex: 27527

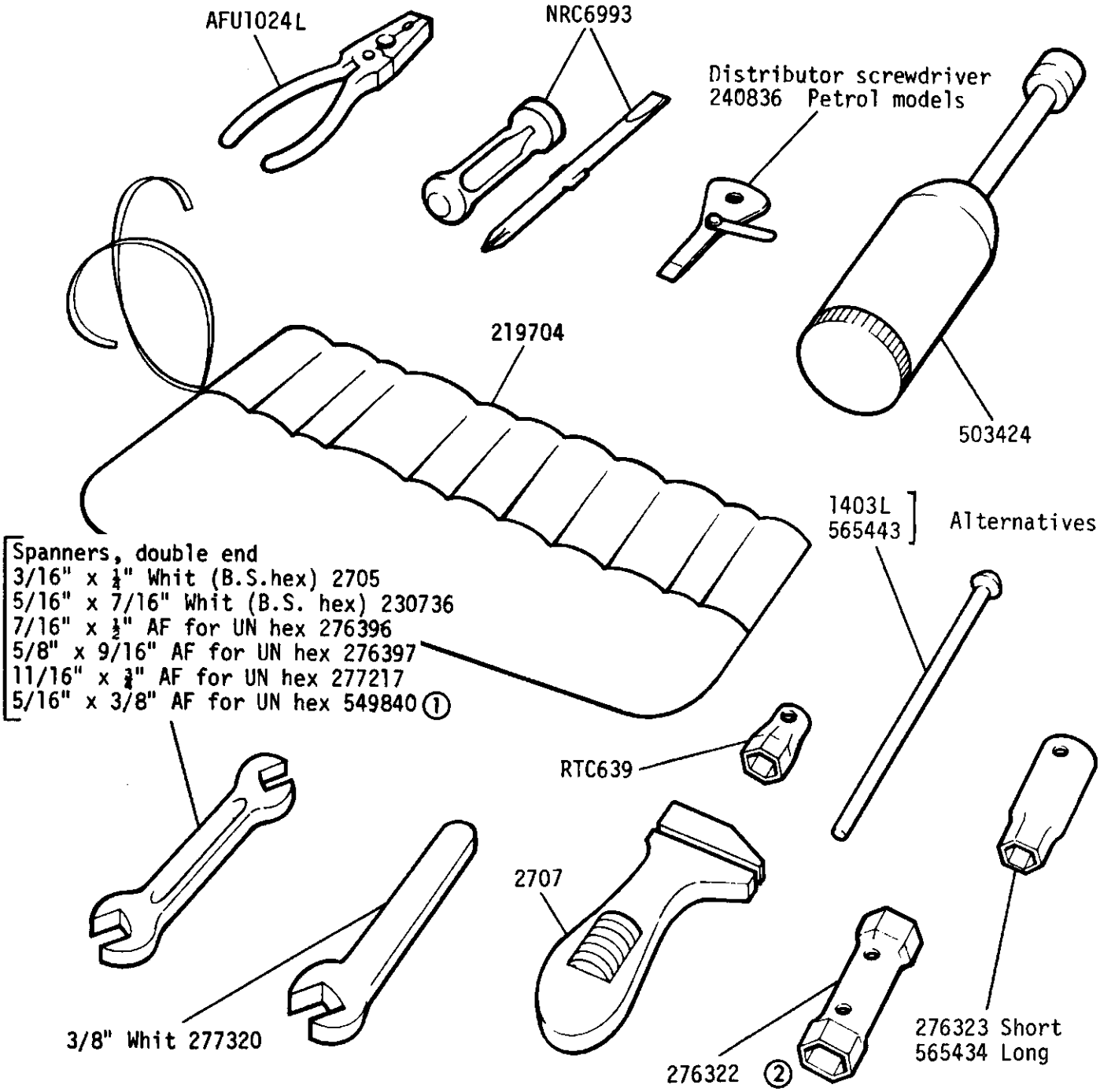

① For distributor pump bleed screw. Diesel models.

② Also required for radiator drain plug. All models.

Pliers	AFU1024L	I09 V8
Box spanner 6mm	AFU1003	
Spanner, double end 6mm & 8mm	AFU1004	
Spanner, double end 10mm & 12mm	AFU1005	

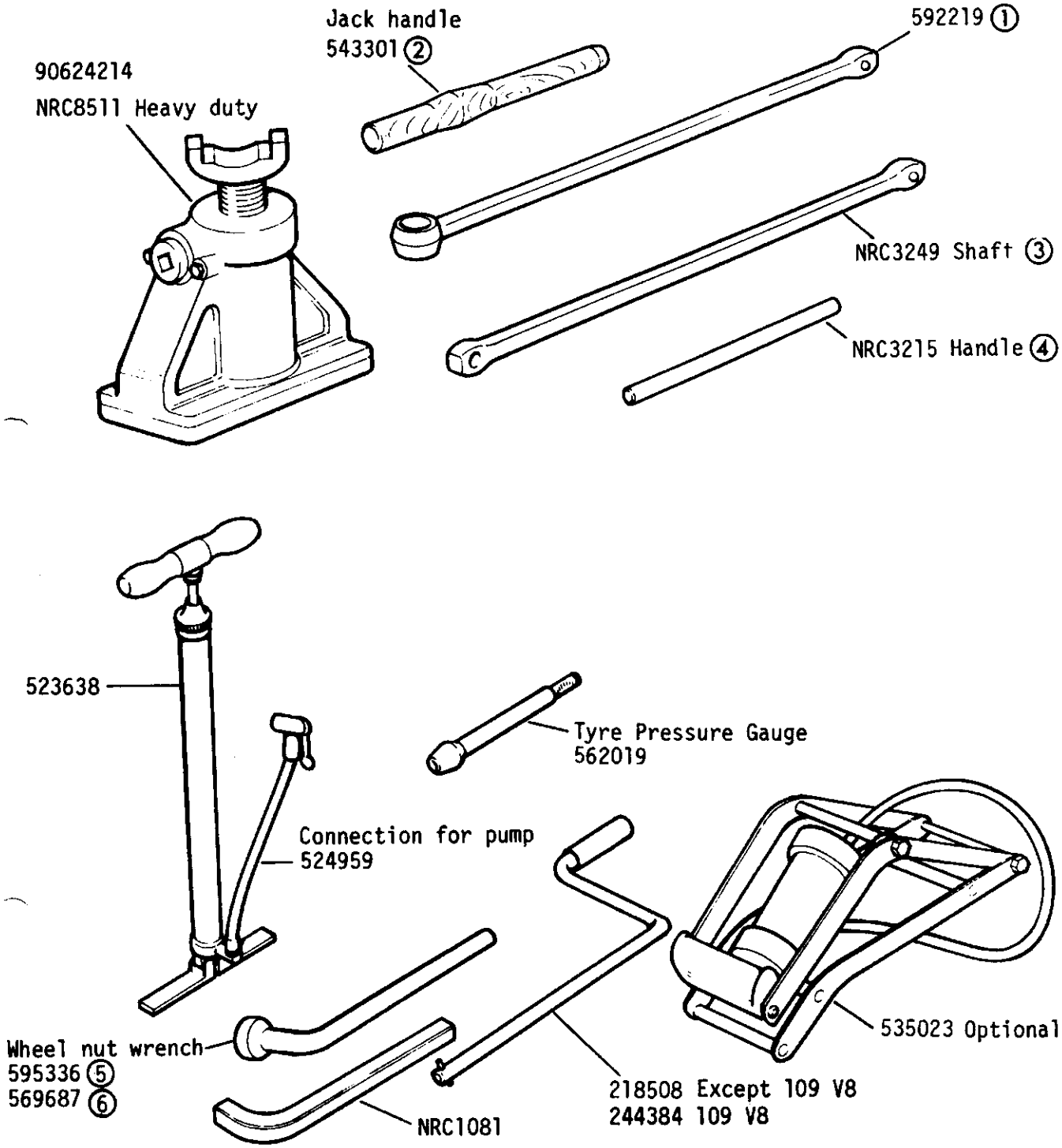

① For use with wooden type handle.
② Wooden type handle
③ For use with Steel type handle
④ Steel type handle
⑤ Except 1 Ton
⑥ 109" 1 Ton
⑦ Alternatives.

NRC5301 Jacking instruction label
Jack retaining bracket - 367030
Rivet - RU612183(2)
Retention ring - 371144 } ⑦
Retention ring - NRC9101 } ⑦

PLATE REF. 1 2 3 4	DESCRIPTION	QTY.	PART No.	REMARKS
	Inlet manifold assembly	1	596000	
	Exhaust manifold assembly	1	598473	
	Stud) Inlet to	1	598197	
	Stud) exhaust manifold	3	574048	
	Valve spring cap) For	4	268292	
	Valve split cotter halves) inlet valve	8	268293	
	Valve spring cap) For	4	90512144	
	Valve split cotter halves) exhaust	8	90512142	
	Valve locking sleeve) valve	4	90512143	
	Distributor complete	1	ERC3251	Lucas type 45D
	Carburetter	1	RTC2244	
	Circlip for lever	1	521452	
	Diaphragm unit	1	596384	
	Nut (2BA)	2	RTC608	
	Trigger valve	1	596385	
	Bolt (2BA x 9/16" long)	1	251018	
	Locknut (2BA)	1	251335	
	Adaptor assembly	1	596445	
	Mounting bracket EGR valve	1	ERC2605	
	Bolt (5/16" UNC x 1" long)) Bracket	1	SH505081L	
	Spring washer) to manifold	1	WM600051L	
	Exhaust gas recirculating valve	1	C41866L	
	Adaptor, carburetter to EGR valve	1	ERC3192	
	Sealing washer	2	232044	
	Hose, EGR valve to carburetter	1	ERC2604	
	Clip for hose	2	90577082	
	Exhaust gas damper assembly	1	ERC2600	
	Clip, front) For exhaust	1	598128	
	Clip, rear) gas damper	1	598127	
	Bolt (5/16" UNF x ⅞" long)) Fixing clips to	2	255227	
	Nut (5/16" UNF)) exhaust gas damper	2	NV605041L	
	Locknut, EGR valve to damper	1	160108	
	Clip, lead to solenoid	1	239600	
	Grommet for lead in clip	1	6860	
	Lead, coil to carburetter solenoid	1	575092	
	Carburetter elbow	1	596691	
	Hose, elbow to flame trap)	1	ERC2607	
	Flame trap) Evaporative	1	603330	
	Clip, hose to elbow) emission	1	546211	
	Clip, flame trap to hose) control	1	554260	
	Clip, pipe to rocker cover)	1	587119	
	Clip, emission control pipe to rocker cover	1	239600	
	Pipe, valve to inlet elbow	1	596438	
	Rocker cover assembly	1	524846	
	Adaptor assembly, carburetter to manifold	1	574749	
	Adaptor, breather connection	1	546590	
	Side cover and oil filler pipe	1	546592	
	Baffle plate	1	529394	
	Joint washer for baffle plate	1	247555	
	Oil filler cap	1	598231	
	Engine breather filter	1	546277	
	Clip, breather to air intake hose	2	AAU1981	
	Clip, pipe to oil filler	1	546541	
	Hose, breather to elbow	1	546548	

PLATE REF. 1 2 3 4	DESCRIPTION	QTY.	PART No.	REMARKS
	Plug for redundant hole in plate	1	BD44001	
	Gasket for mounting plate	1	90569612	
	Clip, switch plate to pedal box	1	AEU1448	
	Screw (No.8 UNC x ⅜" long) fixing bracket	4	78905	
	Clutch master cylinder	1	550732	
	Plain washer) On master cylinder	2	WB108051L	
	Nut (5/16" UNF)) push rod	2	NH605041L	
	Gasket, clutch master cylinder	1	592358	
	Bolt (5/16" UNF x 1⅛" long)) Master cylinder	2	SH605101L	
	Plain washer) to	2	3830L	
	Self-locking nut (5/16" UNF)) pedal bracket	2	NV605041L	
	Bolt (¼" UNF x 1" long)) In bracket for	1	SH604081L	
	Nut (¼" UNF)) pedal stop	1	NH604041L	
	Gasket, pedal bracket top cover	2	272819	1 on 109 models
	Top cover for pedal bracket	1	272713	
	Drive screw (No.10 x ½" long) top cover to bracket	6	78227	
	Anchor plate for spring	1	240708	
	Clutch pedal return spring	1	569701	
	Gasket, pedal box to toe box	1	NRC8885	
	Bolt (5/16" UNF x ⅞" long)) Pedal bracket	6	255227	
	Plain washer) and anchor	5	RTC610	
	Plain washer) plate to	1	4594L	
	Spring washer) dash	6	WM600051L	
	Clip for brake pipe, master cylinder to 4-way	1	243395	
	Screw (10 UNF x ½" long))	1	78929	
	Spring washer) Clip to toe box	1	WM702001L	
	Nut (10 UNF))	1	HN2005L	
	Pipe clip, brake pipe to pedal box	1	AAU7803	
	Switch bracket for handbrake	1	NRC2935	
	Pipe, shuttle valve to RH front	1	599343	
	Pipe, shuttle valve to LH front	1	599102	Except 2.6 Petrol
	Pipe, shuttle valve to LH front	1	594752	2.6 Petrol
	Brake pipe, shuttle valve to rear jump hose	1	594748	88
	Brake pipe, shuttle valve to rear jump hose	1	594747	109
	Shuttle valve	1	599443	
	Bracket for shuttle valve	1	594742	
	Bolt (M6x45mm, Hex. Hd) fixing bracket	1	BH106091L	
	Side panel, handbrake, service brake and trailer warning lights	1	MRC4165	
	Inner side panel, auxiliary switches and service brake check relay	1	MRC4516	
	Trim finisher	1	347924	
	Drive screw (No.6 UNC x ⅝" long)) Fixing trim	2	AB606051L	
	Lokut nut) finisher to	2	RTC3745	
	) side panel			
	Drive screw (No.6 x ⅜" long)) Switch panel	4	AB606031L	
	Plain washer) to front panel	4	4032L	

PLATE REF. 1 2 3 4	DESCRIPTION	QTY.	PART No.	REMARKS
	Brake warning label	1	347948	
	Edging strips	2	347308	
	Blanking plug	A/R	338015	
	Cable assembly, service brake warning light	1	PRC1815	
	Lens, service brake warning light	1	PRC1814	
	Lead, shuttle valve switch to connection	1	589210	
	Relay for service brake check	1	137747/1	
	Screw (10 UNF x ⅝" long))	2	78291	
	Plain washer) Fixing relay to	2	WC702101L	
	Spring washer) auxiliary side panel	2	WM702001L	
	Nut (10 UNF))	2	HN2005L	
	Servo unit	1	AEU1043	
	Plug for servo	1	90577611	
	Spring washer) Servo to	4	WL108001L	
	Nut (8mm)) pedal bracket	4	NH108041L	
	Pin) Servo to	1	90564812	
	Plain washer) brake	1	RTC611	
	Split pin) pedal	1	2393	
	Brake servo minor repair kit	1	18G8951L	
	Non-return valve kit	1	AEU1046	
	Brake master cylinder	1	NRC6191	88
	Brake master cylinder	1	NRC6096	109
	Brake master cylinder service kit	1	AAU6838	88
	Brake master cylinder service kit	1	AEU1047	109
	Filler cap for master cylinder	1	AAU7965	
	Fluid reservoir kit for master cylinder	1	AEU1045	
	Roll pin, brake master cylinder	1	AEU1044	
	Filter for brake fluid reservoir	1	592324	
	Brake pedal and bracket complete	1	569652	
	Self-sealing plug) Pedal	2	338027	
	Self-sealing plug) bracket	1	338029	
	Joint gasket, bracket to dash	1	90564832	
	Bolt (3/16" UNF x ⅝" long)) Fixing brake	6	SH605051L	
	Plain washer) pedal and	6	RTC610	
	Spring washer) bracket to dash	6	WM700051L	
	Brake pedal return springs	2	569291	
	Vacuum loss switch	1	589219	
	Cable assembly, handbrake switch	1	PRC2215	
	Cable assembly, park brake warning light	1	PRC1714	
	Park brake warning light lens	1	PRC1705	
	Handbrake switch	1	589063	
	End stop) Fixing switch	1	569117	
	Lock nut) to hand brake	1	BMK1903	
	Cleat for handbrake and park brake cables	7	240429	
	Stop light and pedal travel switch mounting plate	1	592564	
	Spring for mounting plate	1	592567	
	Bush stop light mounting	2	569609	
	Split pin, spring plate to mounting plate	1	PS612080	
	Split pin, spring plate stop	1	PS608080	
	Stop light switch, mechanical	1	575166	

SERIES 111 LAND ROVER 88 and 109 2¼ LITRE PETROL C.K.D.EXHAUST SYSTEM TO ADR27A REGULATIONS - AUSTRALIA

Plate Ref. 1 2 3 4	Description	Qty.	Part No.	Remarks
	Front exhaust pipe	1	598877	
	Exhaust bleed pipe	1	598879	
	Clip) To retain	6	598882	
	Nut) exhaust and	2	598880	
	Olive) bleed pipe	2	598899	
	Bolt (¼" UNF x 1⅛" long))	3	BH604091L	
	Bolt (¼" UNF x ⅞" long)) Fixing clips	3	SH604071L	
	Spring washer) to pipes	6	WM600041L	
	Nut (¼" UNF))	6	NH604041L	

84

PLATE REF. 1 2 3 4	DESCRIPTION	QTY.	PART No.	REMARKS
	Fuel filler assembly	1	NRC2536	
	Filler cap	1	NRC2538	
	Clip, breather connection to tee piece	2	572839	
	Clip, elbow to tee piece	1	565656	
	Grommet	1	70742	
	Tee piece	1	NRC2652	
	Petrol catch tank	1	592326	
	Bolt (M6 x 16 hex.hd))	4	SH106161L	
	Plain washer (6.4 x 19 x 1.6))Petrol catch tank	8	MRC5695	
	Spring washer (6.4 dia))to rear body	4	WL106001L	
	Nut (M6))	4	NH106041L	
	Support clamp for charcoal container	1	NRC7456	
	Bolt (M6 x 16 hex.hd)) Clamp to	1	BH106081L	
	Self-locking nut (M6)) container	1	NY106041L	
	Bolt (M6 x 16 hex.hd)))	2	SH106161L	
	Plain washer (6.4 x 19 x 1.6)) Clamp to fluid	2	MRC5695	
	Spring washer (6.4 dia)) tank mounting	2	WL106001L	
	Nut (M6)) bracket	2	NH106041L	
	Protection plate for pipe	1	577384	
	Bolt (5/16" UNF x ⅝" long))	1	SH605051L	
	Plain washer) Protection plate to	1	3830L	
	Spring washer) chassis outrigger	1	WM600051L	
	Nut (5/16" UNF))	1	NH605041L	
	Breather hose)	1	577466	
	Clip) Canister to	1	554260	
	Connector) flame trap	1	577465	
	Elbow)	1	577464	
	Cleat, vacuum pipe to breather hose	1	RTC222	
	Sealing pad to catch tank	1	598516	
	Cover for sealing pad	1	598517	
	Grommet	1	263524	
	Grommet	2	219680	
	Pipe catch tank to canister	1	NRC2016	
	Rubber connection	1	577459	
	Absorption canister	1	TKC1331L	) NOTE: When fitting TKC1331L
	'Tyrap' strap - fume pipe to air cleaner hose	1	594594	)in place of earlier cannister
	End cap) Blanking additional fume pipe	1	158554L	)(578065), End Cap 158554L and
	Clip)	1	UKC3794L	)Clip UKC3794L are also required.
	Grommet)	1	569492	
	Clip) Clipping pipework	3	56667	
	Clip) to vehicle	1	268883	
	Clip)	6	AEU1448	
	Pipe, catch tank to tee piece	1	NRC2192	
	Rubber connection pipe to catch tank	1	611110	
	Rubber elbow joint pipes	2	577458	
	Protection bracket, pipes to rear body front panel	1	NRC2193	
	Screw (2BA x ½" long))	8	234603	
	Plain washer) Clipping	8	WA702101L	
	Spring washer) pipework	8	WM702001L	
	Nut (2 BA)) to vehicle	8	RTC608	
	Clip)	2	543589	
	Drive screw(No.8 x ⅜" long))	3	72626	
	Top cover and tank mounting bracket	1	NRC1995	
	Breather hose	1	NRC2160	
	Rubber Connection	1	NRC2159	

1.184

PLATE REF. 1 2 3 4	DESCRIPTION	QTY.	PART No.	REMARKS
	Fuel filler assembly	1	NRC2536	
	Filler cap	1	NRC2538	
	Clip, breather connection to tee piece	2	572839	
	Clip, elbow to tee piece	1	565656	
	Tee piece	1	NRC2652	
	Petrol catch tank	1	592326	
	Mounting bracket for catch tank	2	NRC2018	
	Bolt (M6 x 16 Hex.hd))	6	SH106161L	
	Plain washer (6.4 x 19 x 1.6)) Petrol catch tank	10	MRC5695	
	Spring washer (6.4 Dia)) to rear body	6	WL106001L	
	Nut (M6))	6	NH106041L	
	Support clamp for charcoal container	1	NRC7456	
	Bolt (M6 x 16 Hex. hd)) Clamp to	1	BH106081	
	Self-locking nut (M6)) container	1	NY106041L	
	Bolt (M6 x 16 Hex.hd))	2	SH106161L	
	Plain washer (6.4 x 19 x 1.6)) Clamp to fluid	2	MRC5695	
	Spring washer (6.4 Dia)) tank mounting	2	WL106001L	
	Nut (M6)) bracket	2	NH106041L	
	Breather hose)	1	577466	
	Clip) Canister to	1	554260	
	Connector) flame trap	1	577465	
	Elbow)	1	577464	
	Cleat, vacuum pipe to breather hose	1	RTC222	
	Sealing pad for catch tank	1	598516	
	Cover for sealing pad	1	598517	
	Grommet	1	263624	
	Grommet	1	219680	
	Pipe, catch tank to canister	1	NRC2016	
	Rubber connection	1	577459	
	Adsorption canister	1	TKC1331L)	NOTE: When fitting TKC1331L
	Tyrap strap - fume pipe to air cleaner hose	1	594594	)in place of earlier cannister
	End cap) Blanking additional fume pipe	1	158554L	)(578065), End Cap 158554L and
	Clip)	1	UKC3794L)	Clip UKC3794L are also required
	Clip) Clipping pipework	2	56667	
	Clip) to vehicle	5	AEU1448	
	Pipe, catch tank to tee piece	1	NRC2015	
	Rubber elbow joint pipes	3	577458	
	Screw (2BA x ½" long))	6	234603	
	Plain washer) Clipping	6	WA702101L	
	Spring washer) pipework	6	WM702001L	
	Nut (2BA)) to	6	RTC608	
	Clip) vehicle	2	543689	
	Drive screw (No.8 x ⅜"long)	2	72626	
	Top cover and tank mounting bracket	1	NRC1995	
	Breather hose	1	NRC2160	
	Rubber connection	1	NRC2159	

PLATE REF. 1 2 3 4	DESCRIPTION	QTY.	PART No.	REMARKS
	Fuel filler assembly	1	NRC2536	
	Filler cap	1	NRC2538	
	Clip, breather connection to tee piece	2	572839	
	Clip, elbow to tee piece	1	565656	
	Tee piece	1	NRC2652	
	Petrol catch tank	1	592326	
	Front mounting bracket	2	NRC2088	
	Rear mounting bracket	2	NRC2089	
	Bolt (M6 x 16 Hex.hd)) Petrol catch	8	SH106161L	
	Plain washer (6.4 x 19 x 1.6)) tank to	6	MRC5695	
	Spring washer (6.4 dia.)) rear body	8	WL106001L	
	Nut (M6)) and mounting	6	NH106041L	
	Nutcert) angle	2	79240	
	Support clamp for charcoal container	1	NRC7456	
	Bolt (M6 x 16 Hex.hd)) Clamp	1	BH106081	
	Spring washer (6.4 x 19 x 1.6)) to	1	WL106001L	
	Nut (M6)) container	1	NH106041L	
	Bolt (M6 x 16 Hex.hd))	2	SH106161L	
	Plain washer (6.4 x 19 x 1.6)) Clamp to fluid	2	MRC5695	
	Spring washer (6.4 dia.)) tank mounting	2	WL106001L	
	Nut (M6)) bracket	2	NH106041L	
	Breather hose)	1	577466	
	Clip) Canister to	1	554260	
	Connector) flame trap	1	577465	
	Elbow)	1	577464	
	Cleat, vacuum pipe to breather hose	1	RTC222	
	Pipe, catch tank to breather	1	NRC2195	
	Absorption canister	1	TKC1331L)	NOTE: When fitting TKC1331L
	'Tyrap' strap - fume pipe to air cleaner hose	1	594594)	in place of earlier cannister
	End cap) Blanking additional fume pipe	1	158554L)	(578065), End Cap 158554L and
	Clip)	1	UKC3794L)	Clip UKC3794L are also required
	Screw (10 UNF x ½" long))	6	257017	
	Plain washer)	2	WA702101L	
	Spring washer) Clipping	6	WM702001L	
	Nut (10 UNF)) pipework	1	HN2005L	
	Nutcert (10 UNF)) to	5	79239	
	Clip) vehicle	2	AEU1449	
	Clip)	7	AEU1448	
	Clip)	2	543589	
	Drive screw (No.8 x ⅜" long))	3	72626	
	Pipe, catch tank to tee piece	1	NRC2015	
	Rubber connection pipe to catch tank	1	611110	
	Rubber elbow joining pipes	4	577458	
	Pipe, canister to elbow	1	NRC2194	
	Top cover and tank mounting bracket	1	NRC1995	
	Breather hose	1	NRC2214	
	Rubber connection	1	NRC2213	
	Side stiffener, wheelarch box	1	MRC2797	
	Pop rivet, fixing stiffener to wheelarch box	6	78248	

PLATE REF. 1 2 3 4	DESCRIPTION	QTY.	PART No.	REMARKS
	Fuel pipe	1	599225	
	Fuel pipe	1	599224	
	Clip, pipe to rocker cover	1	AEU1449	
	Vacuum switch assembly	1	614361	
	Mounting bracket for vacuum switch	1	587499	
	Locating plate for vacuum switch	1	611185	
	Bolt (10 UNF x ⅜" long))	2	257015	
	Spring washer) Vacuum switch	2	WM702001L	
	Nut (10 UNF)) to mounting bracket	2	HN2005L	
	Clip, vacuum pipe to manifold	1	BAU1689	
	Vacuum pipe, distributor to vacuum switch	1	ERC3094	
	Vacuum pipe, switch to manifold	1	613538	
	Pipe, manifold to trigger valve	1	598318	
	Pipe, trigger valve to diaphragm	1	598380	
	Banjo ring assembly	1	596387	
	Joint washer for banjo	2	231576	
	Banjo bolt for vehicles without servo	1	587502	
	Servo adaptor - vehicles with servo fitted	1	587517	
	Vacuum pipe, carburetter to EGR valve	1	ERC2915	
	Fuel filter assembly	1	90577508	
	Nutcert (¼"UNF))	2	79240	
	Screw (¼" UNF x ⅝" long)) Fixing filter bowl	2	255206	
	Plain washer) to RH side dash	2	WA106041L	
	Distance piece)	1	592269	
	Petrol catch tank	1	592326	
	Bolt (M6 x 16 Hex.hd))	4	SH106161L	)
	Plain washer (6.4 x 19 x 1.6)) Fixing petrol catch	8	MRC5695	) 88 vehicles
	Spring washer (6.4 Dia))tank to rear body	4	WL106001L	)
	Nut (M6))	4	NH106041L	)
	Support clamp, charcoal container	1	NRC7456	
	Bolt (M6 x 16 Hex.hd)) Fixing clamp	1	BH106081	
	Spring washer (6.4 x 19 x 1.6)) to	1	WL106001L	
	Nut (M6)) container	1	NY106041L	
	Bolt (M6 x 16 Hex.hd))	2	SH106161L	
	Plain washer) Clamp to fluid tank	2	MRC5695	
	Spring washer) and mounting bracket	2	WL106001L	
	Nut (M6))	2	NH106041L	
	Protection plate for pipe	1	577384	)
	Bolt (5/16" UNF x ⅝" long))	1	SH605051L	)
	Plain washer) Protection plate to	1	3830L	) 88 vehicles
	Spring washer) chassis outrigger	1	WM600051L	)
	Nut (5/16" UNF))	1	NH605041L	)

GROUP N 88 and 109" 2¼ PETROL. The following parts are required to enable Evaporative Emission System ADR27 to be fitted to vehicles already in Australia to comply with legal requirements.

Plate Ref. 1 2 3 4	Description	Qty.	Part No.	Remarks
	Air inlet elbow, carburetter	1	ERC2695	
	Hose, elbow to flame trap	1	587120	
	Flame trap	1	603330	
	Clip, hose to elbow	1	546211	
	Clip, flame trap to hose	1	554260	
	Clip, pipe to rocker cove r	1	587119	

GROUP N 109" 2.6 PETROL. The following parts are required to enable Evaporative Emission System ADR27 to be fitted to vehicles already in Australia to comply with legal requirements.

PLATE REF. 1 2 3 4	DESCRIPTION	QTY.	PART No.	REMARKS
	Flame trap	1	603330	
	Hose clip for flame trap	2	603887	
	'P' clip for vacuum pipe	1	AEU1450	
	Screw (M6 x 16 Hex hd))	1	SH106161L	
	Plain washer (6.4 x 19 x 1.6)) Fixing clip to	1	MRC5695	
	Spring washer (6.4 dia)) canister mounting	1	WL106001L	
	Nut (M6)) bracket	1	NH106041L	

PLATE REF. 1 2 3 4	DESCRIPTION	QTY.	PART No.	REMARKS
	Insert for exhaust valve seat	6	ERC4935	
	Top rocker cover assembly	1	ERC4970	
	Water pump and viscous drive hub assembly	1	598483	
	Joint washer for adaptor and support plate	2	568364	
	Adaptor, carburetter to cylinder head	1	ERC1935	
	Carburetter complete	1	ERC4848	
	Damper and oil cap	1	605848	
	Diaphragm	1	JS499L	
	Throttle return spring	1	516951	
	Throttle valve	1	AAU6564	
	Screw fixing throttle valve	2	601845	
	Float and arm	1	605833	
	Support plate for solenoid	1	ERC1936	
	Solenoid	1	UKC3741L	
	Screw (No.10 UNF x ⅜" long)) Fixing solenoid	2	257015	
	Spring washer) to support plate	2	WM702001L	
	Mounting bracket, front	1	ERC2363	
	Mounting bracket, rear	1	ERC2364	
	Fan pulley	1	ERC2370	
	Fan assembly	1	614739	
	Viscous coupling for fan	1	ERC2849	
	Bolt (¼" UNF x 1¼" long)) Fixing fan to	4	BH604101L	
	Nut (¼" UNF)) viscous coupling	4	NY604041L	
	Washer) Fixing viscous unit to	1	4910L	
	Nyloc nut (7/16" UNF)) hub and water pump	1	NY607041L	
	Fan and alternator belt	1	ERC1742	
	Pulley for air pump	1	ERC5169	
	Air injection pump	1	ERC2657)	
	Bolt (¼" UNC x 9/16" long)) Fixing pulley	3	253205)	Imperial
	Spring washer) to air pump	3	WM600041L)	
	Air injection pump	1	AFU1202)	
	Bolt	3	SH106141L)	Metric
	Spring washer	3	WL106001L)	
	Driving belt for air pump	1	ERC2662	
	Adjusting bracket for air pump, front	1	ERC2658	
	Adjusting bracket for air pump, rear	1	ERC2659	
	Anchor bracket for air pump	1	ERC2660	
	Support bracket for air pump	1	ERC2261	
	Distance piece for air pump	1	ERC2369	
	Bolt (5/16" UNF x 4¾" long) fixing air pump	3	BH605381	
	Bolt (¼" UNC x 1½" long)) Fixing anchor bracket	3	BH504121L	
	Plain washer) to cylinder head	3	4595	
	Bolt (5/16" UNF x ¾" long))	2	SH605061L	
	Plain washer) Fixing brackets	2	2266L	
	Spring washer) to air pump	5	WM600051L	
	Nut 5/16" UNF)	5	NH605041L	

PLATE REF. 1 2 3 4	DESCRIPTION	QTY.	PART No.	REMARKS
	Fuel trap	1	ERC2042	
	Clip fixing fuel trap to cylinder head	1	554049	
	Air pipe, carburetter to fuel trap	1	ERC3095	
	Air pipe, fuel trap to distributor	1	ERC3094	
	Air pipe, carburetter to distributor	1	ERC3093	
	Cleat) Fixing	1	240429	
	Cleat) pipes	2	RTC222	
	Exhaust manifold adaptor, rear	1	ERC1460	
	Exhaust manifold adaptor, front	1	ERC1456	
	Air manifold assembly	1	ERC3525	
	Air tube assembly	4	ERC1454	
	Check valve, air manifold	1	UKC2643L	
	Hose, air pump to check valve	1	ERC2456	
	Clip, hose to rocker cover	1	602539	
	Clip, hose to check valve	1	RTC3497	
	Clip, hose to air pump	1	613187	
	Stud) Manifold and exhaust	5	TE606231	
	Stud) adaptors	2	252626	
	Distributor	1	ERC1837	
	Distributor cap	1	605544	
	Brush and spring for cap	1	262703	
	Rotor arm	1	RTC3615	
	Vacuum unit	1	AAU6565	
	Contact points	1	RTC3270	
	Condenser	1	RTC3472	
	Sealing ring	1	513682	
	Screen cover for distributor	1	ERC783	
	Heat shield for distributor	1	ERC1469	
	Hose, rocker cover breather to elbow	1	ERC3343	
	Clip,) Fixing hose	1	ERC3324	
	Spring washer) to stud on	1	WM600041L	
	Nut (¼" UNF)) rocker cover	1	NH604041L	
	Cable assembly, coil to solenoid valve and earth	1	PRC1308	
	Cleat, cable to main harness and engine harness	2	RTC222	
	Cleat, earth lead to water temperature lead	1	240429	
	Fan and air pump shroud	1	NRC2106	
	Drive screw (No.10 x ⅜" long) fixing shroud	4	AB610051L	
	Vacuum hose	1	CRC2131	

PLATE REF. 1 2 3 4	DESCRIPTION	QTY.	PART No.	REMARKS
	GROUP B - ENGINE			
	Clip, rocker cover L.H.	1	ERC5558	
	Cylinder block assembly	1	ERC6934	
	GROUP H - FUEL, EXHAUST AND EMISSION SYSTEMS			
	Carburetter L.H.	1	ERC4702	
	Carburetter R.H.	1	ERC4703	
	Heat shield carburetter R.H.	1	ERC4794	
	Adaptor, vacuum non-return valve	1	ERC4809	
	Inlet manifold assembly	1	ERC4819	
	Adaptor, inlet manifold	1	ERC4820	
	Lock nut, elbow, inlet manifold	1	ERC4825	
	Air manifold L.H. assembly	1	ERC5477	
	Petrol pipe assembly	1	ERC5504	
	Y connection	1	ERC5511	
	Adaptor assembly, air cleaner	1	ERC5513	
	Connecting tube	1	ERC5547	
	Vent pipe R.H., adaptor Y piece	1	ERC5548	
	Vent pipe L.H., adaptor Y piece	1	ERC5549	
	Vent pipe, Y connection, charcoal canister	1	ERC5550	
	Vacuum pipe, EGR valve, to tee piece	1	ERC5551	
	Vacuum pipe, L.H. carburetter to tee piece	1	ERC5552	
	Air inlet duct assembly	1	ERC5560	
	Air intake elbow	1	ERC5603	
	Choke connecting pipe assembly	1	ERC5610	
	Crankcase breather assembly	1	ERC5761	
	Blanking plug, air cleaner	1	ERC5869	
	Hose, breather, crankcase to breather filter	1	ERC5956	
	Hose, breather filter, to charcoal canister	1	ERC5957	
	Bracket breather clip	1	ERC5958	
	Vacuum pipe, tee piece to distributor	1	ERC6318	
	Elbow intake manifold	1	ERC6353	
	Pipe assembly, EGR to inlet manifold	1	ERC6354	
	Front mounting bracket	2	NRC2087	
	Support clamp for charcoal canister	1	NRC4776	
	Connecting hose, canister	1	NRC4790	
	Shield for air pump pulley	1	NRC4871	
	Stiffening plate	1	NRC4874	
	Fuel pipe, assembly spill return to tank	1	NRC4876	
	Breather pipe, charcoal canister	1	NRC5027	
	Plain washer mounting evaporative fuel tank	2	MRC5695	
	Air injection pump	1	AFU1331	
	Pulley	1	ERC2653	

PLATE REF. 1 2 3 4	DESCRIPTION	QTY.	PART No.	REMARKS
	GROUP J - COOLING, HEATING AND AIR CONDITIONING			
	Top water hose	1	NRC4858	
	Hose, radiator to overflow bottle	1	NRC4878	
	GROUP K - ELECTRICAL, WASHER-WIPERS, INSTRUMENTS			
	Spacer, securing H.T. lead/L.T. lead	1	ERC2144	
	Distributor complete	1	ERC4823	
	Ignition lead set	1	ERC5505	
	Retainer, spark plug cables	1	ERC5512	
	Speedometer drive cable	1	PRC2490	One Piece
	Speedometer drive cable - instrument end	1	PRC3717	) Two
	Speedometer drive cable - drive end	1	PRC3721	) Piece.

PART NUMBER		DESCRIPTION	REF.NO.
1035		STEEL BALL	1D05
1403	L	TOMMY BAR	2L11
1481	L	BALL END	1N10
1481	L	BALL END-ACCELERATOR LEVER	1O08
1481	L	BALL END-ACCELERATOR LEVER	1O10
1481	L	BALL END	1O12
1510		SCREW-BRAKEDRUM	1L03
1510		SCREW-BRAKE DRUM	1L04
1510		BRAKE DRUM SCREW	1L02
1643		STEEL BALL	1H11
1645		BEARING	1H04
2096		NUT	1H09
2203	L	WASHER PLAIN	1F10
2203	L	WASHER	1F11
2203	L	PLAIN WASHER	1N11
2204	L	WASHER-PLAIN	1F07
2215	L	WASHER-PLAIN	2G06
2215	L	WASHER	2G07
2217	L	WASHER-PLAIN	2E16
2219		PLAIN WASHER	1G02
2219		WASHER-PLAIN	1G03
2219		WASHER-PLAIN	1N03
2219		PLAIN WASHER	2G07
2265	L	PLAIN WASHER	1O02
2266	L	WASHER	1D14
2266	L	WASHER PLAIN	2E11
2266	L	WASHER-PLAIN	2E13
2266	L	WASHER-PLAIN	2E15
2266	L	WASHER	2E16
2266	L	WASHER	2J13
2266	L	PLAIN WASHER FIXING BRACKETS	2L17
2289		SPRING WASHER	2H13
2390	L	SPLIT PIN	1O12
2392	L	PIN-SPLIT	1L05
2392	L	PIN	1L14
2392	L	PIN-SPLIT	1L15
2392	L	PIN-SPLIT	1O08
2393		PIN-SPLIT	1K06
2393		PIN-SPLIT	1K07
2393		SPLIT PIN	1L06
2393		PIN-SPLIT	2G16
2393		PIN-SPLIT	2L13
2422	L	SPLIT PIN	1H12
2422	L	PIN-SPLIT	1H13
2499		LOCKER	1H11

PART NUMBER		DESCRIPTION	REF.NO.
2500		LOCKING TAB WASHER	1D06
2504		LOCKER	1D05
2529		SCREW	1H08
2556		SPLIT PIN	1D05
2630		PLAIN WASHER	2G17
2705		SPANNER	2L11
2707		ADJUSTABLE SPANNER	2L11
2719		PLAIN WASHER	2K04
2827		NUT	1J15
2827		NUT	1J16
2827		NUT	1J17
2827		NUT	1J18
2828		NUT 0.3125 BSF	1H09
2828		NUT	1H10
2828		NUT	1L05
2851	L	WASHER-PLAIN	1C14
2851	L	WASHER-PLAIN	1D15
2851	L	WASHER-PLAIN	1E13
2851	L	WASHER-PLAIN	1N11
2851	L	WASHER-PLAIN	1N12
2851	L	WASHER-PLAIN	1N13
2851	L	WASHER-PLAIN	1N13
2851	L	WASHER	2G02
2851	L	WASHER-PLAIN	2G07
2876		PLAIN WASHER	1H12
2876		WASHER-PLAIN	2G04
2974		SPLIT PIN	1L14
2982		RIVET	1I05
2986		RIVET	2H08
2995		LOCKER	1C05
2995		WASHER LOCK	1D03
2995		WASHER LOCK	1E05
3036	L	WASHER PLAIN	1F08
3036	L	WASHER-PLAIN	2E16
3101		WASHER	1002
3101		WASHER-SPRING	1004
3109		WASHER	1002
3109		WASHER-PLAIN	1003
3109		WASHER-PLAIN	1005
3109		WASHER-PLAIN	1006
3127		SPLIT PIN	1J10
3200		STUD	1G02
3200		STUD	1H09
3238		STUD	1H03
3259		SLOTTED NUT	1H08

PART NUMBER		DESCRIPTION	REF.NO.
3259		NUT-CASTLE	1H10
3259		NUT-CASTLE	1J07
3259		NUT-CASTLE	1J10
3290		PLUG	1F02
3290		PLUG	1G02
3290		PLUG-DRAIN-FLYWHEEL HOUSING	1G03
3290		PLUG-DRAIN-BELL HOUSING	1I02
3290		PLUG	1I05
3291	L	PLUG	1D09
3292		FILLER PLUG	1H03
3292		PLUG-OIL FILLER	1H09
3292		PLUG-OIL LEVEL	1I04
3292		PLUG-OIL DRAIN	1J06
3294		PLUG	1J02
3294		PLUG-OIL FILLER-AXLE	1J03
3294		PLUG-OIL LEVEL	1J07
3299		PLAIN WASHER	1L15
3299		WASHER-PLAIN	1O10
3319		STUD	1H03
3414	L	PIN-SPLIT	1F05
3547		RIVET	2J06
3547		RIVET	2J07
3549	L	SNAP IN CONNECTOR 1 WAY	1N08
3557	ZN	WASHER PLAIN	2J06
3557	ZN	WASHER PLAIN	2J07
3649		SELECTOR SPRINGS	1H11
3650		STUD	1G02
3650		STUD	1H09
3651		STUD	1G02
3739		BOLL	1C04
3739		BALL-STEEL	1E05
3748		STEEL BALL	1C04
3748		BALL-STEEL	1E04
3817		WASHER	2G08
3817		WASHER-PLAIN	2G10
3817		WASHER-PLAIN	2G11
3817		WASHER-PLAIN	2H07
3817		WASHER-PLAIN	2H18
3817		WASHER-PLAIN	2I04
3819		NUT 0.25 BSF	1G02
3819		NUT	1H09
3819		NUT	1H12
3819		NUT	1J05
3830	L	WASHER-PLAIN	1G04
3830	L	WASHER PLAIN	1K03

PART NUMBER		DESCRIPTION	REF.NO.
3830	L	WASHER PLAIN	1K04
3830	L	WASHER-PLAIN	1L07
3830	L	WASHER-PLAIN	1N10
3830	L	WASHER-PLAIN	1002
3830	L	WASHER-PLAIN	1007
3830	L	WASHER-PLAIN	1009
3830	L	WASHER-PLAIN	1011
3830	L	WASHER-PLAIN	2G05
3830	L	WASHER-PLAIN	2G17
3830	L	WASHER-PLAIN	2H15
3830	L	PLAIN WASHER	2H16
3830	L	WASHER PLAIN	2I02
3830	L	WASHER-PLAIN	2K02
3830	L	WASHER-PLAIN	2K03
3830	L	WASHER-PLAIN	2K04
3830	L	WASHER-PLAIN	2L12
3830	L	WASHER-PLAIN	2L14
3830	L	WASHER-PLAIN	2L15
3831	L	WASHER PLAIN	1K04
3831	L	PLAIN WASHER	2H02
3842		WASHER PLAIN	2H12
3842		WASHER-PLAIN	2K06
3851		WASHER PLAIN	1L07
3852	L	WASHER PLAIN	2H14
3852	L	WASHER-PLAIN	2H17
3852	L	PLAIN WASHER	2H18
3852	L	WASHER-PLAIN	2J06
3852	L	WASHER-PLAIN	2J07
3852	L	WASHER-PLAIN	2K06
3890		SCREW	1002
3890		SCREW	1004
3900	L	WASHER-PLAIN	2F09
3900	L	WASHER-PLAIN	2G05
3900	L	WASHER-PLAIN	2G07
3900	L	WASHER PLAIN	2G10
3900	L	WASHER-PLAIN	2G11
3900	L	WASHER-PLAIN	2G15
3900	L	WASHER-PLAIN	2H02
3900	L	WASHER-PLAIN	2H04
3900	L	WASHER-PLAIN	2H07
3900	L	WASHER-PLAIN	2H07
3900	L	WASHER-PLAIN	2H15
3900	L	WASHER-PLAIN	2H17
3900	L	WASHER-PLAIN	2H18
3900	L	WASHER-PLAIN	2K04

PART NUMBER		DESCRIPTION	REF.NO.
3900	L	WASHER-PLAIN	2K05
3900	L	WASHER-PLAIN	2K06
3933	L	WASHER-PLAIN	1D15
3933	L	WASHER-PLAIN	1002
3933	L	WASHER-SPRING	1003
3933	L	WASHER-PLAIN	1005
3933	L	WASHER-PLAIN	1006
3947	L	PLAIN WASHER	2G18
3947	L	WASHER-PLAIN	2H16
3958	L	PIN-SPLIT	1I12
3958	L	PIN-SPLIT	2H03
3958	L	PIN-SPLIT	2H06
3964	L	SPRING CLIP	1013
3964	L	SPLIT PIN	1012
3966	L	WASHER-PLAIN	2G18
3966	L	PLAIN WASHER	2H05
3966	L	WASHER-PLAIN	2H07
3966	L	WASHER-PLAIN	2H15
3972		SCREW	1002
3972		SCREW	1004
3982	L	PLAIN WASHER	2H02
3982	L	WASHER-PLAIN	2H05
3982	L	WASHER PLAIN SPACER	2H12
3987	L	PLAIN WASHER	1L09
3987	L	WASHER PLAIN	2F07
3987	L	WASHER-PLAIN	2I04
4023		NUT	2F03
4023		NUT	2F04
4023		NUT	2F15
4023		NUT 4 BA	2H03
4023		NUT	2H06
4030	L	WASHER-PLAIN	1N14
4030	L	WASHER-PLAIN	1N15
4030	L	WASHER-PLAIN	1N16
4030	L	WASHER-PLAIN	1N17
4030	L	WASHER-PLAIN	2H02
4030	L	WASHER-PLAIN	2H03
4030	L	WASHER-PLAIN	2H06
4030	L	PLAIN WASHER	2I02
4030	L	WASHER-PLAIN	2J09
4030	L	WASHER-PLAIN	2K04
4030	L	WASHER-PLAIN	2K05
4032	L	PLAIN WASHER	2F13
4032	L	PLAIN WASHER	2J08
4032	L	PLAIN WASHER	2L12

PART NUMBER		DESCRIPTION	REF.NO.
4034	L	PLAIN WASHER	2G12
4034	L	WASHER-PLAIN	2H15
4034	L	WASHER-PLAIN	2J09
4034	L	WASHER-PLAIN	2J11
4034	L	WASHER PLAIN	2J13
4063		PIN-SPLIT	1J16
4063		PIN-SPLIT	1J17
4071		WASHER-PLAIN	2H15
4075	L	SPACER-FRONT COVER BOLT	1F04
4085		WASHER	1G02
4233		WASHER PLAIN	2L03
4542	L	WASHER-GERMANY ONLY	2G02
4566		WASHER	1E08
4574		PLAIN WASHER	1L14
4574		WASHER-PLAIN	2G10
4590		PACKING WASHER	2K03
4590		WASHER PLAIN	2K04
4592	L	PLAIN WASHER	2K02
4594	L	SPACER	1F06
4594	L	WASHER-PLAIN	1G04
4594	L	WASHER	1I05
4594	L	WASHER-PLAIN	1I05
4594	L	PLAIN WASHER	1L06
4594	L	WASHER-PLAIN	2L12
4595		WASHER-PLAIN	1D14
4595		PLAIN WASHER FIXING ANCHOR	2L17
4866		WASHER	1C07
4910	L	WASHER	1D10
4910	L	PLAIN WASHER	1D11
4910	L	WASHER	1E10
4910	L	WASHER-PLAIN	1F11
4910	L	WASHER FIXING VISCOUS UNIT	2L17
5852		OIL RETAINER	1H11
5853		RETAINING PLATE	1H11
5854		RETAINING PLATE	1H11
6395	L	DOWEL	1C07
6395	L	DOWEL	1D04
6395	L	DOWEL	1D09
6395	L	DOWEL	1D10
6395	L	DOWEL	1E08
6397		ROLLER BEARING	1H04
6405		PEG	1H04
6860	L	GROMMET	1G04
6860	L	GROMMET-SPEEDOMETER CABLE	1H09
6860	L	GROMMET	1L07

PART NUMBER		DESCRIPTION	REF.NO.
6860	L	GROMMET	1L07
6860	L	GROMMET-BRAKE PIPE	1L09
6860	L	GROMMET	1L10
6860	L	GROMMET	1L11
6860	L	GROMMET	1L12
6860	L	GROMMET	1L13
6860	L	GROMMET-RUBBER	2L08
6860	L	GROMMET	2L12
7015	L	CUP WASHER	1D15
7289		DOWEL	1H03
7316		JOINT WASHER	1J08
8407	L	SPLINED END FOR PROP SHAFT	1J02
8407	L	SPINE END-PROPELLOR SHAFT	1J03
8407	L	SPLINE END-PROPELLER SHAFT	1J14
8566	L	BUSH	1G02
8566	L	BUSH-FLYWHEEL	1G03
8566	L	BUSH-OUTPUT SHAFT	1H10
9005		LOCKER	1D08
9093		WASHER	1C05
9093		PLATE-CAMSHAFT WHEEL	1D06
9093		PLATE-RETAINING CAMSHAFT	1E05
9161		CLAMP	1D13
9210		LOCKER	1C05
9210		WASHER-LOCK	1D06
9210		WASHER-LOCK	1E05
9225		OIL PUMP SHIELD	1D05
9960		CIRCLIP	1H04
11820	L	CLIP	1L09
11820	L	CLIP	1L10
11820	L	CLIP	1L11
11820	L	CLIP	1L12
11820	L	CLIP	1L13
11966		SPRING WASHER	1L07
12882	L	EMISSION PACK 12000 MILES	1M08
13296		SEALING STRIP	2L07
20034		WOODSCREW	2K04
20034		WOODSCREW	2K05
20138		DRIVE SCREW	2K04
20138		DRIVE SCREW	2K05
20138		WOODSCREW	2K06
20147		DRIVE SCREW	2K04
20147		DRIVE SCREW	2K05
20147		WOODSCREW	2K06
21563		RIVET	2H04
21563		RIVET	2H07

PART NUMBER	DESCRIPTION	REF.NO.
40441	WASHER	2E02
40441	WASHER-SPARKING PLUG	2E03
40441	WASHER-SPARKING PLUG	2E04
40441	WASHER-SPARKING PLUG	2E05
40742	BOLT(0.4375" BSF X 2.1875")	1J07
40756	LOCKING RING	1J07
41045	BEARING	1J08
41379	CLIP-(BREATHER TO FRAME)	1J02
41379	CLIP-(BREATHER TO FRAME)	1J03
41379	CLIP-BRAKE PIPE	1L07
41379	CLIP	1L09
41379	CLIP	1L12
50183	CABLE CLIP	1L07
50216	GASKET-INSPECTION PLATE	1G03
50235	BRAKE CATCH	1L14
50322	CLIP	1D10
50446	PIN	1G04
50446	PIN	1L06
50525	SELF LOCKING NUT	1L05
50526	NUT-SELF LOCKING	1H09
50552	DRIVE SCREW	2F12
50639	CLIP	1N12
50639	CLIP	2L08
50640	CLIP FOR DASH HARNESS	2L08
50642	CABLE CLIP	1N12
50642	CLIP	2L08
50702	THRUST WASHER	1H04
50703	THRUST WASHER	1H04
52124	DOWEL FLYWHEEL HOUSING	1C02
52124	DOWEL	1D03
52124	DOWEL	1E02
52246	SCREW	1H03
52278	SEAL-OIL PUMP	1D05
52278	SEAL-DISTRIBUTOR	2E02
52278	WASHER CORK	2E03
55636	DOWEL	1H03
55636	DOWEL	1H09
55638	PLUNGER	1H11
55697	PEG	1H11
55714	BEARING	1H04
55778	STUD	1H03
56102	SPRING-DETENT-TRANSFER SHAFT	1H13
56102	SPRING	1H11
56140	PLATE-FLYWHEEL INSPECTION	1G03
56666	CLIP	1L07

PART NUMBER		DESCRIPTION	REF.NO.
56666		CLIP-BRAKE PIPE GROMMET	1L09
56666		CLIP	1L10
56666		CLIP	1L11
56666		CLIP	1L12
56666		CLIP	1L13
56666		CLIP	2L08
56666		CLIP	1L07
56667		CLIP-PENTHOUSE HOSE	2D04
56667		CLIP	2L14
56667		CLIP FIXING HARNESS	2L08
59663		SPRING	1L15
69310	ZN	SCREW	2J06
69310	ZN	SCREW	2J07
70742		GROMMET-FUEL BREATHER PIPE	1N17
70742		GROMMET	2K14
70823		WASHER-STAR LOCK	1G05
72626		DRIVE SCREW	1J02
72626		DRIVE SCREW	1J03
72626		SCREW	1L09
72626		DRIVE SCREW	1L10
72626		DRIVE SCREW	1L11
72626		DRIVE SCREW	1L12
72626		DRIVE SCREW	1L13
72626		DRIVE SCREW	1N11
72626		SCREW	2F10
72626		SCREW	2F11
72626		DRIVE SCREW	2F15
72626		DRIVE SCREW	2L14
72626		DRIVE SCREW	2L15
72628		DRIVE SCREW	2F09
73198		RUBBER PLUG	2K08
73198		PLUG-RUBBER	2L08
73962		CUP WASHER	2K04
73962		CUP WASHER	2K05
73979		BIFURICATED RIVET	2H02
73979		RIVET	2H04
73979		RIVET	2H07
73979		RIVET-BIFURCATED	2J09
73979		RIVET-BIFURCATED	2J10
73979		RIVET-BIFURCATED	2J11
74838		BOLT	1L07
77626		WASHER-FAN DISC	1E11
77701		SCREW	2F15
77869		BOLT	2G17
77869		SCREW	2H02

PART NUMBER	DESCRIPTION	REF.NO.
77869	SCREW	2H05
77869	SCREW	2H07
77869	SCREW	2H17
77869	SCREW	2H18
77869	SCREW	2I02
77869	SCREW	2K04
77869	SCREW	2K05
77899	SCREW	2F03
77899	SCREW (4 BA X 0.500")	2F04
77899	SCREW	2H03
77899	SCREW	2H06
77941	SCREW	1N14
77941	SCREW	1N15
77941	SCREW	1N16
77941	SCREW	1N17
78120	SCREW	1H11
78120	SCREW	2J09
78120	SCREW	2J11
78120	SCREW	2J12
78120	SCREW	2J13
78120	SCREW	2K02
78159	GLAZING STRIP	2H16
78159	GLAZING STRIP	2G10
78208	SPECIAL SET BOLT	2G07
78208	BOLT	2G13
78208	SCREW	2H02
78208	SCREW	2H04
78208	SCREW	2H07
78210	SCREW	2G10
78210	SCREW	2G11
78210	BOLT	2H07
78227	SCREW	1G04
78227	SCREW	1L06
78227	DRIVE SCREW	2L12
78233	SCREW	2H18
78237	SPIRE NUT	2G11
78237	SPIRE NUT	2G12
78237	CLIP-TRIM RETAINING	2J09
78237	CLIP-TRIM RETAINING	2J11
78237	CLIP TRIM RETAINING	2J13
78237	CLIP-TRIM RETAINING	2J13
78248	RIVET	2G02
78248	RIVET	2G08
78248	POP-RIVET	2G09
78248	POP-RIVET	2G12

PART NUMBER	DESCRIPTION	REF.NO.
78248	POP RIVET	2G13
78248	POP-RIVET	2G15
78248	RIVET	2G17
78248	POP RIVET	2H02
78248	POP-RIVET	2H03
78248	POP RIVET	2H04
78248	POP RIVET	2H05
78248	POP RIVET	2H06
78248	POP RIVET	2H07
78248	POP-RIVET	2H08
78248	POP RIVET	2H13
78248	POP RIVET	2H16
78248	POP RIVET	2H17
78248	POP RIVET	2J08
78248	POP RIVET	2K03
78248	POP RIVET	2K04
78248	POP RIVET	2K08
78248	POP RIVET	2L15
78257	POP RIVET	2G02
78257	POP RIVET	2G05
78257	POP RIVET	2G09
78257	POP RIVET	2H17
78274	SCREW	2H17
78276	SCREW	2F15
78291	SCREW	2F13
78291	SCREW 10 UNF X 0.625"	2L13
78321	RIVET	2G13
78321	RIVET	2G14
78321	RIVET	2G17
78321	RIVET	2H03
78321	RIVET	2H06
78321	RIVET	2H13
78321	RIVET	2H18
78322	DRIVE SCREW 0.50 NO 8	1N11
78322	DRIVE SCREW	1N12
78322	DRIVE SCREW	1N13
78322	DRIVE SCREW	1N13
78329	MUSHROOM HEAD SCREW	2H06
78348	SCREW 10 UNF X 0.500"LONG	2D02
78348	SCREW	2F02
78348	SCREW	2G09
78358	SCREW	2J10
78382	SCREW	2H17
78384	SCREW	1O14
78384	SCREW	2H06

PART NUMBER	DESCRIPTION	REF.NO.
78384	SCREW	2J03
78384	SCREW	2J05
78389	SCREW	2H18
78390	POP RIVET	2G09
78392	BOLT-0.3125 HEX HEAD X0.75LONG	2G07
78401	DRIVE SCREW	2H16
78402	DRIVE SCREW	2H16
78410	POP-RIVET	2G09
78410	RIVET	2H03
78410	POP RIVET	2H05
78410	POP RIVET	2H06
78410	POP-RIVET	2H08
78410	POP RIVET	2H17
78423	SETSCREW	2J13
78553	SCREW 10 UNF X 0.625 LONG	2I03
78555	SCREW(10 ¢UNF X 0.375"LONG)BREATHER	1N04
78586	SCREW 10 UNF X 1.75 ¢LONG	2G05
78593	SCREW	1F10
78593	SCREW 10 UNF X 0.500 LONG	1O12
78664	SPECIAL SCREW 10 UNF X 0.875	1K02
78664	BOLT	1O14
78704	POP RIVET,BAFFLE TO AIR CLEANER	1N04
78704	POP RIVET	2J03
78782	SCREW DRIVE	1F04
78795	SPECIAL SCREW	2G05
78796	SPECIAL SCREW(0.25"UNC X 0.5")	2G05
78832	SCREW	2H15
78861	DRIVE SCREW	1F10
78862	DRIVE SCREW	1F02
78862	SCREW	1F10
78867	POP-RIVET	2G15
78867	POP RIVET	2G17
78885	POP RIVET	2H03
78885	POP RIVET	2H06
78885	POP RIVET	2H08
78898	SCREW 0.250 UNF X 0.625"	2F06
78899	SPECIAL NUT 0.250"UNF	2C09
78900	BOLT	1G04
78900	PAINT REMOVING SCREW	1L06
78900	BOLT	2H02
78905	SCREW	1L06
78905	SCREW	2L12
78924	SET SCREW	2F08
78925	POP RIVET 0.15625 X 0.234375	2G09
78929	SCREW-MUSH HD	1L07

PART NUMBER	DESCRIPTION	REF.NO.
78929	SCREW	1L11
78929	SCREW	1L13
78929	SCREW	1N17
78929	SCREW	2L12
78977	SCREW	2G12
79027	TAPTITE SCREW	2E10
79027	SCREW	2E12
79027	SCREW-0.375"LONG X NO.6	2E14
79027	SCREW	2E16
79048	SPECIAL BOLT MUSH HEAD	2G10
79051	SPECIAL NUT EXPANSION TYPE	2G07
79078	DRIVE SCREW NO 10X1 ¢LONG	2F07
79103	NUT SERT 0.3125 UNF	1N10
79103	NUTSERT 0.3125" UNF	2G09
79106	RIVET FIXING AIR FLOW DIVIDER	2G09
79121	CLIP SINGLE	1N12
79123	CLIP-SINGLE	1G04
79123	CLIP SINGLE	1N12
79125	CLIP-BRAKE PIPES TO CHASSIS	1L07
79125	CLIP FIXING BRAKE PIPES TO	1L07
79125	PIPE CLIP	1L11
79134	SCREW	2K05
79154	SCREW	2I04
79174	DRIVE SCREW 10 ¢UNC X 1.125 LONG	2F09
79175	SPIRE NUT	2G13
79194	POP RIVET	2G13
79203	SET SCREW 0.312 ¢UNF X 1.125 LONG	2H02
79221	SCREW FOR DOOR HINGE	2G16
79225	SCREW 0.3125 UNF X 3.25 LONG	2G18
79227	SCREW 0.3125 UNF X 3.75 LONG	2G18
79239	NUTSERT 10 IN UNF	1N17
79239	SPECIAL NUT	1O14
79239	NUTSERT	2F09
79239	SPIRE NUT	2G05
79239	CAPTIVE NUT NO 10 UNF	2J03
79239	NUTSERT	2L15
79240	NUTSERT	1N08
79240	NUTSERT 0.25 UNF	1N09
79240	NUTSERT 0.25" UNF	2G09
79240	NUTSERT	2G10
79240	NUTSERT	2H14
79240	NUTSERT	2L15
79246	SPECIAL NUT	2G08
79246	SPIRE NUT	2G10
79246	SPIRE NUT	2G11

PART NUMBER		DESCRIPTION	REF.NO.
79246		SPIRE NUT	2G17
79246		SPIRE NUT	2H04
79246		SPIRE CLIP	2H07
79246		SPIRE NUT	2H07
79281		SCREW	2H14
79283		PIN	2H02
79283		PIN	2H04
79283		PIN	2H07
79289		COLLAR	2H02
79289		NUTSERT	2H04
79289		NUTSERT	2H07
79293		PIN	2H02
79293		PIN	2H04
79305		POP RIVET 0.187 ¢DIA X 075 LONG	2H17
79310		SCREW 0.25 UNF X 0.875 LONG	2I03
91414		GREY FELT	2L07
91878		COTTON WEBBING	2L07
91950		LEATHER CLOTH	2L07
92088		COTTON WEBBING	2L07
92462		LEATHER CLOTH OATMEAL 50"WIDE	2L07
92527		BLACK COATED PVC STRIP	2J03
92616		LEATHER CLOTH BLACK 50"WIDE	2L07
108771		RETAINER	1N06
132852		LIGHTING SWITCH	2F09
134176		BALLAST RESISTOR	2F09
137747	1	RELAY	2F13
137747	1	RELAY FOR SERV BRAKE CHECK	2L13
139082		ADAPTOR	1G04
148876		VOLTAGE REGULATOR FOR INSTRUMENTS	2F08
150844		MOUNTING PAD	2F06
154545		PLUG-VALVE ROCKER SHAFT	1F05
158554	L	END CAP	2K14
158554	L	END CAP	2L15
160108		NUT	1F08
160108		LOCKNUT EGR VALVE TO DAMPER	2L12
210492		CORE PLUG	1D11
211502		SEAL	1H08
212160		CAP	1D07
212161		CIRCLIP	1D07
212309		BUSH	1D05
212919		SPRING-WHEEL CYLINDER-BRAKE	1L04
212919		SPRING FOR PISTON	1L02
213340		OIL SEAL	1K05
213358		GASKET	2C03
213358		GASKET-EXHAUST PIPE	2C04

PART NUMBER	DESCRIPTION	REF.NO.
213358	JOINT WASHER-EXHAUST PIPE	2C05
213700	DOWEL	1C02
213700	DOWEL	1C11
213700	DOWEL	1E02
213700	DOWEL	1H03
213959	WSHR FOR RADIATOR DRAIN PLUG	2D02
213961	JOINT WASHER	1F03
214058	JOINT WASHER	1D09
214229	GROMMET-RUBBER	1M05
214649	RUBBER COVER	1K06
214649	SEAL-STEERING BALL JOINT	1K07
214649	RUBBER COVER	1K08
214662	RETAINER	1K06
214662	RETAINER-STEERING BALL JOINT	1K07
214662	RETAINER	1K08
214685	SPRING RING	1K06
214685	SPRING-STEERING BALL JOINTS	1K07
214685	SPRING RING	1K08
214795	CIRCLIP	1H04
214795	CIRCLIP	1I06
214965	CIRCLIP	1H09
214995	BUSH OIL PUMP	1C04
214995	BUSH-OIL PUMP GEAR	1D05
214995	BUSH-OIL GEAR PUMP	1E04
215170	BOLT(0.3125" BSF X 1.59375")	1H09
215331	BOLT(0.375" BSF X 1.59375")	1J10
215331	BOLT	1J11
215331	BOLT	1J13
215599	BOLT 0.25 WHIT X 1.25 LONG	1H03
215703	BOLT (0.375" WHIT X 1")	2E08
215808	CLEVIS COMPLETE	1H12
215809	CLEVIS COMPLETE	1L05
216421	PIN-CLEVIS-TRANSMISSION BRAKE	1L05
216421	CLEVIS PIN	1L15
216708	CLIP	1N11
216708	CLIP-PIPE	1N12
216912	NUT	1G04
216914	WASHER	1G05
216962	CIRCLIP	1I11
217268	BEARING FOR SWIVEL PIN	1J06
217325	BEARING-BALL	1H10
217325	BEARING-BALL	1I10
217352	KEY WASHER	1J10
217352	KEY WASHER	1J11
217352	WASHER-LOCK	1J13

PART NUMBER	DESCRIPTION	REF.NO.
217353	LOCKER	1J10
217353	LOCKER	1J11
217353	WASHER-LOCK	1J13
217400	OIL SEAL	1J02
217400	SEAL-OIL	1J03
217445	SPRING	1H13
217476	LOCKER	1H04
217477	NUT	1H04
217478	BEARING	1H09
217484	PLATE	1H07
217490	BEARING	1H07
217523	PLATE	1H09
217525	CIRCLIP	1H09
217546	CIRCLIP	1H08
217564	BOLT 0.3125 BSF X 1 LONG	1H08
217564	BOLT	1H11
217564	BOLT	1H13
217568	RETAINER	1H08
217620	SHIM	1H09
217622	SHIM	1H09
217694	FLANGE PLATE	1K05
217778	STUD-GEARBOX TRANSFER CASING	1H09
217970	PLATE	1H09
217977	STUD	1H09
217978	STUD	1H09
217978	STUD	1H10
217985	FELT RING	1L14
217985	SEAL-HANDBRAKE CROSS SHAFT	1L15
218243	HIGH GEAR WHEEL	1H07
218244	MAINSHAFT GEAR	1H04
218386	BUSH	1L15
218453	CROSSMEMBER	2G02
218508	STARTING HANDLE	2L11
218983	SPRING,PULL OFF	1L04
218983	BRAKE SHOE RETURN SPRING	1L02
219098	HUB CAP	1J10
219098	HUB CAP	1J11
219098	CAP-HUB	1J13
219521	KNOB	1H13
219676	CLIP-PIPE	1I05
219680	GROMMET	1N17
219680	GROMMET	2L14
219704	TOOL ROLL	2L11
219709	BRACKET	1H13
219714	LEVER HOUSING	1H11

PART NUMBER	DESCRIPTION	REF.NO.
219721	SEAT	1H11
219722	PLATE	1H11
219723	SPRING	1H11
219797	CIRCLIP	1H11
230034	BUSH	1D07
230062	WASHER	1D11
230086	BUSH	1H12
230140	JOINT WASHER	1H09
230250	CORE PLUG	1C11
230250	CORE PLUG	1D11
230250	CUP PLUG	1E11
230251	CORE PLUG	1D11
230279	PIN	1H12
230294	RETAINER FOR SEAL	1K05
230313	KEY	1C05
230313	KEY-WOODRUFF	1D06
230313	KEY-WOODFUFF	1E05
230511	JOINT WASHER FOR DRAIN PLUG	1J06
230696	HOUSING ASSEMBLY	1H09
230736	SPANNER	2L11
230759	SPRING	1K05
230760	WASHER	1K05
230939	LEVER	1009
231033	SCREW-STOP	1H11
231116	SPRING FOR REVERSE STOP	1H11
231190	CHAIN	1N14
231190	CHAIN	1N15
231190	CHAIN	1N16
231190	CHAIN-FUEL FILLER CAP	1N17
231218	COVER	1D03
231219	JOINT WASHER	1D03
231318	PIN	1L14
231341	STUD	1H03
231343	SETSCREW	1D07
231344	SPACER	1D07
231348	ROCKER SHAFT	1D07
231349	ROCKER SHAFT	1D07
231352	WASHER SPRING	1D07
231393	RETURN SPRING-ACCELERATOR	1011
231505	JOINT WASHER FOR HUB	1J10
231505	JOINT WASHER FOR HUB	1J11
231505	GASKET-REAR HUB	1J13
231576	WASHER JOINT	1C13
231576	JOINT WASHER	1D12
231576	WASHER	1N10

PART NUMBER	DESCRIPTION	REF.NO.
231576	JOINT WASHER	2L15
231577	JOINT WASHER	1C11
231577	WASHER JOINT ROCKER SHAFT	1D08
231577	WASHER-OIL PIPE	1D11
231601	WHEEL-ROAD	1J18
232037	SEALING WASHER	1C11
232037	SEALING WASHER	1C12
232037	WASHER JOINT	1D11
232037	JOINT WASHER	1D12
232037	JOINT WASHER	1E12
232038	WASHER-PLAIN	1I03
232038	JOINT WASHER	2G10
232039	JOINT WASHER	1C11
232039	WASHER JOINT	1C12
232039	WASHER-OIL PIPE	1D11
232039	JOINT WASHER	1E11
232039	WASHER JOINTT	1E12
232039	JOINT WASHER	1E12
232040	WASHER JOINT	1D08
232041	JOINT WASHER	1D13
232042	JOINT WASHER	1E07
232042	JOINT WASHER	1E08
232043	JOINT WASHER	1E07
232043	JOINT WASHER	1E08
232043	JOINT WASHER	1F06
232043	SEALING WASHER	1F07
232044	WASHER	1C04
232044	WASHER JOINT	1C14
232044	JOINT WASHER	1E04
232044	WASHER-SEALING-CARBURETTER-	2L12
232074	SPRING POST	1L04
232074	SPRING POST	1L02
232413	JOINT WASHER FOR HOUSING	1J05
232415	OIL THROWER	1H04
232464	PIN	1H12
232497	STUD	1H09
232538	BOLT	2G04
232565	RETAINING PLATE	1H08
232566	RETAINING PLATE	2F08
232590	BULB	2F08
232608	PLATE	1H11
232813	KNOB	1H12
232846	THRUST BUTTON-SPEEDO CABLE	1H09
233220	JOINT-WASHER	1G04
233220	JOINT WASHER	1G05

PART NUMBER	DESCRIPTION	REF.NO.
233220	GASKET-MASTER CYLINDER	1L12
233220	WASHER	1L09
233241	LOCKING DOG	1H10
233243	RUBBER GROMMET	2F06
233243	GROMMET-RUBBER-BLACK	2L09
233244	GROMMET-RUBBER-BLACK	2L09
233246	GROMMET	1I13
233326	SPRING-CHAIN TENSIONER	1C04
233326	SPRING-TIMING CHAIN TENSION	1E05
233328	CIRCLIP	1C04
233328	RETAINER	1E05
233398	SHAFT	1H13
233406	SELECTOR SHAFT BLOCK	1H12
233406	BLOCK-TRANSFER SHAFT	1H13
233407	COUPLING	1H12
233409	SHOULDERED PIN	1H12
233409	PIN	1H13
233416	SHAFT	1H12
233419	'O'RING-VALVE	1D07
233419	RUBBER RING	1D11
233437	BUSH	1H13
233438	TUBE	1H13
233441	PLUG	1H13
233449	SPRING	1H12
233520	BANJO BOLT	1D11
233770	CLIP	2L08
234124	BUSH-TIMING PINION	1C04
234124	BUSH-TIMING CHAIN WHEEL	1E05
234532	NIPPLE	1J02
234532	NIPPLE-GREASE	1J03
234532	NIPPLE GREASE	1J14
234603	BOLT (2 BA X 0.50")	1L07
234603	BOLT (2 BA X 0.50")	1L07
234603	BOLT	1L09
234603	BOLT	1L10
234603	BOLT	1L11
234603	BOLT	1L12
234603	BOLT	1L13
234603	BOLT	1N13
234603	BOLT	1N13
234603	BOLT	2F10
234603	BOLT	2G08
234603	BOLT	2G09
234603	SCREW	2L14
234658	COLLAR	1H12

PART NUMBER	DESCRIPTION	REF.NO.
234889	SPRING	1L03
235113	GROMMET-(BREATHER TO	1J02
235113	GROMMET-(BREATHER TO	1J03
235113	GROMMET	2F04
235416	PLUNGER	1H13
235455	SHIM	1H09
235592	PLUG	1H09
235592	PLUG-OIL DRAIN-AXLE	1J02
235592	PLUG-AXLE-DRAIN	1J03
235592	PLUG-OIL DRAIN-AXLE	1J12
235592	PLUG-DRAIN-FUEL TANK	1O02
235592	PLUG-FUEL TANK DRAIN	1O04
235770	KEY	1C03
235770	KEY WOOD RUFF	1E03
235968	RETAINER FOR OIL SEAL	1J05
236022	JOINT WASHER	1C11
236022	WASHER-THERMOSTAT SWITCH	1D11
236022	GASKET-OIL TEMP SWITCH	1F06
236067	IDLER WHEEL	1C04
236067	WHEEL-TIMING CHAIN	1E05
236070	DRAIN PLUG	1J06
236072	MUDSHIELD-DIFFERENTIAL HSG	1J07
236074	MUDSHIELD	1H08
236074	EXCLUDER-MUD	1H10
236257	DOWEL	1D05
236257	DOWEL	1E04
236305	SEAL	1H04
236357	DOWEL	1C04
236365	CLIP	2L08
236366	CLIP	2F04
236366	CLIP-DOUBLE	2L08
236407	UNION NUT	1D08
236408	OLIVE	1D08
236541	RETAINER	1H10
236548	MUDSHIELD	1H10
236630	FLANGE	1H08
236632	MUDSHIELD	1J07
236658	PEDAL SHAFT	1O07
236658	SHAFT-ACCELERATOR PEDAL	1O11
236665	ACCELERATOR SHAFT BRACKET	1O07
236891	BOWL	1N06
236993	ANCHOR	1L04
236993	ANCHOR FOR BRAKE SHOE	1L02
236995	LOCKING PLATE	1L04
236995	LOCKING PLATE	1L02

PART NUMBER	DESCRIPTION	REF.NO.
236998	ACCELERATOR SHAFT BRACKET	1007
236998	BRACKET-ACCELERATOR SHAFT	1011
237100	CHECK STRAP	2G02
237119	SET BOLT (2 BA X 0.375")	1C11
237121	BOLT 2BA X 0.625 LONG	1N11
237121	BOLT	1N12
237121	BOLT	1N13
237121	BOLT	1N13
237251	STUD	1H09
237324	BOLT(0.3125" BSF X 0.875")	1G02
237339	BOLT(0.375" BSF X 1")	1J08
237339	BOLT	1L02
237339	BOLT	1L03
237357	SET BOLT(0.4375" BSF X 1.375")	1J06
238180	RELAY LEVER ASSY	1L15
238329	LINK	1H13
238542	SPECIAL SCREW	1L04
238542	SPECIAL SCREW	1L02
238793	BEARING	1010
238871	RETAINING PLATE	1D07
239449	BRACKET	1D03
239600	CLIP-LH ADAPTOR	1M11
239600	CLIP	2L12
239600	CLIP	2L08
239673	CLIP	1014
239688	LEAD	2F10
239688	LEAD-EARTH-WIPER MOTOR	2F11
239710	PLATE-EXHAUST MTG TO PIPE	2C04
239710	PLATE-EXHAUST MOUNTING TO PIPE	2C05
239710	PLATE-EXHAUST MOUNTING TO PIPE	2C07
239710	PLATE-EXHAUST MOUNTING TO PIPE	2C08
239710	PLATE-EXHAUST MOUNTING TO PIPE	2C10
239711	CLIP-EXHAUST MOUNTING	2C03
239711	CLIP-EXHAUST MOUNTING	2C04
239711	CLIP-EXHAUST MOUNTING	2C05
239712	CLAMP	2C06
239715	RETAINER-EXHAUST MOUNTING	2C03
239715	RETAINER-EXHAUST MOUNTING	2C04
239715	CLAMP PLATE	2C05
239715	RETAINER-EXHAUST MOUNTING	2C06
239715	RETAINER-EXHAUST MOUNTING	2C07
239715	RETAINER-EXHAUST MOUNTING	2C08
239715	RETAINER-EXHAUST-MOUNTING	2C10
239715	CLAMP PLATE	2C11
239716	BRACKET	2C06

PART NUMBER	DESCRIPTION	REF.NO.
240087	CLIP-EXHAUST MOUNTING	2C06
240407	CLIP-PIPE	1H09
240407	CLIP	2L08
240417	CLIP	2L08
240428	CABLE CLIP	1M08
240429	CLEAT	1O13
240429	CLEAT-(BREATHER TO BRAKE PIPE)	1J12
240429	CABLE CLIP	1M08
240429	CLIP-FIRTREE	2F06
240429	CLIP-FIRTREE	2F12
240429	CLEAT	2F15
240429	CLIP-FIRTREE	2L08
240429	CLIP-FIRTREE	2L13
240429	CLEAT-EARTH LEAD TO WATER	2L17
240429	CLEAT FIXING PIPES	2L17
240431	CLEAT	1N05
240431	CLIP-FIRTREE	2L08
240555	DRIVERGEAR-OIL PUMP	1C04
240555	GEAR-OIL PUMP	1D05
240555	GEAR-OIL PUMP	1E04
240708	RETAINER-CLUTCH SPRING	1G04
240708	PLATE-ANCHOR-BRAKE SPRING	2L12
240708	ANCHOR FOR SPRING	1L15
240836	SCREW DRIVER	2L11
241283	ROAD SPRING	1J15
241380	BUMP RUBBER	2G02
241388	THRUST WASHER	1K05
241598	PLATE	1H11
241839	LOCKER	1H09
242127	U BOLT	1J17
242139	RING,LIFTING AND TOWING	2G04
242139	TOWING RING	2G12
242520	STUB SHAFT	1J05
242522	CIRCLIP	1J02
242522	CIRCLIP	1J03
242522	CIRCLIP	1J04
242522	CIRCLIP	1J05
242522	CIRCLIP	1J14
242863	ROAD SPRING	1J15
243022	WASHER-PLAIN	1J16
243095	GREASE CAP	2E07
243095	CAP-STARTER MOTOR END	2E08
243121	MAIN LEAF FRONT SPRING	1J15
243121	LEAF-MAIN-ROAD SPRING	1J16
243123	MAIN LEAF	1J17

PART NUMBER	DESCRIPTION	REF.NO.
243124	2ND LEAF	1J17
243126	2ND LEAF	1J15
243126	LEAF-2ND-ROAD SPRING	1J16
243130	DOWEL	1J17
243131	DOWEL	1J15
243296	WHEEL CYLINDER	1L02
243296	CYLINDER RH WHEEL-REAR BRAKE	1L04
243297	WHEEL CYLINDER	1L02
243297	CYLINDER LH WHEEL-REAR BRAKE	1L04
243302	WHEEL CYLINDER	1L02
243303	WHEEL CYLINDER	1L02
243395	CLIP	1L11
243395	CLIP	1L13
243395	CLIP	1N13
243395	CLIP	1N13
243395	CLIP	2L12
243611	SHAFT	1H10
243618	STUD	2K06
243714	SPRING	1H13
243743	WHEEL CYLINDER	1L03
243744	WHEEL CYLINDER	1L03
243873	OIL THROWER	1H10
243958	JOINT WASHER	1C02
243958	WASHER JOINT	1C08
243958	WASHER JOINT	1C09
243958	WASHER	1C13
243958	WASHER JOINT	1D11
243958	JOINT WASHER	1E02
243958	JOINT WASHER	1F05
243958	WASHER-PLAIN	1L07
243958	JOINT WASHER-DRAIN PLUG	1002
243958	JOINT WASHER-DRAIN PLUG-FUEL TANK	1003
243958	JOINT WASHER-FUEL TANK DRAIN PLUG	1004
243958	JOINT WASHER-DRAIN PLUG-TANK	1006
243959	JOINT WASHER	1C02
243959	WASHER-OIL DRAIN PLUG	1C07
243959	JOINT WASHER	1C10
243959	JOINT WASHER	1C11
243959	WASHER JOINT	1D07
243959	WASHER JOINT	1D08
243959	JOINT WASHER	1E02
243959	JOINT WASHER	1E07
243959	JOINT WASHER	1E08
243959	JOINT WASHER	1E10
243959	JOINT WASHER	1E11

PART NUMBER	DESCRIPTION	REF.NO.
243967	JOINT WASHER	1F05
243968	JOINT WASHER	1C02
243968	JOINT WASHER	1E02
243968	JOINT WASHER	1F05
243969	JOINT WASHER	1D10
243970	WASHER	1D03
243971	JOINT WASHER	1D05
243972	WASHER JOINT	1D11
243972	JOINT WASHER	1E11
244009	DISTANCE PIECE-EXHAUST MOUNTING	2C03
244009	DISTANCE PIECE-EXHAUST MTG	2C04
244009	DISTANCE PIECE	2C05
244009	DISTANCE PIECE-EXHAUST MOUNTING	2C06
244009	DISTANCE PIECE-EXHAUST MOUNTING	2C07
244009	DISTANCE PIECE-EXHAUST MOUNTING	2C08
244009	DISTANCE PIECE-EXHAUST MOUNTING	2C10
244009	DISTANCE PIECE	2C11
244150	BEARING FOR HALFSHAFT	1J05
244151	DISTANCE PIECE FOR BEARING	1J05
244162	PLATE	1J17
244384	HANDLE-STARTING.	2L11
244449	INTERMEDIATE EX PIPE	2C03
244487	LOCKWASHER	1C04
244487	WASHER-LOCK	1E04
244488	SEALING RING	1C04
244488	'O'RING-OIL PUMP STRAINER	1E04
244706	BRACKET	2E07
244706	BRACKET-END-STARTER MOTOR	2E08
244711	PINION & SLEEVE	2E07
244711	PINION-STARTER MOTOR	2E08
244713	BRACKET FOR STARTER MOTOR	2E07
244714	BUSH	2E07
244714	BUSH-STARTER MOTOR PINION	2E08
244718	SUNDRY PARTS KIT	2E07
244718	KIT-SUNDRY PARTS-STARTER	2E08
245003	CLAMPING PLATE	2E03
245014	DOG-DISTRIBUTOR DRIVING	2E04
245599	ATTACHMENT PLATE	2L02
245857	RETAINING PLATE-DISTRIBUTOR	2E04
245857	RETAINER PLATE DISTRIBUTOR	2E05
245926	RETAINER-EXHAUST MOUNTING	2C06
245926	RETAINER-EXHAUST MOUNTING	2C07
245926	RETAINER-EXHAUST MOUNTING	2C10
245926	PACKING PIECE	2C11
245940	PLUNGER	1D05

PART NUMBER	DESCRIPTION	REF.NO.
246109	TOWING HOOK	2L02
246169	SEAL RING	1G02
246169	'O'RING-FLYWHEEL HOUSING	1G03
246464	DOWEL	1C03
246464	DOWEL	1D04
246464	DOWEL	1E03
246565	ANCHOR PLATE	1L03
246566	ANCHOR PLATE	1L03
247040	SPRING	1C06
247040	SPRING-LOCKERS	1E06
247051	BOLT (0.50" UNF X 4.5625")	1C11
247051	BOLT-SPECIAL	1E11
247070	JOINT WASHER FOR COVER	1C05
247070	JOINT WASHER-CAMSHAFT COVER	1E05
247078	SPECIAL SET BOLT	1C10
247078	BOLT	1D09
247078	BOLT-SPECIAL	1E09
247121	SPECIAL NUT	1C11
247121	SPECIAL NUT	1C12
247121	DOME NUT	1E12
247127	PLUG	1C02
247127	SCREW-SPECIAL	1E02
247135	BOLT(0.4375" UNF X 0.875")	1G02
247135	BOLT	1G03
247143	STUD	1E11
247144	STUD	1C04
247144	STUD	1C11
247144	STUD	1E05
247144	STUD	1E11
247145	STUD	1G02
247145	STUD	1G03
247146	STUD	1G03
247153	WASHER	1E06
247179	JOINT WASHER	1N10
247199	SPECIAL BOLT	1C04
247199	BOLT-SPECIAL	1E05
247212	JOINT WASHER-DISTRIBUTOR PUMP	1N10
247212	JOINT WASHER	2E02
247212	WASHER JOINT	2E03
247554	JOINT WASHER	1E09
247554	JOINT WASHER	1C08
247555	JOINT WASHER	1E09
247555	JOINT WASHER	1C08
247583	BUSH	1E03
247606	ROCKER COVER GASKET	1E12

PART NUMBER	DESCRIPTION	REF.NO.
247607	STUD FOR ROCKER SHAFT	1E06
247614	BUSH VALVE ROCKER	1C06
247624	COVER-RUBBER WASHER	1C11
247624	COVER FOR RUBBER WASHER	1C12
247631	ENGINE BREATHER FILTER	1C11
247634	TAPPET CLEARANCE PLATE	1C11
247634	TAPPET CLEARANCE PLATE	1C12
247634	PLATE-VALVE CLEARANCE	1E12
247653	BUSH	1E04
247665	LOCKWASHER	1C04
247665	WASHER-LOCK	1E04
247683	BOLT	1E11
247709	CAMSHAFT	1C05
247723	BOLT	1E11
247726	NOZZLE	1N10
247737	BUSH	1E06
247738	BUSH	1E06
247742	CIRCLIP	1C04
247742	CIRCLIP	1E04
247755	SET BOLT(0.5625" UNF X 3.25")	1C02
247755	SET BOLT	1E02
247766	MUD EXCLUDER	1C07
247766	EXCLUDER-MUD	1E08
247766	DEFLECTOR-FRONT COVER	1F04
247802	JOINT WASHER	1N10
247824	JOINT WASHER	1C13
247861	PLUG	1C02
247861	SCREW-SPECIAL	1E02
247874	JOINT WASHER	1C10
247874	GASKET-THERMOSTAT HOUSING	1E10
247912	PISTON ASSEMBLY-TIMING CHAIN	1C04
247912	PISTON CHAIN ADJUSTER	1E05
247952	LEAD	1E11
247953	LEAD	1E11
247965	PLUG	1C02
247965	DOWEL	1E02
248720	BOLT(0.50" BSF X 2")	1H02
250053	WING NUT 0.375 UNF	2H02
250053	WING NUT	2H05
250053	WING NUT	2H12
250431	WING NUT	2G04
250543	BOLT	2E08
250544	BOLT(0.375" BSF 1.75")	1H09
250551	BOLT(0.375" BSF X 3.50")	1J15
250551	BOLT	1J16

PART NUMBER	DESCRIPTION	REF.NO.
250551	BOLT	1J17
250551	BOLT	1J18
250693	BOLT(0.25" BSF X 0.625")	1J05
250830	CORE PLUG	1E11
250962	BOLT (2BA X 0.875")	1O14
251002	SET BOLT (2BA X 0.4375")	1C11
251002	BOLT	1D11
251018	BOLT (2BA X 0.5625")	1H10
251018	BOLT	2L12
251321	SELF LOCKING NUT(0.3125 BSF)	1H03
251322	NUT-SELF LOCKING	1C14
251322	NUT-SELF LOCKING	1D15
251322	NUT(0.375 BSF)	1J05
251322	NUT-SELF-LOCKING	1L02
251322	NUT	1L04
251323	NUT(0.4375" BSF)	1J15
251323	NUT-SELF LOCKING	1J17
251324	NUT(0.50" BSF)	1H02
251335	NUT (2BA)	1H10
251335	NUT	2L12
251601	NUT(0.3125" BSF)	1H12
251601	NUT-CASTLE	1H13
252163	SELF LOCKING NUT 0.4375 UNF	1D11
252163	NUT	1J16
252165	NUT(0.5625" UNF)	1J15
252165	NUT-SELF LOCKING	1J16
252165	NUT-SELF LOCKING	1J16
252165	NUT-SELF LOCKING	1J17
252165	NUT-SELF LOCKING	1J18
252165	NUT-SELF LOCKING	1J18
252180	WING NUT	2G04
252211	NUT	1G04
252496	STUD	1D12
252501	STUD	1D11
252513	STUD	1F02
252514	STUD	1C08
252514	STUD	1C09
252514	STUD	1F06
252514	STUD	1M04
252515	STUD	1D11
252516	STUD	1F10
252516	STUD	1F11
252516	STUD	2E16
252621	STUD	1C02
252621	STUD	1D03

PART NUMBER	DESCRIPTION	REF.NO.
252621	STUD	1E02
252621	STUD	1E13
252622	STUD	1D03
252623	STUD	1F08
252626	STUD	1D03
252626	STUD MANIFOLD AND EXHAUST	2L17
252627	STUD	1D03
253003	SET BOLT	1D11
253028	BOLT 0.3125 UNC X 1 LONG	1G05
253067	BOLT	1F02
253205	BOLT	1D14
253205	BOLT	1O10
253205	BOLT (0.250"UNC X 0.562")	2E02
253205	BOLT	2E03
253205	BOLT	2E04
253205	BOLT	2E05
253205	BOLT(0.25"UNC X 0.5625"¢LONG)	2L17
253206	SET BOLT	1C08
253206	BOLT	1F04
253206	BOLT	1F06
253206	BOLT	1F11
253206	BOLT	1M09
253826	BOLT	1J16
253830	BOLT	1J17
253905	BOLT (0.375" UNF X 0.625")	1E11
253960	BOLT 0.312"UNF X 2.375 LONG	2E13
254810	NUT	1G04
254824	NUT	1J16
254824	NUT	1J18
254831	NUT	1G05
254862	NUT	1G05
254862	NUT(0.375" UNF)	1H13
255029	BOLT	1G04
255202	BOLT	1F02
255202	BOLT	1G04
255202	BOLT(0.25" UNF X 0.375")	1L06
255204	BOLT	1D06
255204	BOLT	1E05
255204	BOLT	1O07
255204	BOLT	1O09
255204	BOLT	1O11
255204	BOLT	2C09
255204	BOLT	2G08
255204	BOLT	2K06
255205	BOLT(0.25" UNF X 0.5625")	1N13

PART NUMBER	DESCRIPTION	REF.NO.
255205	BOLT(0.25" UNF X 0.5625")	1N13
255205	BOLT	2C09
255205	BOLT	2K02
255205	BOLT	2K03
255206	BOLT	1D03
255206	BOLT	1D06
255206	BOLT	1K05
255206	BOLT	1L07
255206	BOLT	1M04
255206	BOLT	1N07
255206	BOLT	1N08
255206	BOLT	1N09
255206	BOLT	1N11
255206	BOLT	1N12
255206	BOLT	1N13
255206	BOLT	1N13
255206	BOLT	1007
255206	BOLT	1009
255206	BOLT	1010
255206	BOLT	1011
255206	BOLT	2C09
255206	BOLT	2D02
255206	BOLT	2G02
255206	BOLT	2G04
255206	BOLT	2G06
255206	BOLT	2G07
255206	BOLT	2G08
255206	BOLT	2G10
255206	BOLT	2G12
255206	BOLT	2G13
255206	BOLT	2G15
255206	BOLT	2H02
255206	BOLT	2H03
255206	BOLT	2H04
255206	BOLT	2H05
255206	BOLT	2H06
255206	BOLT	2H07
255206	BOLT	2H08
255206	SCREW	2H14
255206	BOLT	2H15
255206	BOLT	2H18
255206	BOLT	2K02
255206	BOLT	2K04
255206	BOLT	2K05
255206	BOLT	2K06

PART NUMBER	DESCRIPTION	REF.NO.
255206	BOLT	2L15
255207	BOLT	1C08
255207	BOLT (0.25" UNF X 0.75")	1C10
255207	BOLT	1E09
255207	BOLT	1N09
255207	BOLT	1007
255207	BOLT	1011
255207	BOLT	2F09
255207	BOLT	2F12
255207	BOLT	2G02
255207	BOLT	2G06
255207	BOLT	2G07
255207	BOLT	2G13
255207	BOLT	2G15
255207	BOLT	2G16
255207	BOLT	2G18
255207	BOLT	2H02
255207	BOLT	2H04
255207	BOLT	2H08
255207	BOLT	2H15
255207	BOLT	2H17
255207	BOLT	2H18
255207	BOLT	2J09
255207	BOLT	2J16
255208	BOLT	1D10
255208	BOLT	1N07
255209	BOLT	1G04
255211	BOLT(0.250" UNF X 1.250")	1009
255227	BOLT	1D05
255227	BOLT	1D08
255227	BOLT	1G04
255227	BOLT	1K04
255227	BOLT	1L15
255227	BOLT	1007
255227	BOLT	1009
255227	BOLT	1011
255227	BOLT	2E02
255227	BOLT	2E13
255227	BOLT	2G02
255227	BOLT	2G17
255227	BOLT	2H02
255227	BOLT	2H07
255227	BOLT	2H16
255227	SCREW	2I02
255227	BOLT	2I15

PART NUMBER	DESCRIPTION	REF.NO.
255227	BOLT	2L12
255227	BOLT	2L12
255229	BOLT (0.3125" UNF X 1.125")	2G18
255229	BOLT	2H15
255230	BOLT 0.3125 UNF X 1.25 LONG	2H07
255245	BOLT	1O05
255245	BOLT (0.375"UNF X 0.750")	2C09
255245	BOLT	2C09
255248	BOLT(0.375" UNF X 1.125")	1G02
255249	BOLT(0.375" UNF X 1.25")	1L14
255249	BOLT	2I02
255427	BOLT	1G03
256001	BOLT	1D11
256040	BOLT(0.375" UNF X 1.375")	1G02
256041	BOLT(0.375" UNF X 1.50")	1G02
256093	BOLT 0.50 UNF X 4.50 LONG	1J18
256208	BOLT(0.25"UNF X 2.25")	1D10
256220	BOLT	2G05
256220	BOLT	2H08
256220	BOLT	2I15
256222	BOLT	1G05
256233	BOLT(0.3125" UNF X 3.75")	1C07
256233	BOLT	1C10
256295	BOLT 0.50 UNF X 5" LONG	1J16
257004	BOLT	1E09
257011	NUT	1M12
257015	BOLT 10 UNF X 0.375"	1M07
257015	BOLT	2D04
257015	BOLT	2F09
257015	BOLT	2J06
257015	BOLT	2L15
257015	SCREW(NO.10 ¢UNF X 0.375LONG)	2L17
257017	BOLT	1N17
257017	BOLT (10 UNF X 0.500")	2C09
257017	SCREW	2F13
257017	SCREW	2F14
257017	SCREW	2F15
257017	SCREW	2L15
257019	BOLT	1O14
257019	BOLT 10 UNF X 0.625 LONG	2F12
257020	BOLT	1M12
257020	SCREW NO 10 X 0.750 LONG	2J03
257064	BOLT	1F06
257123	BOLT	1M12
257302	BOLT 10 UNF X 2.125"	2F04

PART NUMBER	DESCRIPTION	REF.NO.
260055	STARTER BRUSHES	2E07
260055	BRUSH-STARTER MOTOR	2E08
261414	SEAL	1N02
261414	GASKET-AIR CLEANER	1N02
261414	GASKET-AIR CLEANER	1N03
261850	BUSH FOR ROCKER SHAFT	1K02
261857	JOINT WASHER	1K02
261869	ROLLER FOR MAIN NUT	1K02
261873	ADJUSTER SCREW	1K02
261874	LOCKNUT	1K02
262703	BUSH AND SPRING	2E02
262703	BRUSH AND SPRING DISTRIBUTOR	2E04
262703	BRUSH/SPRING DISTRIBUTOR CAP	2E05
262703	BRUSH AND SPRING FOR CAP	2L17
262704	ROTOR ARM	2E04
263524	GROMMET	2K14
264024	WASHER-PLAIN	1J16
264024	WASHER-PLAIN	1J17
264195	INTERMEDIATE EX PIPE	2C03
264362	SPRING	2I02
264563	SPRING	1J15
264569	GUDGEON PIN	1D04
264590	BULB	2F03
264590	BULB	2F03
264591	BULB	2F04
264591	BULB	2F05
264591	BULB	2F06
264767	SEALING WASHER	1G04
264782	BULB HOLDER	2F03
264782	CONNECTOR-STOP TAIL LAMP	2F03
264886	BRACKET-EXHAUST MTG TO PIPE	2C04
264889	CLAMP	2C04
265038	BANJO BOLT	1D11
265169	GUDGEON PIN	1C03
265175	CIRCLIP	1C03
265295	ROOF LAMP	2F06
265295	ROOF LAMP	2J06
265295	ROOF LAMP	2J07
265461	DOWEL	1J15
265461	SCREW-ROAD SPRING	1J16
265482	LEAD-ROOF LAMP	2F06
265482	LEAD ROOF LAMP	2J06
265482	LEAD ROOF LAMP	2J07
265601	FLEXIBLE MOUNTING	2C05
265627	SPRING	1J15

PART NUMBER	DESCRIPTION	REF.NO.
265627	SPRING-ROAD-PASSENGER'S	1J16
265779	DOWEL	1C03
265779	DOWEL	1E03
266034	CLAMP PLATE EXHAUST MOUNTING	2C05
266035	DISTANCE PIECE EXHAUST MOUNTING	2C05
266036	DISTANCE PIECE EXHAUST MOUNTING	2C05
266321	VALVE SEAT INSERT	1D11
266662	CAMSHAFT CHAIN	1D06
266684	OVERHAUL KIT-FRONT	2L07
266684	WHEEL CYLINDER KIT	1L03
266687	OVERHAUL KIT-REAR	2L07
266687	WHEEL CYLINDER KIT	1L02
266900	OIL STRAINER	1D05
266945	CIRCLIP	1E03
266956	DUST COVER	1H10
266992	SEAL	1H12
267412	ANCHOR FOR SPRING	1L15
267451	SPRING-CHAIN ADJUSTER	1C04
267451	SPRING-TIMING CHAIN TENSIONER	1E05
267572	THRUST WASHER	1H04
267573	THRUST WASHER	1H04
267574	THRUST WASHER	1H04
267575	THRUST WASHER	1H04
267604	JOINT-WASHER	1F06
267668	GASKET	1D12
267782	JOINT WASHER	1H08
267828	SEALING WASHER	1D08
267828	WASHER-SEALING	1H08
267829	DRIVE SHAFT	1D05
267837	JOINT WASHER	1002
267837	JOINT WASHER-FUEL TANK OUTPUT PIPE	1004
268292	VALVE SPRING CAP	1C06
268292	RETAINER-VALVE COLLET	1D07
268292	RETAINER VALVE SPRING	1E06
268292	CAP-VALVE SPRING	2L12
268293	SPLIT CONE FOR VALVE HALVES	1C06
268293	COLLET-VALVE	1D07
268293	COLLET VALVE	1E06
268293	COTTER HALVES-VALVE SPRINGS	2L12
268791	SLEEVE	1H08
268847	LEVER	1H12
268849	HOUSING	1H10
268883	CLIP	2K14
268887	O RING	1C08
268887	FILTER SEALING RING	1C11

PART NUMBER	DESCRIPTION	REF.NO.
268887	O RING	1D12
268887	SEAL-ENGINE BREATHER	1E12
269132	STOP CLIP	1O07
269132	CLIP-ACCELERATOR LEVER SHAFT	1O11
269132	CLIP-RETAINING ACCELERATOR	1O14
269257	GROMMET FOR SERVO PIPES	2L09
269265	HALFSHAFT COMPLETE FOR	1J05
269266	HALFSHAFT COMPLETE FOR	1J05
269783	BUSH-CLUTCH PEDAL	1G04
269783	DISTANCE PIECE	1L06
269889	RUBBER WASHER	1C12
269889	WASHER	1E12
269889	WASHER-OIL FILTER BOLT	1E12
270225	WASHER-SPRING	2E09
270225	BRUSH SET STARTER MOTOR	2E09
270520	PLATE	1J15
270656	TUBE OF SILICONE GREASE 1OZ	1C03
270656	GREASE SILICONE	1D04
270656	GREASE SILICONE	1E03
271013	'O' RING FOR STEERING BOX	1K02
271014	PLAIN WASHER-STEERING BOX	1K02
271379	JOINT WASHER	1K02
271384	ADJUSTABLE RACE	1K02
271386	PLUG	1K02
271872	ELBOW	1O02
271881	PEG	1E11
272185	BRACKET	1H09
272451	GALLERY PIPE	1D03
272452	WATER PIPE	1D03
272498	ENGINE MOUNTING	1C14
272498	BRACKET-ENGINE MOUNTING	1D15
272498	BRACKET-ENGINE MOUNTING REAR ¢LH	1E13
272501	ENGINE MOUNTING	1C14
272501	BRACKET-ENGINE MOUNTING	1D15
272501	BRACKET-ENGINE MOUNTING REAR ¢RH	1E13
272506	ENGINE MOUNTING	1C14
272506	BRACKET-ENGINE MOUNTING FRONT	1E13
272512	GROMMET-(BREATHER PIPE)	1J12
272512	GROMMET	1N08
272512	GROMMET-FUEL PIPE	1N13
272512	GROMMET-FUEL PIPE	1N13
272539	GASKET-OIL FILTER	1C12
272539	GASKET-OIL FILTER	1E12
272539	O RING	1E12
272596	SEAL	1H11

PART NUMBER	DESCRIPTION	REF.NO.
272597	SEAL	1H11
272632	PEDAL BRACKET	1G04
272712	SPINDLE	1G04
272712	SHAFT PEDAL	1L06
272713	COVER-PEDAL BRACKET	1G04
272713	PEDAL BRACKET COVER	1L06
272713	COVER-TOP PEDAL BRACKET	2L12
272714	BUSH-CLUTCH PEDAL	1G04
272714	BUSH FOR PEDAL	1L06
272749	BOLT	1D03
272804	BRACKET	1013
272804	BRACKET PEDAL SHAFT	1007
272804	BRACKET-ACCELERATOR SHAFT	1009
272804	BRACKET-ACCELERATOR SHAFT	1011
272819	GASKET-PEDAL BRACKET COVER	1G04
272819	GASKET	1L06
272819	GASKET-UPPER BRACKET TOP	2L12
272835	JOINT WASHER	1D09
272922	LOCKER	1J08
272934	BOLT	1J08
273069	SEALING WASHER	1C06
273069	WASHER	1C11
273069	WASHER	1C12
273069	WASHER-SPECIAL	1E06
273069	WASHER-PLAIN	1E12
273069	JOINT WASHER	1N10
273163	BUSH	1D04
273166	PLUG	1C02
273166	PLUG	1E02
273306	ROCKER SHAFT	1D08
273307	ROCKER SHAFT	1D08
273308	SPACING WASHER	1D08
273309	SHIM FOR VALVE ROCKER	1D08
273370	GROMMET-LH ADAPTOR	1M11
273370	GROMMET	1N12
273441	DIFFERENTIAL CASING ASSEMBLY	1J08
273521	BANJO BOLT	1N10
273711	PLUNGER	1C04
273711	PLUNGER OIL RELIEVE VALVE	1E04
273964	BALL END	1010
274084	HOUSING ASSEMBLY	1D05
274086	SPECIAL SCREW	1D05
274089	NUT	1D12
274091	NUT	1D08
274093	BOLT(0.375"UNF X 0.90625")	1D12

PART NUMBER	DESCRIPTION	REF.NO.
274100	PLATE	1D12
274104	JOINT WASHER	1D13
274115	BEARING	1D06
274116	BEARING	1D06
274117	BEARING	1D06
274118	SPECIAL SCREW	1D06
274173	WASHER JOINT	1C11
274173	JOINT WSHR FOR ROCKER COVER	1C12
274423	BRAKE DRUM	1L05
274469	CHECK STRAP	2G02
274609	JOINT WASHER	1D13
274711	CAMSHAFT	1E05
274737	DIST PIECE FOR FAN BLADES	1D10
274772	ROCKER	1E06
274773	ROCKER	1E06
274774	ROCKER	1E06
274775	ROCKER	1E06
274817	WASHER JOINT	1D08
274870	RETAINER-EXHAUST MOUNTING	2C04
274870	RETAINER-EXHAUST MOUNTING	2C06
274870	RETAINER-EXHAUST MOUNTING	2C07
274870	PACKING PIECE	2C11
274928	OIL FEED BOLT	1D05
275199	CLEVIS FORK END	1L15
275234	DAMPER-TIMING CHAIN	1D06
275234	DAMPER-TIMING CHAIN	1E05
275265	JOINT WASHER	1N10
275266	BANJO BOLT	1N10
275324	VIBRATION DAMPER	1C04
275565	JOINT WASHER	1N06
275565	GASKET-FUEL PUMP	1N10
275679	PIPE	1C11
275679	PIPE-ENGINE OIL	1E11
275744	KIT-WHEEL CYLINDER OVERHAUL	1L04
275744	OVERHAUL KIT-FRONT	2L07
275744	WHEEL CYL KIT	1L02
275836	OIL PIPE	1D03
276034	SPRING	1J15
276034	SPRING-ROAD-DRIVER'S	1J16
276054	GROMMET	2L09
276133	CHAINWHEEL	1E05
276141	INTERMEDIATE EXHAUST PIPE	2C04
276322	PLUG SPANNER	2L11
276323	PLUG SPANNER EXTENSION	2L11
276396	SPANNER	2L11

PART NUMBER	DESCRIPTION	REF.NO.
276397	SPANNER	2L11
276482	CASTLE NUT(0.4375 UNF)	1K06
276482	NUT-CASTELLED	1K07
276484	RUBBER GROMMET	1J02
276510	JOINT WASHER	1D11
276511	BRACKET	1G02
276511	BRACKET-FLYWHEEL PLUG	1G03
276541	SEALING RING	1D06
276719	HALFSHAFT ONLY RH	1J05
276720	HALFSHAFT LH	1J05
276784	STEERING TUBE	1K06
276784	TUBE-LONGTITUDINAL-	1K07
277103	HOUSING FOR ACCELERATOR	1007
277103	BRKT-ACCELERATOR PDAL SHAFT	1011
277120	BUSH	1008
277153	PEDAL SHAFT	1007
277153	SHAFT-ACCELERATOR PEDAL	1009
277153	SHAFT-ACCELERATOR PEDAL	1011
277217	SPANNER	2L11
277259	FILLER TUBE COMPLETE	1N14
277259	FILLER TUBE COMPLETE	1N15
277259	FILLER TUBE COMPLETE	1N16
277260	CAP FOR FUEL FILLER	1N14
277260	CAP FOR FUEL FILLER	1N15
277260	CAP FOR FUEL FILLER	1N16
277261	TUBE	1N14
277261	TUBE	1N15
277261	TUBE	1N16
277262	TUBE	1N14
277262	TUBE	1N15
277262	TUBE	1N16
277289	GASKET FOR SWIVEL PIN HOUSING	1J06
277311	LOCKER-BRAKE BACKPLATE	1L02
277311	LOCKER-BRAKE BACKPLATE	1L03
277320	SPANNER	2L11
277388	CYLINDER-CHAIN ADJUSTER	1C04
277388	CYLINDER-TIMING CHAIN	1E05
277453	BUSH	1012
277454	PIN-BELL CRANK	1012
277455	RETURN SPRING	1007
277455	SPRING-ACCELERATOR RETURN	1010
277455	SPRING-ACCELERATOR PEDAL	1011
277473	LEVER-ACCELERATOR SHAFT	1011
277475	ACCELERATOR LEVER	1007
277475	LEVER-ACCELERATOR LINKAGE	1010

PART NUMBER	DESCRIPTION	REF.NO.
277475	LEVER-ACCELERATOR	1O11
277502	SPRING	1O13
277502	SPRING	1O12
277532	STUD	1G03
277565	ANCHOR	1O12
277778	NUT	1O12
277840	SUPPORT BRACKET RESERVOIR TANK	1G04
277956	DOWEL	1C06
277956	DOWEL	1E06
278010	CLIP PIPE	1F06
278109	IDLER GEAR-OIL PUMP	1C04
278109	GEAR-OIL PUMP	1D05
278109	GEAR-OIL PUMP	1E04
278161	LINER	1C13
278162	PACKING	1M04
278163	WASHER JOINT	1C08
278163	WASHER JOINT	1C09
278163	JOINT WASHER	1M04
278164	PLUG	1D11
279413	PLUG	1D03
279415	PLUG	1D03
279648	SPECIAL SET BOLT	1C11
279652	AIR CLEANER	1N02
279652	AIR CLEANER	1N03
279653	HOSE CLIP	1N02
279678	SPRING	1J17
279679	SPRING	1J17
279970	PLATE	1J17
300816	GRAB HANDLE	2G02
300824	BONNET REST STRIP 35" LONG	2G05
301005	HOOK	2K07
301321	RING FOR EYELET	2H16
301321	RING-EYELET	2I02
301347	RUBBER PLUG	2K04
301347	RUBBER PLUG	2K05
301437	SEAL	2G10
301437	GROMMET	2G11
301470	REAR SEAT BACK REST PANEL	2K07
301476	RETAINING ROD FOR REAR SEAT	2K07
301879	RIVET	2H02
301879	RIVET	2H04
301879	RIVET	2H07
302177	WEATHER STRIP	2H17
302178	FILLER STRIP	2H17
302186	POP RIVET	2J13

PART NUMBER	DESCRIPTION	REF.NO.
302222	RIVET	2G13
302222	RIVET	2G17
302371	RUBBER WASHER	2H17
302373	RUBBER WASHER	2H17
302533	BOLT	2G10
302533	BOLT	2G17
302648	STRAP	2K07
302818	RIVET	2H18
302825	BRACKET	2H03
302825	RETAINER-TAILBOARD CHAIN	2H06
302828	CLEVIS PIN	2H03
302828	CLEVIS-TAILBOARD CHAIN	2H06
302933	TIE BAR	2H02
302933	PIVOT-SPARE WHEEL MOUNTING	2H05
302933	STUD	2H12
302934	WING NUT	2H02
302934	WING-NUT	2H05
302934	WING NUT	2H12
303750	SPECIAL BOLT	2G08
303750	BOLT-SPECIAL	2G10
303817	RETAINER	2G10
303817	RETAINER	2G11
303828	COVER PLATE	2G10
303847	CLAMP	2H02
303847	RETAINER-SPARE WHEEL MOUNTING	2H05
303847	CLAMP SPARE WHEEL	2H12
303875	HINGE COMPLETE	2H05
303875	HINGE-LOCKER LID	2H07
303975	SEALING RUBBER	2H13
304054	PAD	2K06
304125	BUFFER	2I02
304125	BUFFER-RUBBER-SEAT SQUAB	2J09
304125	BUFFER-RUBBER-SEAT SQUAB	2J11
304125	BUFFER-RUBBER-SEAT SQUAB	2J13
304301	BRACKET	2L04
304401	LID FOR LOCKER	2H05
304401	LID-LOCKER	2H07
304716	RETAINER	2J04
305192	POP RIVET	2H15
305232	PLATE PACKING-DOOR CHECK	2G18
305232	SHIM FOR CAB BODY	2H02
305232	PLATE-BODY PANEL FRONT	2H04
305232	PLATE-STIFFENER-REAR BODY	2H07
305232	BRACKET-TOE PANEL	2H08
305232	PLATE-DOOR STRIKER	2H18

PART NUMBER	DESCRIPTION	REF.NO.
306287	WEATHER STRIP-SIDE LIGHT	2H16
306289	FILLER STRIP-SIDE LIGHT	2H16
306295	BUFFER	2G18
306295	BUFFER-RUBBER-REAR DOOR	2H16
306295	BUFFER	2I02
306316	BOARD-BASE-REAR SEAT	2K04
306316	SEAT BASE PANEL	2K06
306407	NAME PLATE	2H03
306407	BADGE 'STATION WAGON'	2H07
306460	DOOR PULL HANDLE	2J08
306564	CLEVIS PIN	2G16
307220	RUBBER PLUG	2G09
307220	PLUG-RUBBER	2L08
307418	FINISHER-FRONT REAR SEAT	2K04
307418	FINISHER-FRONT-REAR SEAT	2K05
307418	FINISHER	2K06
307419	FINISHER-RH-SIDE REAR SEAT	2K04
307419	FINISHER-RH-REAR SEAT	2K05
307419	FINISHER	2K06
307420	FINSIHER-LH-SIDE-REAR SEAT	2K04
307420	FINISHER-LH-REAR SEAT	2K05
307420	FINISHER	2K06
307840	RIVET	2I02
308206	TREAD PLATE	2H05
308517	TUBULAR RIVET	2G17
308517	RIVET	2H17
308517	RIVET	2H18
310877	RUBBER BUFFER FOR FRONT	2G05
311373	SHAKEPROOF WASHER	2F09
312027	BUFFER	2I02
312028	RUBBER BUFFER	2K06
312856	GROMMET-(CHASSIS SIDEMEMBER)	1J12
312856	GROMMET	2F06
313385	NUT	1N14
313385	NUT	1N16
313385	NUT	1N17
315264	CLIP-TRIM	2K02
315264	CLIP-TRIM	2K03
315960	CLIP	2K02
315960	CLIP	2K03
315960	CLIP-SEAT COVER RETAINING	2K04
320045	BLT MUSH HEAD 0.25 X0.75¢LONG	2G10
320045	SCREW	2G11
320045	SCREW	2H04
320045	SCREW	2H07

PART NUMBER	DESCRIPTION	REF.NO.
320521	REAR SEAT HINGED BASE	2K07
320604	TAILBOARD	2H13
320608	LENS FOR ROOF LAMP	2F06
320609	BARREL LOCK	2H18
320674	CUSHION	2K07
320679	TRIM CASING	2J08
320682	CASING	2J07
320682	CASING RH-SIDE LIGHT	2J08
320683	CASING	2J07
320683	CASING LH-SIDE LIGHT	2J08
320684	CASING	2J07
320684	CASING RH-SIDE LIGHT	2J08
320685	CASING	2J07
320685	CASING LH-SIDE LIGHT	2J08
320686	CANT RAIL	2J07
320686	TRIM RH-CANTRAIL	2J08
320687	CANT RAIL	2J07
320687	TRIM LH-CANTRAIL	2J08
320698	SEAT SQUAB	2J09
320698	SEAT SQUAB	2J11
320699	SEAT CUSHION	2J10
320699	SEAT CUSHION	2J11
320701	SEAT SQUAB	2J09
320701	SEAT SQUAB	2J11
320702	SEAT SQUAB	2J09
320702	SEAT SQUAB	2J11
320703	SEAT BACKREST	2K06
320708	SEAT SQUAB	2J09
320709	SEAT SQUAB	2J09
320710	SEAT SQUAB	2J09
320711	CANT RAIL	2J07
320712	CANT RAIL	2J07
320715	DOOR CASING	2J08
320716	DOOR CASING	2J08
320719	REAR SEAT SQUAB	2K08
320726	CUSHION	2J09
320861	REAR BODY COMPLETE 109 2.25	2H04
320863	REAR BODY LOWER ASSEMBLY 88	2H02
320901	STG BALL JOINT RH THREAD	1K06
320902	BALL JOINT ASSY LH THREAD	1K06
320902	BALL JOINT	1K07
320903	STEERING TRACK ROD ASSEMBLY	1K06
330037	FRONT FLOOR PLATE RH	2G10
330038	FRONT FLOOR PLATE LH	2G10
330069	GEARBOX DIAPHRAGM	2G10

PART NUMBER	DESCRIPTION	REF.NO.
330122	TOP CAPPING	2G13
330123	TOP CAPPING	2G13
330144	COVER PLATE	2G08
330145	BODY CAPPING	2H06
330146	SUPPORT BRACKET	2G15
330162	BUFFER	2G14
330162	FILLER-GLASS REAR SIDE DOOR	2G17
330163	SEALING STRIP SIDESCREEN-DOOR	2G14
330198	RETAINER	2G14
330202	FILLER	2G14
330203	FILLER	2G14
330203	FILLER-GLASS-REAR SIDE DOOR	2G17
330208	BRACKET	2H02
330212	RUBBER STRIP	2H02
330214	REAR BODYSIDE ASSY RH 88	2H02
330215	REAR BODYSIDE ASSY LH 88	2H02
330237	CORNER BRACKET	2H03
330237	BRACKET RH-TAILBOARD RETAINER	2H06
330237	BRACKET-CORNER TAILBOARD RH	2H08
330238	CORNER BRACKET	2H03
330238	BRACKET LH-TAILBAORD RETAINER	2H06
330238	BRACKET-CORNER TAILBOARD LH	2H08
330245	CAPPING FRONT PANEL	2H03
330245	CAPPING-BODY FRONT	2H06
330265	CROSS MEMBER	2H02
330265	STIFFENER-REAR BODY FLOOR	2H04
330265	CROSSMEMBER-REAR BODY	2H07
330267	REAR FLOOR	2H02
330271	REAR MOUNTING ANGLE	2H02
330303	STAY	2G13
330304	STAY	2G13
330315	HOOD SOCKET	2H03
330315	CAPPING RH-BODY CORNER REAR	2H06
330316	HOOD SOCKET	2H03
330316	CAPPING LH-REAR CORNER	2H06
330348	RETAINER	2G12
330349	COVER PLATE	2G12
330366	COWL	2H02
330366	PANEL-FUEL FILLER	2H05
330367	COVER PLATE	2H02
330380	SILL CHANNEL	2G13
330381	SILL CHANNEL	2G13
330422	SLEEVE FOR CHAIN	2H03
330422	COVER-TAILBOARD CHAIN	2H06
330426	OUTER PANEL	2G07

PART NUMBER	DESCRIPTION	REF.NO.
330427	OUTER PANEL	2G07
330443	BOTTM PANEL-FRT.WING VALANCE	2G08
330459	COVER BOX	2G08
330460	COVER BOX	2G08
330468	MOUNTING ANGLE	2H04
330534	PANEL	2G08
330602	WHEEL HOUSING	2H05
330615	TREAD PLATE FOR REAR BODY	2H05
330616	COVER PLATE	2H05
330617	REAR FLOOR	2H04
330660	SEALING RUBBER	2G14
330660	CHANNEL-REAR SIDE GLASS	2G17
330661	CHANNEL	2G14
330661	FILLER-REAR SIDE GLASS	2G17
330661	CHANNEL-SIDE WINDOW GLASS	2H16
330667	RETAINER	2G10
330668	RETAINER	2G10
330669	RETAINER	2G10
330717	TREAD PLATE VERTICAL FRONT PANEL	2H05
330788	SEAL RETAINER RH	2H17
330789	SEAL RETAINER LH	2H17
330832	CAPPING BODY SIDE	2H03
330833	CAPPING BODY SIDE	2H03
330848	RUNNER	2H16
331006	SEAT SUPPORT	2J09
331006	SEAT SUPPORT	2J11
331007	SEAT SUPPORT	2J09
331007	SEAT SUPPORT	2J11
331007	SEAT SUPPORT	2J13
331008	SEAT SUPPORT	2J09
331008	SEAT SUPPORT	2J11
331008	SEAT SUPPORT	2J13
331083	GROMMET PLUG	2J10
331083	GROMMET PLUG	2J11
331122	PIVOT BRACKET	2K06
331196	SIDE RAIL	2J06
331203	STRIP	2J06
331203	STRIP	2J07
331216	SIDE RAIL	2J07
331229	SEAT FRAME	2K07
331273	STRAP	2J09
331273	STRAP	2J11
331273	STRAP	2J13
331390	OUTER BRACKET	2J06
331391	CENTRE BRACKET	2J06

PART NUMBER	DESCRIPTION	REF.NO.
331391	CENTRE BRACKET	2J07
331401	RUBBER MAT	2J08
331457	FLOOR COVERING	2J04
331466	ADJUSTABLE SEAT FRAME ASSEMBLY	2J10
331466	ADJUSTABLE SEAT FRAME ASSEMBLY	2J11
331478	SUPPORT	2K06
331479	SUPPORT	2K06
331480	RETAINER	2J08
331481	MAT	2J08
331491	ROOF TRIM	2J06
331491	ROOF TRIM	2J07
331508	HEAD CLOTH	2J06
331527	FLOOR COVERING	2J04
331547	STRIP	2J07
331605	HEADCLOTH	2J07
331607	PANEL	2J06
331607	PANEL	2J07
331610	HEADCLOTH	2J07
331616	COVER	2K03
331669	RETAINER	2J08
331670	MAT	2J08
331670	MAT-RUBBER-REAR FLOOR	2K08
331699	BUFFER	2K07
331708	BOLT(0.312" UNF)	2K02
331709	BOLT	2J09
331709	BOLT	2J11
331709	BOLT	2J13
331709	BOLT SPECIAL	2K04
331709	BOLT-SPECIAL	2K05
331818	BRACKET	2J09
331818	BRACKET	2J11
331835	PAD	2K07
331973	STRAP	2J12
331973	STRAP	2J09
331974	STRAP	2J12
331974	STRAP	2J13
331974	STRAP	2J09
332028	LONG STIFFENER CENTRE & OUTER	2H17
332065	STUD PLATE	2H15
332146	BUFFER	2H03
332146	BUFFER-RUBBER-TAILBOARD	2H06
332147	DOVETAIL FOR DOOR PILLAR	2H18
332194	TROPICAL ROOF	2H17
332201	BRACKET	2H15
332215	SEAL	2H15

PART NUMBER	DESCRIPTION	REF.NO.
332216	PACKING STRIP	2H16
332230	RETAINER	2H16
332240	RETAINER	2H17
332280	RETAINER	2H16
332281	RETAINER	2H16
332282	RETAINER	2H16
332283	RETAINER	2H16
332284	RETAINER	2H16
332293	SPECIAL WASHER	2H15
332324	CATCH	2H16
332325	CATCH	2H16
332329	TAPPED PLATE	2H16
332355	STRAP	2J09
332376	BRACKET	2K03
332376	BRACKET	2K04
332400	WASHER PLATE	2G06
332401	BONNET CONTROL	2G06
332435	WINDOW CATCH	2G17
332445	HOOK	2H13
332446	HOOK	2H13
332451	NUT PLATE	2H02
332451	RETAINER-BODY	2H04
332451	RETAINER-REAR BODY	2H07
332484	SUPPORT BRACKET	2G15
332485	SUPPORT BRACKET	2G15
332521	STAY	2H02
332521	BRACKET-REAR BODY WHEELARCH	2H04
332521	BRACKET-REAR BODY STIFFENER	2H07
332563	SEAL LH-REAR DOOR SIDE	2H18
332564	RUBBER SEAL	2H18
332565	PROTECTION STRIP	2H03
332565	PROTECTION STRIP-REAR DOOR	2H18
332566	SEAL RETAINER	2H18
332581	STAY	2G08
332582	PAD	2H02
332582	PAD-MOUNTING BODY	2H04
332582	PAD-MOUNTING BODY	2H07
332647	BUFFER	2G09
332670	NAMEPLATE	2H03
332670	BADGE "LAND ROVER"	2H06
332670	BADGE'LAND ROVER'	2H07
332672	RUBBING STRIP BRACKET ASSY	2H05
332674	RUBBING STRIP-SPARE WHEEL	2H05
332677	RUBBING STRIP BRACKET	2H12
332733	RETAINER	2G18

PART NUMBER	DESCRIPTION	REF.NO.
332756	RETAINER	2H18
332942	MALE DOVETAIL-DOOR PILLAR	2H18
332943	SPACER	2H18
332983	REAR BODY ASSEMBLY	2H07
333032	RETAINER BOTTOM-REAR DOOR GLASS	2H18
333033	RETAINER	2G17
333033	RETAINER-REAR DOOR GLASS	2H18
333034	RETAINER-TOP-REAR DOOR GLASS	2H18
333035	RETAINER-CORNER-REAR DOOR GLASS	2H18
333036	HINGE	2H16
333036	HINGE	2I02
333041	ROD	2G18
333041	CHECKSTRAP-REAR DOOR	2H16
333041	CHECK STRAP	2I02
333081	FILLER	2G17
333082	PACKING STRIP	2G17
333140	STRIKING PLATE	2G15
333140	STRIKER PLATE	2G18
333140	STRIKER PLATE-REAR DOOR LOCK	2H18
333201	COVER PLATE	2H07
333202	COVER PLATE	2H07
333203	STRIP	2H18
333204	ROD	2G18
333229	SEALING RUBBER	2G17
333233	SEALING RUBBER	2G17
333243	FRONT EXTENSION	2H07
333244	FRONT EXTENSION	2H07
333246	TROPICAL ROOF	2H17
333252	STIFFENER	2H17
333253	PROTECTION ANGLE	2H03
333253	CAPPING RH-REAR BODY SIDE	2H06
333253	CAPPING-BODY END RH	2H08
333254	PROTECTION ANGLE	2H03
333254	CAPPING-LH BODY CORNER REAR	2H06
333254	CAPPING-BODY END LH	2H08
333259	BRACKET FOR SILL REAR END RH	2G17
333260	BRACKET FOR SILL REAR END LH	2G17
333261	SEALING RUBBER	2G17
333262	SEALING RUBBER	2G17
333263	SEALING RUBBER	2H07
333266	CORNER CAPPING	2H08
333267	CORNER CAPPING	2H08
333293	CLIP	2K07
333294	CLIP	2K07
333295	BRACKET	2K07

PART NUMBER	DESCRIPTION	REF.NO.
333395	GRAB RAIL	2K03
333395	GRAB RAIL-SHAPED	2K04
333439	RETAINING PLATE	2H16
333439	RETAINING PLATE	2I02
333445	BUFFER	2H16
333445	BUFFER	2I02
333446	CLAMP PLATE	2H16
333446	CLAMP PLATE	2I02
333452	SIDE AND WHEELARCH	2H07
333487	SEALING RUBBER	2H15
333551	RETAINING SEAT FRAME	2K08
333560	REAR FLOOR	2H07
333562	SIDE AND WHEELARCH	2H07
333693	PANEL	2G12
333714	NUT PLATE	2H08
333719	WAIST MOULDING	2G17
333720	WAIST MOULDING	2G17
333745	SEALING RUBBER	2H07
333835	FRONT VENTILATOR	2H17
333836	REAR VENTILATOR	2H17
333882	GEARBOX COVER	2G10
334111	MOUNTING PAD	2F06
334111	PAD-ROOF LAMP	2J06
334111	PAD-ROOF LAMP	2J07
334121	HINGE PIN	2G09
334174	SQUAB LOCKING PLATE ASSY	2K02
334174	SQUAB LOCKING PLATE ASSY	2K03
334176	BOLT 0.312 UNF	2K02
334176	BOLT 0.312 UNF	2K03
334177	NUT PLATE	2K02
334177	NUT PLATE	2K03
334189	GROMMET	2G10
334391	LOWER PLATE	2K08
334523	HASP	2G12
334523	HASP-LOCKER LID	2H05
334523	HASP-LOCKER LID	2H07
334525	TURNBUCKLE	2G12
334525	TURNBUCKLE-LOCKER LID	2H05
334525	TURNBUCKLE-LOCKER LID	2H07
334532	SEAT BACKREST PANEL	2K08
334540	RETAINING ROD	2K08
334541	FRAME REAR SEAT	2K08
334542	FRAME REAR SEAT	2K08
334573	BRACKET	2K04
334573	BRACKET	2K05

PART NUMBER	DESCRIPTION	REF.NO.
334574	BRACKET-RH	2K05
334574	BRACKET RH	2K04
334575	BRACKET LH	2K04
334575	BRACKET LH	2K05
334601	RETAINING BRACKET	2K08
334612	SEALING RUBBER RH	2H15
334613	SEALING RUBBER LH	2H15
334615	SEALING RUBBER	2H17
334845	RETAINER REAR MAT	2K08
334966	PANEL	2G12
336285	GRAB RAIL ASSEMBLY	2K04
336285	GRAB RAIL ASSEMBLY	2K05
336288	SEAT LOCKING CATCH	2K05
336288	SEAT LOCKING CATCH	2K04
336294	STRIKER PLATE-SEAT LOCK	2K05
336294	STRIKER PLATE SEAT LOCK	2K04
336412	LOCKING PLATE	2H13
336422	COVER	2G10
336451	CHANNEL	2G14
336454	CHANNEL	2G14
336454	CHANNEL-GLASS-REAR SIDE DOOR	2G17
336454	CHANNEL-SIDE WINDOW GLASS	2H16
336503	DISTANCE PIECE FIXING TROPICAL ROOF	2H17
336535	PIVOT PIN	2G06
336536	WASHER	2G06
336738	TIE BOLT	2G09
336764	DRAIN CHANNEL	2H15
336780	RETAINING REAR MAT	2K08
336781	RETAINER REAR MAT	2K08
336782	BOLT PLATE ASSEMBLY	2H04
336872	BRACKET	2G04
336890	DOOR PANEL ASSEMBLY(ALL)	2H18
337290	SEALING RUBBER	2H03
337290	SEAL-RUBBER-TAILBOARD	2H06
337644	WINDSCREEN GLASS	2G10
337710	SILL PANEL	2G13
337711	SILL PANEL	2G13
337771	STAY FOR BODY PANEL AND SILL	2G13
337772	STAY FOR BODY PANEL AND SILL	2G13
337774	BRACKET	2G13
337801	DOOR LOCK	2G15
337801	LOCK-REAR DOOR	2H18
337802	DOOR LOCK	2G15
337806	STUD PLATE	2G15
337806	STUD-PLATE-DOOR LOCK	2G18

PART NUMBER	DESCRIPTION	REF.NO.
337806	STUD PLATE-REAR DOOR LOCK	2H18
337859	FOAM INTERIOR	2J12
337859	FOAM INTERIOR	2J09
337873	FOAM INTERIOR	2J09
337873	FOAM INTERIOR	2J11
337880	FOAM INTERIOR	2J09
337880	FOAM INTERIOR	2J11
337899	FOAM INTERIOR	2J10
337899	FOAM INTERIOR	2J11
337899	FOAM INTERIOR	2J12
337899	FOAM INTERIOR	2J09
337938	SILL PANEL	2G13
337939	SILL PANEL	2G13
337942	SILL PANEL	2G13
337943	SILL PANEL	2G13
338013	SMALL PLUG	2L09
338014	RUBBER PLUG	2F07
338014	PLUG	2F08
338014	PLUG-PLASTIC	2L09
338015	BLANKING PLUG	2F13
338015	PLUG-RUBBER-FRONT WING	2G07
338015	GROMMET	2I03
338015	PLUG-PLASTIC	2L09
338015	PLUG-BLANKING	2L13
338017	BLANKING PLUG	2F13
338018	PLUG FOR 6 WAY SWITCH BRKT	2L09
338020	PLASTIC PLUG	2L09
338021	PLAS PLUG-RED HOLES 0.812 ¢DIA	2L09
338023	PLASTIC PLUG FOR 1 DIA HOLE	2L09
338026	PLUG-TRANSFER LEVEL HOLE	2G11
338027	PLASTIC PLUG	1L06
338027	PLUG-PLASTIC	2H05
338027	PLUG-PLASTIC	2L09
338027	PLUG-SELF-SEALING	2L13
338029	PLUG	1L06
338029	PLUG-PLASTIC	2L09
338029	PLUG-SELF-SEALING	2L13
338240	TURRET NUT	2G10
338275	SUPPORT BRKT-INTRIOR MIRROR	2I03
338334	GRAB RAIL	2K02
338334	GRAB RAIL	2K03
338345	SUPPORT	2K03
338345	SUPPORT	2K04
338352	SEAT CUSHION INTERIOR	2K03
338353	TRIM BOARD	2K02

PART NUMBER	DESCRIPTION	REF.NO.
338380	SPRING CLIP FIXING STRIP	2G05
338550	RUBBER BUFFER	2H15
338552	BRACKET	2H15
338553	RUBBER BUFFER	2H15
338554	BRACKET	2H15
338617	TAILBOARD HINGE	2H13
338618	TAILBOARD HINGE	2H13
338740	STUD	2H15
338741	STUD	2H15
338743	STRIP	2H03
338780	GROMMET	2G12
338871	SEAL	2G10
338871	SEAL	2G11
339878	RETAINING STRAP ASSEMBLY	2K06
339986	PACKING PIECE	2J13
340391	WASHER	2H16
345100	BRACKET-RH-RETAINING SAFETY	2J16
345100	SILL GUSSET BRACKET RH	2I15
345101	BRACKET-LH-RETAINING SAFETY	2J16
345101	SILL GUSSET BRACKET LH	2I15
345116	RETAINER	2K03
345120	INTERMEDIATE FLOOR	2H07
345140	GROMMET	2G11
345192	SECURING BRACKET FOR PANEL	2G05
345213	WASHER	2J13
345433	DOOR LOCK AND MOUNTING ASSY-çRH	2G15
345434	DOOR LOCK AND MOUNTING ASSY-çLH	2G15
345435	LOCKING CATCH RH	2G15
345435	CATCH RH-SLIDING WINDOW	2G18
345436	LOCKING CATCH LH	2G15
345436	CATCH LH-SLIDING WINDOW	2G18
345585	INTERIOR DRIVING MIRROR	2I03
345597	MTG BLOCK FOR NUMBER PLATE LAMP	2F04
345620	HEADLAMP MOUNTING PANEL RH	2G07
345621	HEADLAMP MOUNTING PANEL LH	2G07
345623	FRONT PANEL	2G07
345624	FRONT PANEL	2G07
345658	CAPPING	2H15
345659	CAPPING	2H15
345662	CLIP	2F15
345845	DASH VENTILATOR LID RH	2G09
345846	DASH VENTILATOR LID LH	2G09
345915	REINFORCING PANEL FOR TAILBOARD	2H13
346140	CATCH-FEMALE	2H13
346241	NUT PLATE	2G15

PART NUMBER	DESCRIPTION	REF.NO.
346241	RETAINER-STRIKER PLATE	2G18
346341	DOOR HINGE	2H16
346341	DOOR HINGE	2I02
346346	DELUXE GRILLE	2G05
346410	TUBE TRIM RETAINER	2J09
346410	TUBE TRIM RETAINER	2J11
346426	PLUG	2G13
346426	PLUG-REAR SIDE GLASS	2G17
346435	REAR LOWER VALANCE ASSY-LH	2G07
346436	REAR LOWER VALANCE ASSY-LH	2G07
346460	PACKING STRIP BOTTOM	2G14
346461	PACKING STRIP BOTTOM	2G17
346570	GEARBOX DIAPHRAGM PANEL	2G11
346576	VENTILATOR MECHANISM ASSY	2G09
346598	COVER PLATE	2G09
346599	COVER PLATE	2G09
346629	CLOSING PANEL HEATER DUCT-¢LH STG	2J03
346675	END CLOSING TRIM RHS	2J02
346676	END CLOSING TRIM LHS	2J02
346679	END CLOSING TRIM	2J02
346680	END CLOSING TRIM	2J02
346702	W/SCREEN COMP LAMINATED SUNDYM	2G10
346713	BRACKET STEERING COLUMN	1K03
346715	CLIP STEERING COLUMN SUPPORT	1K03
346722	BRACKET STEERING COLUMN	1K03
346723	PADDED ASSY HEATER DUCT-¢RH ST	2J03
346724	PADDED ASSY HEATER DUCHT-¢LH STG	2J03
346749	BLANKING PLATE FOR DASH	2G09
346750	UPPER DASH CRASH PADDING ASSEMBLY	2J02
346760	HEATER SWITCH LABEL	2F07
346761	WIPER WASHER COMBINED LABEL	2F07
346762	SIDE TAIL HEADLAMP LABEL	2F07
346763	INSTRUMENT PANEL ILLUMINATION LABEL	2F07
346765	INSTRUMENT PANEL ILLUMINATION LABEL	2F07
346766	WINDSCREEN WIPER LABEL	2F07
346767	BLANKING PLUG REDUNDANT HOLE	2F07
346786	INSTRUMENT COVER	2J03
346804	CLAMPING BAR	2K06
346813	CLOSING PANEL HEATER DUCT ¢RH STG	2J03
346817	BLANKING PLATE	2G09
346840	COVER FOR WIPER MOTOR	2J03
346849	BUSH FOR BONNET HINGE	2G06
346853	BONNET HINGE RH	2G06
346854	BONNET HINGE LH	2G06
346857	COVER PLATE HAND CONTROL	1O14

PART NUMBER	DESCRIPTION	REF.NO.
346878	CHECK STRAP RETAINING BKT	2G16
346893	DEMISTER OUTLET FRESH AIR GRILLE	2J02
346899	GROMMET INSTRUMENT PANEL CLOSING	2J02
346927	SLIDE RETAINER RH	2G16
346928	SLIDE RETAINER LH	2G16
346941	AIR FLOW DIVIDER PANEL	2G09
346944	COWL FOR INSTRUMENT PANEL	2F07
346945	INSTRUMENT PANEL RHD	2F07
346946	INSTRUMENT PANEL LHD	2F07
346947	PANEL PLUG-HEATER SWITCH HOLE	2F07
346948	PANEL PLUG-INSTRUMENT PANEL	2F07
346981	COVER PLATE	2G09
346984	HINGE ARM TO WINDSCREEN	2G10
346989	HINGE BOLT WINDSCREEN TO DASH	2G10
347018	SILL PANEL RH REAR	2G13
347019	SILL PANEL LH REAR	2G13
347035	BODY SIDE LOWER ASSEMBLY	2H04
347036	BODYSIDE LOWER ASSY LH 109	2H04
347042	REAR BODYSIDE RH 2 6 109	2H04
347043	BODYSIDE LOWER ASSY RH	2H04
347056	REAR BODYSIDE RH 2.25 109	2H04
347057	REAR BODYSIDE LH 109	2H04
347200	SEAT BASE ASSEMBLY	2G12
347308	EDGING STRIP	2F13
347308	EDGING STRIP	2L13
347321	COVER FOR WIPER MOTOR	2J03
347322	WINDOW CATCH COMPLETE	2G15
347322	CATCH-WINDOW	2G17
347343	SEAT FRAME ASSEMBLY CENTRE	2K04
347344	SEAT FRAME ASSEMBLY OUTER	2K04
347344	SEAT FRAME ASSY OUTER	2K05
347362	DOOR HINGE ASSEMBLY RH	2G16
347362	HINGE-RH-REAR SIDE DOOR	2G18
347363	DOOR HINGE ASSEMBLY LH	2G16
347363	HINGE-LH-REAR SIDE DOOR	2G18
347369	SEATING WASHER-DOOR HINGE	2G16
347369	SEATING WASHER-HINGES	2G18
347436	BRACKET	2G13
347441	BOLT PLATE SPARE WHEEL CARRIER	2H16
347441	BOLT PLATE	2I02
347452	BASE STIFFENER-INSTRUMENT PANEL COWL	2F07
347453	BASE STIFFENER-INSTRUMENT PANEL COWL	2F07
347464	NUT PLATE ASSEMBLY	2H05
347474	OUTER PANEL-FRT WING ASSY-RH	2G07
347475	OUTER PANEL-FRT WING ASSY-LH	2G07

PART NUMBER	DESCRIPTION	REF.NO.
347488	WINDOW LIGHT CHANNEL BOTTOM	2G14
347489	WINDOW LIGHT CHANNEL BOTTOM	2G17
347522	EDGE TRIM RH STG	2J03
347523	EDGE TRIM RH LH STG	2J03
347526	SEAL FOR WINDOW CATCH	2G15
347526	SEAL-WINDOW CATCH TO SIDE SCREEN	2G17
347541	CLIP SAFETY HARNESS	2J16
347541	STOWAGE HOOK FOR SEAT BELT	2I15
347553	BRACKET FOR SQUAB BUFFER	2H05
347553	BRACKET SQUAB BUFFER	2J13
347557	SHROUD FOR UPPER STEERING COLUMN	1014
347558	SHROUD FOR UPPER STEERING COLUMN	1014
347567	PROTECTIVE FINISHER FOR ROOF VENT	2H17
347578	ROD FOR CHECK STRAP	2G16
347594	SHIM	2G15
347594	SHIM-STRIKER PLATE	2G18
347637	RETAINER RH	2G10
347638	RETAINER LH	2G10
347646	SHROUD SUPPORT BRACKET RHD	1014
347647	SHROUD SUPPORT BRACKET LHD	1014
347668	CLIP DELUXE GRILLE TO GRILLE	2G05
347698	COVER FOR WIPER MOTOR	2J03
347807	TOE PANEL AND GUSSET BRACKET	2H08
347808	GUSSET BRACKET ASSEMBLY	2H08
347810	BACKING ANGLE	2H08
347861	SQUAB CATCH	2K05
347862	SQUAB CATCH	2K05
347863	NUTPLATE	2K05
347866	TIE BAR SPARE WHEEL CLAMP	2H02
347866	PIVOT SPARE WHEEL MOUNTING	2H05
347866	PIVOT SPARE WHEEL MTG	2H12
347869	RUBBER PACKING SQUAB ASSEMBLY	2J09
347869	RUBBER PACKING SQUAB ASSEMBLY	2J13
347924	TRIM FINISHER	2F13
347924	TRIM FINISHER	2L12
347948	BRAKE WARNING LABEL	2L13
347955	RADIATOR GRILLE PANEL	2G05
348393	CHANNEL	2H16
348394	CHANNEL	2H16
348396	CHANNEL	2H16
348430	STUD	2J12
348430	WASHER-PLAIN	2J13
348430	STUD-SEAT STRAP RETAINING	2K02
348430	STUD-SEAT STRAP RETAINING	2K03
348430	STUD-SEAT STRAP	2K04

PART NUMBER	DESCRIPTION	REF.NO.
348430	STUD	2J09
348678	RUBBER SEAL	2H17
348747	STRIP RUBBER	1K03
348852	SIDE LOCKER LID	2G12
348855	CENTRE LOCKER LID	2G12
348859	DETACHABLE LID SEAT BASE	2G12
348869	GEAR BOX COVER	2G11
348874	REAR FLOOR	2H04
348882	COVER PLATE	2H04
348893	FLOOR PLATE	2G11
348894	FLOOR PLATE	2G11
349218	BRACKET	2J06
349218	BRACKET	2J07
349354	DASH TOP CASING	2J04
349362	RETAINING BRACKET	2J04
349364	DASH TOP CASING	2J04
349514	SQUAB ASSEMBLY REAR TRANSVERSE SEAT	2K04
349515	CUSHION	2K04
349515	SEAT CUSHION ASSEMBLY	2K06
349516	CUSHION INTERIOR-REAR SEAT	2K04
349516	INTERIOR FOR SEAT CUSHION	2K06
349529	SQUAB INTERIOR TRANSVERSE REAR SEAT	2K04
349764	DOOR TRIM	2J08
349765	DOOR TRIM	2J08
349772	MASK FOR WINDOW CATCH	2G15
349772	MASK-WINDOW CATCH TO SIDE SCREEN	2G17
349899	CLIP	2J07
349899	CLIP-TRIM RETAINING	2J08
349931	WASHER	2J09
349931	WASHER	2J11
349931	WASHER	2J13
349931	WASHER-PLASTIC	2K04
349931	WASHER PLAIN	2K05
349943	BRACKET	2J10
349943	BRACKET	2J11
349943	BRACKET	2J12
349943	BRACKET	2J09
349943	BRACKET	2J13
349967	CUSHION	2J12
349967	CUSHION	2J09
349996	ADJUSTABLE SEAT FRAME ASSY	2J13
349997	STOP	2J13
349998	EDGING STRIP	2J13
367030	JACK RETAINING BRACKET	2H02
367030	JACK RETAINING BRACKET	2H05

PART NUMBER	DESCRIPTION	REF.NO.
367030	JACK RETAINING BRACKET	2H07
367030	RETAINING BRACKET-JACK	2L11
367078	SPACER	2F15
371144	RETENTION RING	2H02
371144	RETENTION RING	2H05
371144	RETENTION RING	2H07
371144	RETENTION RING	2L11
392107	PAD	2K09
395014	FRT WING TOP/VALANCE ASSY-RH	2G07
395037	LOCK-REAR DOOR	2H18
395060	SUPPORT BRKT-INTERIOR MIRROR	2I03
395064	BOLT PLATE	1K04
395064	STUD PLATE-SEAT SUPPORT	2J09
395064	STUD PLATE-SEAT SUPPORT	2J10
395064	STUD PLATE-SEAT SUPPORT	2J11
395073	SUPPORT BRKT-INTERIOR MIRROR	2I03
395185	FLYSCREEN ASSEMBLY	2G09
395249	HARNESS BRACKET ASSEMBLY	2H08
395252	HARNESS BRACKET	2I15
395254	HARNESS TIE BAR RH	2I15
395255	HARNESS TIE BAR LH	2I15
395258	HARNESS BRACKET	2I15
395294	STRIKER-REAR DOOR	2H18
395404	FRONT PANEL ASSY BULKHEAD	2H04
395409	FRONT END PANEL ASSY REAR BODY	2H02
395413	TOE PANEL AND GUSSET BRACKET	2H08
395414	SHIM FOR HARNESS BRACKET	2H08
395414	PLATE-HARNESS ANCHORAGE	2I15
395459	FRONT APRON PANEL	2G05
395481	BUFFER CHECK STRAP	2G16
395507	PARCEL TRAY RH STG	2J03
395508	PARCEL TRAY LH STG	2J03
395516	CORNER CAPPING	2H17
395517	CORNER CAPPING	2H17
395529	FRONT DOOR RH	2G13
395530	FRONT DOOR LH	2G13
395533	FRONT DOOR RH	2G13
395534	FRONT DOOR LH	2G13
395538	CHECK STRAP ROD ASSEMBLY	2G16
395541	LOCK SEAL	2G15
395541	LOCK SEAL	2G18
395541	LOCK SEAL	2H18
395586	MOUNTING BRACKET RH	2J16
395587	MOUNTING BRACKET LH	2J16
395598	DOOR SEALING RUBBER RH	2G13

PART NUMBER	DESCRIPTION	REF.NO.
395599	DOOR SEALING RUBBER LH	2G13
395617	BLANKING PLATE	2G09
395652	LOCK RH-DOOR	2G18
395653	LOCK LH-DOOR	2G18
395658	BOLT PLATE	2I15
395670	DOOR SEALING RUBBER RH	2G13
395670	SEAL RH-LOWER REAR SIDE DOOR	2G17
395671	DOOR SEALING RUBBER LH	2G13
395671	SEAL LH-LOWER REAR SIDE DOOR	2G17
395672	SEALING RUBBER	2G14
395673	SEALING RUBBER	2H17
395674	SEALING RUBBER FOR DOORS	2G17
395674	SEAL-SIDE PANEL FRT AND RR	2H15
395674	SEAL RH-REAR DOOR SIDE	2H18
395699	PANEL-FLOOR REAR BODY	2H04
395702	REAR BODYSIDE PANEL RH	2H04
395703	REAR BODYSIDE PANEL LH	2H04
395711	COVER PLATE-RR FLOOR FRONT	2H04
395712	COVER PLATE-RR FLOOR REAR	2H04
395719	BODYSIDE ASSEMBLY RH	2H04
395720	BODYSIDE ASSEMBLY LH	2H04
395802	FRONT PLATE UPPER CRASH RAIL	2G09
395803	FRONT PLATE UPPER CRASH RAIL	2G09
395860	GRAB RAIL-STRAIGHT	2K04
395871	DEMISTER OUTLET	2J02
396005	NUT PLATE ASSEMBLY	2H08
396113	SEALING RUBBER HARD TOP	2H18
396116	INSTRUCTION LABEL	2G05
396124	HORN PROTECTOR PLATE	2G05
396139	SEALING RUBBER DASH	2G09
396415	RETAINER-RH	2J04
396416	RETAINER-LH	2J04
396423	SLEEVE FOR GRAB RAIL-STRAIGHT	2K04
396540	COVER ASSEMBLY SEAT BASE	2K03
396540	COVER ASSEMBLY SEAT BASE	2K04
396541	TRIM RETAINER OUTER	2K03
396542	TRIM RETAINER CENTRE	2K03
396542	TRIM RETAINER CENTRE	2K04
396606	TRIM-RH-CANT RAIL	2J06
396607	TRIM-LH-CANT RAIL	2J06
396696	PAD	2K07
396697	PAD FOR REAR SEAT BACKREST	2K08
396698	REAR SEAT BACKREST ASSEMBLY	2K08
396739	REAR SEAT BACKREST	2K07
396828	SIDE LIGHT CASING RH	2J07

PART NUMBER	DESCRIPTION	REF.NO.
396828	CASING RH-SIDE LIGHT	2J08
396829	SIDE LIGHT CASING LH	2J07
396829	CASING LH-SIDE LIGHT	2J08
396842	SIDE RAIL FOR HEAD LINING	2J06
396842	SIDE RAIL FOR HEAD LINING	2J06
396843	RETAINER ROOF TRIM AT VENTILATORS	2H17
396888	REAR HEAD LINING	2J06
396895	FRONT PORTION ROOF TRIM	2J06
396895	FRONT PORTION ROOF TRIM	2J07
396899	CANOPY TRIM PANEL	2J06
396899	CANOPY TRIM PANEL	2J07
396906	HEADCLOTH	2J07
396916	CENTRE SEAT COMPLETE ASSY	2K02
396920	CENTRE SEAT SQUAB INTERIOR	2K02
396922	CENTRE SEAT SQUAB TRIM BOARD	2K02
396922	CENTRE SEAT SQUAB TRIM BOARD	2K03
396933	CENTRE SEAT CUSHION INTERIOR	2K03
396937	BRACKET FOR STARTING HANDLE	2K03
396937	BRACKET FOR STARTING HANDLE	2K04
396986	HEADCLOTH	2J07
399041	BRACKET-VACUUM VALVE	1I13
399042	BRACKET-VACUUM VALVE	1I13
500201	FILLER CAP	1G04
500257	ACCELERATOR PEDAL	1007
500257	PEDAL-ACCELERATOR	1009
500257	PEDAL-ACCELERATOR	1011
500289	INTERMEDIATE EX PIPE	2C04
500290	SILENCER AND TAILPIPE 109 4 CYL	2C08
500419	FILTER GAUZE	1N06
500432	ELBOW	1002
500432	PIPE-OUTLET-FUEL TANK	1004
500446	DISTANCE TUBE	1002
500446	DISTANCE PIECE-FUEL TANK MOUNTING	1003
500446	DISTANCE PIECE-FUEL TANK MTG	1005
500446	TUBE-DISTANCE-FUEL TANK MOUNTING	1006
500447	MOUNTING RUBBER	1002
500447	MOUNTING-RUBBER-FUEL TANK	1003
500447	MOUNTING RUBBER-FUEL TANK	1005
500447	RUBBER-FUEL TANK MOUNTING	1006
500588	PACKING WASHER	1002
500588	PACKING WASHER-FUEL TANK MOUNTING	1003
500588	PACKING WASHER-FUEL TANK	1005
500588	WASHER-PACKING-FUEL TANK MOUNTING	1006
500609	SPRING	1D07
500710	JOINT WASHER	1N14

PART NUMBER	DESCRIPTION	REF.NO.
500710	JOINT WASHER	1N15
500710	JOINT WASHER	1N16
500710	GASKET-FUEL FILLER PIPE	1N17
500746	WASHER	1J16
500818	FUEL TANK ELBOW	1O02
500978	JOINT WASHER SLEEVE TO AXLE	1J12
500978	GASKET SHAFT	1J13
501070	DISTANCE PIECE	1O02
501070	PACKING WASHER-FUEL TANK MOUNTING	1O03
501070	PACKING WASHER-FUEL TANK	1O05
501070	DISTANCE PIECE-FUEL TANK MOUNTING	1O06
501070	DISTANCE PIECE	2H16
501070	DISTANCE PIECE	2I02
501389	SCREW-ROAD SPRING	1J17
501390	MAIN LEAF	1J17
501391	2ND LEAF	1J17
501501	WASHER	1H04
501593	DOWEL	1C02
501593	DOWEL	1E02
502029	GUDGEON PIN	1E03
502116	DOWEL	1G02
502116	DOWEL	1G03
502202	HINGE	1H11
502205	BRACKET	1H11
502266	THRUST PLATE	1D06
502473	TAPPET GUIDE	1C06
502473	GUIDE-TAPPET	1E06
502482	DISTANCE PIECE	1H04
502687	SPECIAL SCREW FIXING CHOKE BUTTERFLY	1M02
502898	SPECIAL WASHER	1O08
502899	SPACER FOR SPINDLE	1O08
502900	SPINDLE BELL CRANK	1O08
502904	VALVE SPRING	1D07
502951	FUEL INSTRUCTION PLATE	2H02
502951	BADGE-DIESEL FUEL	2H05
503307	CLAMP	2C03
503309	SHIELD	2C03
503352	BULB 12¢V PEANUT TYPE/BAYONET TYPE	2F08
503352	BULB	2F13
503424	GREASE GUN	2L11
503456	INTERMEDIATE EXHAUST PIPE	2C05
503665	STARTING DOG	1C03
503665	STARTING DOG	1E03
503805	SPRING FOR SYNCROMESH BALL	1H04
503805	SPRING	1H06

PART NUMBER	DESCRIPTION	REF.NO.
503805	SPRING	1I06
503981	SPRING,PULL OFF	1L04
503981	SPRING	1L02
504006	SPRING WASHER	1C02
504006	WASHER	1E02
504211	DISTANCE PIECE FOR SHACKLE	1J16
504213	SHIM 0.003	1J16
504213	WASHER-SPACING	1J18
504214	SHIM 0.005	1J16
504214	WASHER-SPACING	1J18
504233	SEAL	1N14
504275	SHIM WASHER	1K04
504279	SHIM WASHER	1K04
504375	TIMING CHAIN	1C04
504606	TIE ROD	1D15
504607	SLEEVE	1D15
504620	RELAY LEVER	1O08
504655	CAP FUEL TANK FILLER	1N14
504655	CAP FUEL TANK FILLER	1N15
504655	CAP FUEL TANK FILLER	1N16
504656	TUBE	1N14
504656	TUBE	1N15
504656	TUBE	1N16
504657	TUBE	1N14
504657	TUBE	1N15
504657	TUBE	1N16
504673	JOINT WASHER	1N14
504995	VALVE-OIL RELIEF	1D05
504997	SPRING	1D05
505197	BULB LH STG	2F02
505198	BULB FOR HEAD LIGHT UNIT	2F02
505205	LUCAR CONNECTOR EARTHING	2F06
505205	EARTH BLADE	2J06
505205	EARTH BLADE	2J07
505244	JOINT WASHER	1N14
505244	JOINT WASHER	1N15
505244	JOINT WASHER	1N16
505244	GASKET-FUEL FILLER CAP	1N17
505597	SPACING WASHER	1D08
505790	SEAL	1L03
505855	FRONT EXHAUST PIPE	2C03
506047	STUD	1D11
506069	RUBBER WASHER	1C11
506069	RUBBER WASHER	1C12
506799	RING GEAR	1G02

PART NUMBER		DESCRIPTION	REF.NO.
506814		ADJ SCREW	1C06
506814		SCREW-TAPPET ADJUSTING	1E06
506816		SCREW	1D07
506817		SCREW	1D07
507025		SPECIAL SET BOLT	1C06
507025		BOLT-SPECIAL	1E06
507129		BULB	2F08
507447		PIN	1H11
507829		TAPPET ASSEMBLY	1C06
507829		TAPPET ASSEMBLY	1E06
508175		LOCKSTOP PLATE	1J05
508962		'D' WASHER	1013
508962		SPECIAL WASHER	1007
508962		WASHR-CURVED-ACCELERATOR PEDAL SHAFT	1009
508962		WASHER-SPECIAL	1011
509009		LEVER	1N10
509045		BOLT	1I10
509045	P	BOLT(0.375" UNF X 1.125")	1J02
509045	P	BOLT	1J03
509045	P	BOLT	1J04
509045	P	BOLT	1J14
509046		BOLT(0.375" UNF X 1.21875")	1J02
509120		HINGE PIN	2H16
509120		HINGE PIN	2I02
509218		DISTANCE TUBE FOR SHACKLE	1J18
509412		CLIP	1N13
509412		CLIP	1N13
509414		DOUBLE CLIP	1N11
509414		CLIP-FUEL PIPE	1N12
509414		CLIP-FUEL PIPE	1N13
509414		CLIP-FUEL PIPE	1N13
509415		CLIP	1N13
509415		CLIP	1N13
509463		PAD	1007
509463		PAD-RUBBER-ACCELERATOR PEDAL	1009
509463		PAD-RUBBER ACCELERATOR PEDAL	1011
509769		CHAIN FOR FILLER CAP	2D02
509885		BUSH	1D15
510170		WASHER	1N07
510170		WASHER-SHAKEPROOF	1N08
510823		BRAKE PIPE COMPLETE TO FRONT	1L09
511127		BUSH	1010
511680		SHAFT	1C04
511680		SHAFT-OIL PUMP	1E04
511833		GASKET	1N05

PART NUMBER	DESCRIPTION	REF.NO.
511834	VALVE GUIDE	1D11
512018	FAN BLADE	1C10
512206	VALVE ROCKER INLET RH	1C06
512207	VALVE ROCKER LH EXHAUST	1C06
512235	BANJO BOLT	1G05
512237	COVER	1H02
512287	NUT	1M06
512307	ADJUSTING SCREW CARBURETTER	1M06
512308	O RING FOR CARBURETTER	1M06
512311	O RING	1M06
512319	WASHER	1M06
512760	DUST COVER PLATE	1H10
512791	WASHER	1H10
512828	VALVE SEAT INSERT	1E11
513282	FAN DISC WASHER	2F10
513639	PUMP COVER	1C04
513639	BODY-OIL PUMP	1E04
513641	PUMP BODY	1C04
513641	BODY-OIL PUMP	1E04
513679	DRIVING DOG	2E02
513679	DOG-DISTIBUTOR DRIVE	2E03
513682	SEALING RING	2L17
514224	TUBE	1E11
514578	RED BRAKE RUBBER GREASE-TUBE	2L07
515218	RIM FOR LIGHT UNIT	2F02
515291	SCREW	1C11
515291	SCREW	1C12
515291	BOLT	1D12
515291	BOLT-SPECIAL	1E12
515321	SPRING RETAINER	1C04
515325	PLUG-SPRING RETAINER	1C04
515365	ANCHOR PLATE	1L05
515366	EXPANDER UNIT ASSY	1L05
515405	ANCHOR PLATE RH	1L04
515405	ANCHOR PLATE	1L02
515406	ANCHOR PLATE LH	1L04
515406	ANCHOR PLATE	1L02
515466	DUST COVER	1L05
515467	LOCKING PLATE	1L05
515468	RETAINING SPRING	1L05
515470	PACKING PLATE	1L05
515505	DISTANCE PIECE	2C02
515505	DISTANCE PIECE	2E13
515506	BRACKET	2C02
515599	JOINT WASHER	1J02

PART NUMBER	DESCRIPTION	REF.NO.
515599	WASHER	1J03
515599	JOINT WASHER	1J12
515599	JOINT WASHER-DRAIN PLUG	1O02
515599	JOINT WASHER-FUEL TANK DRAIN PLUG	1O04
515845	BREATHER	1I04
515845	BREATHER	1J02
515845	BREATHER-AXLE	1J03
515845	BREATHER-AXLE	1J12
515848	SIDE COVER PLATE	1K02
515849	JOINT WASHER	1K02
515851	OUTPUT SHAFT	1H07
515853	THRUST WASHER LOW GEAR TO	1H08
515923	EXPANDER UNIT KIT	1L05
515923	REPAIR KIT FOR EXPANDER UNIT	2L07
515924	ADJUSTER UNIT KIT	1L05
515924	REPAIR KIT FOR ADJUSTER UNIT	2L07
515926	BRAKE ROD	1L05
515927	CLIP	1L05
516059	HOUSING	1C10
516059	HOUSING-THERMOSTAT	1E10
516133	ENGINE BRACKET RH	1C02
516133	MOUNTING ENGINE	1E02
516498	CYLINDER LINER	1D03
516885	GASKET LARGE	1D13
516946	SPRING	1M05
516951	SPRING-CARBURETTER SPINDLE	1M07
516951	SPRING	1M10
516951	THROTTLE RETURN SPRING	2L17
516951	SPRING	1M06
516962	CLIP FOR CHOKE SPINDLE LEVER	1M03
517469	FRONT EX PIPE	2C03
517588	SPRING	1J17
517589	SPRING	1J17
517632	FRONT EX PIPE	2C03
517684	CLIP	1N13
517684	CLIP	1N13
517689	PLUG	1N10
517690	NUT	1N10
517706	JOINT WASHER	1N10
517903	PIPE-ELBOW TO AIR CLEANER	1N02
517903	CONNECTION ELBOW TO AIR CLEANER	1N02
517907	SUPPORT BRACKET RESERVOIR TANK	1G04
517976	JOINT WASHER	1N10
517977	RUBBER MAT	2I02
518272	CORE PLUG	1C02

PART NUMBER	DESCRIPTION	REF.NO.
518272	CORE PLUG	1C11
518272	CORE PLUG	1D11
518272	CORE PLUG	1E02
518272	CORE PLUG	1E11
518318	THRUST WASHER	1H07
518653	GRUB SCREW	1M10
518848	DRIVE END BEARING KIT	2E10
518848	BEARING KIT-DRIVE END-	2E12
518848	BEARING KIT-ALTERNATOR-DRIVE END	2E14
520160	PARKING SWITCH FOR WIPER MOTOR	2F06
520464	BOLT KIT FOR STARTER MOTOR	2E07
520464	BOLT KIT	2E08
521328	THRUST WASHER	1H07
521452	CIRCLIP	1M12
521452	CIRCLIP FOR LEVER	2L12
521453	CIRCLIP	1M12
521522	SHIM FOR STEERING BOX 0.010	1K02
521583	BUSH	1D05
521633	SPECIAL NUT	1H04
521634	LOCK WASHER-MAINSHAFT GEAR	1H04
521636	WASHER FOR MAINSHAFT GEAR	1H04
521852	DISTANCE PIECE	1H04
521853	ROLLER BEARING	1H09
521855	BUSH FOR MAINSHAFT HOUSING	1H09
521856	RETAINING PLATE	1H09
521857	HOUSING ASSEMBLY REAR MAINSHAFT	1H09
521864	BUSH FOR LOW GEAR WHEEL	1H07
521868	HIGH GEAR WHEEL	1H07
522017	MAINSHAFT GEAR	1H04
522303	SELECTOR SHAFT	1H13
522308	SPRING SPACER TRANSFER SELECTOR	1H12
522318	HOUSING ASSEMBLY	1H09
522334	SELECTOR FORK	1H13
522567	DIFFERENTIAL CASING	1J08
522745	BUSH	1C04
522932	BUSH-THROTTLE SPINDLE	1F06
522940	WASHER	1N10
523139	CAMSHAFT	1D06
523181	BRACKET	1E06
523203	CUP-PLUG	1I10
523203	CLIP-RH ADAPTOR	1M11
523240	SPLIT SEAL HALVES	1C03
523240	RETAINER-OIL SEAL	1D04
523240	RETAINER-REAR MAIN BEARING	1E03
523638	TYRE PUMP	2L11

PART NUMBER	DESCRIPTION	REF.NO.
524492	CONNECTING ROD ASSY	1D04
524636	PACKING	1D03
524680	SHROUD	1E11
524765	CUP PLUG	1C11
524765	CUP PLUG	1E11
524846	ROCKER COVER TOP ASSY	1C11
524894	NUT PIPE TO FILTER OR BOWL	1N08
524894	NUT-FUEL PIPE	1N12
524959	PUMP CONNECTION	2L11
525124	INLET VALVE	1D07
525389	WASHER	1C06
525390	SCREW	1C06
525390	BOLT-SPECIAL	1E06
525428	PLUG	1C02
525428	CUP PLUG	1D03
525428	CUP PLUG	1E02
525497	CUP PLUG	1C02
525497	CUP PLUG	1C11
525497	CUP PLUG	1D03
525497	CUP PLUG	1D11
525497	CORE PLUG	1E02
525497	CUP PLUG	1E11
525500	SET BOLT (0.3125 UNF X 2.75")	1C06
525520	GASKET KIT	1E02
525520	ENGINE OVERHAUL GASKET KIT	2L07
525852	CRANKSHAFT ASSY 0.010 U/S	1C03
525853	CRANKSHAFT ASSY 0.020 U/S	1C03
525910	ROCKER	1D07
525911	ROCKER	1D07
526608	PAD FOR BUMP RUBBER FRONT	2G02
526994	TRACK ROD ONLY	1K06
527109	WATER OUTLET PIPE	1C10
527109	HOUSING-THERMOSTAT	1E10
527110	JOINT WASHER	1C10
527110	GASKET-THERMOSTAT HOUSING	1E10
527167	CRANKSHAFT ASSEMBLY STD	1C03
527167	CRANKSHAFT	1E03
527235	O RING FOR THERMOSTAT	1C10
527235	SEALING RING-THERMOSTAT	1E10
527269	PLUG	1C02
527269	CORE PLUG	1D03
527269	CORE PLUG	1E02
528004	GUDGEON PIN BUSH	1C03
528683	LOCK WASHER	1H05
528685	PLATE	1H05

PART NUMBER	DESCRIPTION	REF.NO.
528690	RETAINING PLATE	1H05
528701	BEARING	1H05
528702	THRUST WASHER	1J06
528720	DISTANCE PIECE	1H05
528721	DISTANCE PIECE	1H05
528722	DISTANCE PIECE	1H05
528747	SEAL-OIL	1I11
528865	STUD	1H03
529394	BAFFLE PLATE	1C08
529823	SUMP	1C07
529823	SUMP-ENGINE OIL	1E07
530178	THRUST WASHER	1C04
530179	RETAINING RING	1C04
530343	OIL THROWER	1D04
530476	THERMOSTAT BYPASS	1C10
530476	HOUSING-WATER	1E10
530478	PUMP CASING	1C10
530478	BODY WATER PUMP	1E09
530481	SEALING PLATE	1D06
530890	PULLEY	1C10
530890	PULLEY-FAN	1E09
530966	OLIVE	1N10
530984	SHIM 0.003	1J06
530985	SHIM 0.005	1J06
530986	SHIM 0.010	1J06
530987	SHIM 0.030	1J06
530988	SWIVEL PIN & STEERING LEVER	1J06
530989	SWIVEL PIN & STEERING LEVER	1J06
530990	SWIVEL PIN & STEERING LEVER	1J06
530991	SWIVEL PIN & STEERING LEVER	1J06
531001	LOCKER	1J06
531040	RELAY LEVER UPPER	1K05
531043	STUD	1J06
531104	ENGINE BRACKET	1H09
531388	CONTROL ROD	1008
531388	CONTROL ROD PEDAL SHAFT	1011
531390	CONTROL ROD	1007
531390	ROD-ACCELERATOR CROSS SHAFT	1011
531391	CONTROL ROD	1012
531392	BELL CRANK	1012
531394	CLIP	1007
531394	RETAINER-ACCELERATOR CONTROL ROD	1008
531394	CLIP-ACCELERATOR ROD	1011
531394	RETAINER-ACCELERATOR ROD	1012
531394	RETAINER-CONTROL ROD	1014

PART NUMBER	DESCRIPTION	REF.NO.
531395	CROSS SHAFT LEVER	1007
531395	LVR-ACCELERATOR CROSS SHAFT	1011
531433	O RING	1J06
531440	CONTROL ROD ASSEMBLY	1008
531440	CONTROL ROD ASSEMBLY	1010
531494	STUD	1J06
531586	GASKET FOR HEAD LAMP	2F02
531684	STOP TAIL LAMP	2F03
531873	VALVE ROCKER	1D08
531874	VALVE ROCKER	1D08
531888	ANCHOR PLATE	1L04
531889	ANCHOR PLATE	1L04
531893	SPRING	1L04
532319	O RING	1D11
532319	'O' RING-OIL DIPSTICK TUBE	1F02
532323	SEAL	1H07
532323	'O'RING	1I09
532387	SEALING RING	1C07
532387	O RING	1D08
532387	'O'RING DIPSTICK	1E07
532387	O RING	1E08
532453	THERMOSTAT	1C10
532453	THERMOSTAT	1E10
532879	BASE FOR STOP TAIL LAMP	2F03
532880	LENS FOR STOP TAIL LAMP	2F03
532881	STOP TAIL LAMP	2F03
532926	ADJUSTING SCREW FOR SELECTOR SHAFT	1H13
532979	LOW GEAR WHEEL	1H08
533040	BOTTOM COVER	1H09
533080	GEAR CLUSTER	1H07
533358	PLUG-GEARBOX OIL FILLER	1I04
533358	PLUG-OIL FILLER GEARBOX	1I05
533731	HOUSING ASSEMBLY	1H09
533765	RETAINER-SPEEDO GEAR	1I11
533786	THRUST WASHER	1J08
533787	THRUST WASHER	1J08
533788	THRUST WASHER	1J08
534021	SPRING DOWEL	1010
534790	NUT	1M09
534897	BOLT-BANJO	1F06
535023	FOOT PUMP	2L11
535068	TOWING JAW AND PINTLE	2L03
535168	CARBURETTER LEVER BALL END	1008
535173	REAR ROAD SPRING	1J18
535286	RELAY LEVER	1K05

PART NUMBER	DESCRIPTION	REF.NO.
535708	STUD & DOWEL KIT	1D03
535989	VALVE SPRING	1D07
536152	FLASHER LAMP LENS	2F04
536273	PISTON ASSY	1D04
536275	PISTON ASSY	1D04
536514	EXHAUST MANIFOLD	1E13
536577	PLUG	1C02
536577	PLUG-DRAIN ENINE OIL	1C07
536577	PLUG	1C10
536577	PLUG	1C11
536577	PLUG	1D07
536577	PLUG	1D08
536577	PLUG	1E02
536577	PLUG-ENGINE OIL DRAIN	1E07
536577	PLUG	1E08
536577	PLUG	1E10
536577	PLUG-CYLINDER HEAD	1E11
536872	INLET CAM FOLLOWER RH	1D08
536873	INLET CAM FOLLOWER LH	1D08
536913	BARREL LOCK	2F09
536937	LUCRIMP CONNECTOR 3 WAY	1N08
536937	BULLET CONNECTOR	2F02
537229	OIL FILTER ASSEMBLY	1C12
537229	FILTER-OIL	1E12
537229	OIL FILTER ASSEMBLY	1E12
537269	PISTON ASSY	1D04
537271	PISTON ASSY	1D04
537685	SHACKLE PLATE	1J17
537686	PLATE	1J17
537687	PLATE	1J15
537734	SHACKLE PLATE INNER	1J18
537740	BOLT	1J18
537740	SHACKLE PIN	1J17
537741	SHACKLE PIN	1J15
537741	BOLT	1J16
537741	BOLT	1J17
537741	BOLT	1J17
537741	BOLT	1J18
537742	SHACKLE PIN	1J15
537742	BOLT	1J16
537763	BRAKE PIPE COMPLETE FRONT	1L09
537763	BRAKE PIPE	1L12
537778	SHACKLE PLATE OUTER	1J18
537791	CONTROL ROD	1012
537805	CLIP-TEE PIECE REAR BRAKE	1L09

PART NUMBER	DESCRIPTION	REF.NO.
537877	SPLIT BUSH	1K05
537964	MAIN LEAF	1J18
538038	JOINT WASHER	1C07
538038	GASKET FRONT COVER	1E08
538039	JOINT WASHER	1C07
538039	GASKET-FRONT COVER	1E08
538073	COVER	1C05
538073	COVER-CAMSHAFT-REAR	1E05
538131	THRUST WASHER	1C03
538131	WASHER THRUST	1E03
538132	THRUST WASHER	1C03
538132	WASHER THRUST	1E03
538133	THRUST WASHER	1C03
538133	WASHER THRUST	1E03
538134	THRUST WASHER	1C03
538134	WASHER THRUST	1E03
538499	JOINT WASHER DIAPHRAGM TO	1N07
538536	CONNECTOR	1H12
538616	GASKET	1L07
538671	JOINT WASHER	1C10
538671	GASKET-WATER PUMP	1E09
538768	DOUBLE CLIP FOR BRAKE PIPES	1L09
539572	WEIGHTS-DISTRIBUTOR	2E04
539575	SPINDLE-DISTRIBUTOR	2E04
539576	CLAMP-DISTRIBUTOR	2E04
539703	CROSS SHAFT	1J08
539706	PINION BEARING	1J08
539707	PINION BEARING	1J07
539718	SHIM	1J07
539720	SHIM	1J07
539722	SHIM	1J07
539724	SHIM	1J07
539741	HOUSING-SWIVEL PIN	1J05
539742	RAILKO BUSH	1J06
539745	WASHER	1J07
539787	CASING ASSEMBLY	1H09
539828	INTERMEDIATE GEAR	1H07
539887	LINK FOR TRANSFER SELECTOR SHAFT	1H13
539956	MAINSHAFT BEARING HOUSING ASSEMBLY	1H09
539993	FLANGE	1H10
540004	SPEEDOMETER WORM	1H08
540530	WASHER-PLAIN	1I11
540842	BOLT	1H12
540870	PLUG	1H03
541195	FLYWHEEL HOUSING	1G02

PART NUMBER	DESCRIPTION	REF.NO.
541215	GROMMET	1M09
541229	PLATE	1N13
541229	PLATE	1N13
541760	FLYWHEEL ASSEMBLY	1G02
541860	TUBE	1C07
541860	TUBE-DIPSTICK	1E07
541860	DIPSTICK TUBE	1E08
541910	CRANKSHAFT STD	1D04
541921	OIL SEAL	1D04
542036	SCREW & WASHER FOR STOP TAIL LAMP	2F03
542038	SCREW AND WASHER FOR FLASHER LAMP	2F04
542041	SPECIAL SCREW	2F03
542042	SPECIAL SCREW AND WASHER	2F04
542043	LENS	2F03
542045	BULB HOLDER	2F03
542048	LENS FOR FLASHER LAMP	2F04
542073	MUD EXCLUDER	1D09
542256	RIVET 0.125 DIA X 0.625 LONG	1D09
542396	OIL PUMP BODY	1D05
542410	CRANKCASE VENT UNIT	1C08
542425	SIDE ROCKER COVER	1D08
542492	OIL SEAL	1C03
542492	SEAL-OIL-REAR MAIN BEARING	1D04
542492	SEAL ASSY-OIL REAR MAIN	1E03
542494	OIL SEAL	1C03
542494	OIL SEAL AND RETAINER-	1D04
542494	SEAL ASSY-OIL REAR MAIN	1E03
542515	LOCKING PLATE FOR ADJUSTER	1L05
542600	SIDE COVER	1E09
542600	SIDE COVER ASSY	1C08
542601	STUD	1E09
542601	STUD	1C08
542622	KEY	1D04
542623	KEY	1D04
542762	BOSS	1O10
542776	PIN	1O10
542783	SPIRAL PIN	1O10
542845	NUT	1N08
542845	NUT-FUEL PIPE	1N12
542846	OLIVE	1N08
542846	OLIVE-FUEL PIPE	1N11
542846	OLIVE-FUEL PIPE	1N12
542846	OLIVE-FUEL PIPE	1N13
542846	OLIVE-FUEL PIPE	1N13
542861	SPRING	1O10

PART NUMBER	DESCRIPTION	REF.NO.
543108	'U' BOLT FRONT SPRING	1J15
543209	AIR CLEANER	1N02
543254	BRACKET	1D15
543275	DISTANCE PIECE	1L14
543281	PIN	1L14
543291	PLUNGER ROD	1L14
543292	PLUNGER ROD	1L14
543301	JACK HANDLE	2L11
543498	ANCHOR	1O11
543546	RATCHET	1L14
543589	CLIP	1N17
543589	CLIP	2L14
543589	CLIP	2L15
543764	HOSE	1N14
543764	PIPE-FUEL FILLER	1N17
543765	HOSE	1N14
543766	PIPE	1O02
543766	BREATHER PIPE-FUEL TANK	1O03
543766	HOSE-FUEL TANK BALANCE	1O04
543766	HOSE-FUEL TANK BALANCE	1O06
543767	PIPE	1N14
543767	PIPE	1N15
543767	BREATHER HOSE	1N16
543767	BREATHER HOSE	1N17
543767	HOSE-BREATHER FUEL TANK	1O04
543803	BOLT(0.3125 UNF X 1.50)	1O02
543808	PLATE	1O02
543818	STEM WASHER OUTER	1K08
543818	STEM FIXING WASHER STEERING DAMPER	1K07
543819	STEM WASHER INNER	1K08
543819	INTERMEDIATE STEM FIXING WASHER	1K07
543972	HOUSING FOR RELAY SHAFT	1K05
544337	BOLT SPECIAL	1K05
544389	DISTANCE PLATE	1N10
544573	LICENCE HOLDER	2G10
544581	DRAG LINK TUBE	1K07
544658	ELBOW	1O02
544674	ELBOW	1O02
545010	SWITCH	1C11
545010	SWITCH-THERMOSTAT	1D11
545010	SWITCH-WATER TEMPERATURE	1F06
545571	BEARING	1O10
546026	RATCHET	1C04
546026	RATACHET-TIMING CHAIN	1E05
546177	ADAPTOR	1E11

PART NUMBER	DESCRIPTION	REF.NO.
546203	BREATHER FILTER	1D12
546210	CLIP	1D12
546211	CLIP	1C08
546211	CLIP-SPRING-FUEL BREATHER	1N14
546211	CLIP-SPRING-FUEL BREATHER	1N15
546211	HOSE CLIP	1N16
546211	CLIP-FUEL BREATHER PIPE	1O04
546211	CLIP	2L12
546211	CLIP-HOSE	2L16
546277	BREATHER FILTER	1C08
546282	SLEEVE	1N10
546324	STARTING DOG	1D04
546440	FILLER CAP	1C08
546457	WASHER JOINT	1D08
546488	JOINT WASHER	1O02
546488	JOINT WASHER	1O04
546540	CLIP	1C08
546541	CLIP	1C08
546548	HOSE	1C08
546583	DIP STICK TUBE	1D08
546584	ADAPTOR	1D08
546588	HOSE	1C08
546590	UNION	1C08
546592	SIDE COVER-OIL FILLER PIPE	1C08
546798	TAPPET PUSH ROD	1C06
546799	PUSH ROD FOR VALVES	1E06
546841	JOINT WASHER SUMP	1C07
546841	GASKET-SUMP	1E07
546841	JOINT WASHER	1E08
547968	HOSE	1C08
548169	SPRING	1L04
548205	BUSH	1J15
548205	BUSH-ROAD SPRING	1J16
548205	BUSH-ROAD SPRING SHACKLE	1J17
548205	BUSH-ROAD SPRING SHACKLE	1J18
549168	PIVOT SHAFT	1H12
549169	BOLT	1H12
549200	SHIM	1H09
549201	PIVOT SHAFT	1H12
549229	NIPPLE	1J02
549229	NIPPLE-GREASE	1J03
549229	GREASE NIPPLE	1J04
549229	NIPPLE-GREASE	1J14
549230	SHIM	1J08
549232	SHIM	1J08

PART NUMBER	DESCRIPTION	REF.NO.
549234	SHIM	1J08
549236	SHIM	1J08
549238	SHIM	1J08
549240	SHIM	1J08
549242	SHIM	1J08
549244	SHIM	1J08
549246	SHIM	1J08
549248	SHIM	1J08
549250	SHIM	1J08
549252	SHIM	1J08
549473	CIRCLIP	1J11
549473	CIRCLIP	1J13
549475	NUT	1J10
549610	ADAPTOR	2E02
549610	ADAPTOR	2E03
549611	DISTRIBUTOR DRIVE COUPLING	2E02
549611	COUPLING DISTRIBUTOR DRIVE	2E03
549702	CUP PLUG	1C11
549761	FUEL PUMP-MECHANICAL	1N06
549840	SPANNER	2L11
549909	PLUG	1C04
549909	PLUG-OIL RELIEVE VALVE	1E04
549911	BUSH CRANKSHAFT	1F03
550732	MASTER CYLINDER	1G04
550732	CYLINDER-CLUTCH MASTER	2L12
551349	BATTERY LEAD TO SOLENOID	2F12
551436	SPECIAL SCREW	2F03
551508	SWITCH	2F09
551595	REAR REFLECTOR	2F05
551652	PIPE-BRAKE	1L09
551714	SHROUD FOR FAN COWL	2D02
551884	ATTACHMENT PLATE	2L02
552097	BELL CRANK LEVER ASSEMBLY	1O08
552129	HINGE CENTRE	2I02
552132	BRACKET	2I02
552133	BRACKET	2H16
552133	BRACKET	2I02
552174	FUEL TANK	1O02
552175	FUEL TANK	1O02
552223	TORSION SPRING	1O08
552388	STEERING DAMPER MOUNTING BRACKET RH STG	1K07
552407	BRAKE ROD	1L15
552435	PIPE TANK TO PUMP	1N11
552436	PIPE TANK TO PUMP	1N11
552436	FUEL PIPE	1N13

PART NUMBER	DESCRIPTION	REF.NO.
552436	FUEL PIPE	1N13
552517	INLET PIPE	1D10
552520	BRACKET-ACC PEDAL	1009
552524	BRACKET	1010
552526	CONTROL ROD	1010
552574	STEERING DAMPER MOUNTING BRACKET LH STG	1K07
552578	CROSS SHAFT	1L15
552583	RATCHET	1L14
552681	CLIP-FUEL PIPE	1N12
552681	CLIP	1N13
552681	CLIP	1N13
552720	HEAT SHIELD	2C10
552784	BRACKET ASSEMBLY	1010
552804	SPECIAL NUT	1K02
552805	DISTANCE PIECE	1L14
552818	BUSH	1J16
552819	BUSH FOR SHOCK ABSORBER	1J16
552856	PLUNGER	1L14
552857	WASHER	1L14
552858	SUPPORT PLATE	1L15
552975	BRACKET-ACC PEDAL	1009
552980	SHAFT AND LEVER	1010
552989	SHAFT AND LEVER	1010
553000	PROP SHAFT FRONT 4 CYL	1J02
553084	BLOCK	1H04
553084	BLOCK	1H06
554049	CLIP	1M08
554049	CLIP FIXING FUEL TRAP TO	2L17
554163	WASHER JOINT	1C08
554163	WASHER JOINT	1C09
554163	JOINT WASHER	1M04
554175	ADAPTOR	1M04
554260	CLIP WATER HOSE	1D09
554260	CLIP	1E12
554260	CLIP-BATTERY BOX TUBE	2G04
554260	CLIP	2L12
554260	CLIP	2L14
554260	CLIP	2L15
554260	CLIP-HOSE	2L16
554383	ELBOW	1N02
554414	CARB ELBOW	1C08
554418	HOSE	1N02
554423	CLIP FOR FUEL PIPE	1N11
554541	COVER ASSY	1C07
554541	FRONT COVER	1E08

PART NUMBER	DESCRIPTION	REF.NO.
554602	ROCKER BRACKET	1C06
554621	SET BOLT (0.50" UNF X 5.1875")	1C11
554832	TUBE-OIL LEVEL ROD	1D08
554834	OIL LEVEL ROD	1D08
554924	FRONT COVER ASSY	1D09
555711	GROMMET	1O14
555711	GROMMET	2F15
555711	GROMMET-RUBBER-RED	2L09
555835	FUEL GAUGE	2F08
555837	IGNITION WARNING LIGHT LENS	2F08
555844	GAUGE UNIT	1O02
555845	GAUGE UNIT	1O02
555846	GAUGE UNIT	1O02
555846	FUEL GAUGE UNIT	1O04
555847	GAUGE UNIT	1O02
555877	SWITCH	2F09
556010	3RD SPEED GEAR	1H04
556239	SPRING	1I03
556379	RETAINING PLATE	1H03
556445	SPIROLOX RING FOR FRONT AXLE	1J10
556449	PROP SHAFT FRONT 6 CYL	1J02
556508	BLEED SCREW-CLUTCH PIPE	1G05
556508	BLEED SCREW-CLUTCH CYLINDER	1G05
556508	SCREW-BLEED	1L03
556508	SCREW-BLEED	1L04
556508	BLEED SCREW	1L02
556570	PLUG FOR SELECTOR SPRING	1H03
556628	DISTANCE PIECE-FRONT AXLE	1J10
556633	WASHER-THRUST,CONCAVE	1I10
557523	LOCKER	1C04
557523	WASHER-LOCK	1D06
557523	WASHER-LOCK	1E05
557782	BANJO	1D11
558168	HOT PLUG	1E11
558302	OIL FEED PIPE TO CYLINDER HEAD	1D11
559128	LEAD	2F15
559141	LEAD	2F10
559168	CLIP	1N12
559563	PIN	1L14
559636	TOWING JAW AND PINTLE	2L03
559705	PLATE-EXHAUST MOUNTING TO PIPE	2C03
559705	MTG BRACKET FOR EXHAUST PIPE ¢LHS	2C05
559705	PLATE-EXHAUST MOUNTING TO PIPE	2C10
559705	PLATE	2C11
560223	SPECIAL BOLT	1L06

PART NUMBER	DESCRIPTION	REF.NO.
560567	CABLE	2F12
560744	GAUGE PANEL COMPLETE	2F08
560746	WATER TEMPERATURE GAUGE	2F08
560794	WATER TEMP TRANSMITTER	1C11
560794	SWITCH-WATER THERMOSTAT	1D11
560794	SWITCH-WATER TEMPERATURE	1E11
560887	WHEELBOX FOR WIPER	2F06
560967	NUT PLATE	2F06
561195	STUD SHORT	1J02
561195	BOLT-SPECIAL	1J03
561195	BOLT-SPECIAL	1J12
561196	STUD LONG	1J02
561196	BOLT-SPECIAL	1J03
561196	BOLT-SPECIAL	1J12
561197	SHIM	1H07
561221	SPRING	1H12
561368	OIL CATCHER	1L05
561434	BOLT(0.375" WHIT X 1.90625)	1H03
561699	SEAL-OIL	1I09
561856	JOINT WASHER	1L05
561954	BUSH FOR REVERSE WHEEL	1H05
561954	BUSH-REVERSE GEAR	1H06
562019	PRESSURE GAUGE	2L11
562481	CLEVIS PIN	1O13
562481	CLEVIS PIN FOR ACCELERATOR SHAFT	1O12
562637	'U' BOLT	1J15
562641	'U' BOLT FRONT SPRING	1J15
562654	BRACKET	1D03
562670	BRACKET	1O10
562717	SPRING	1O10
562731	SILENCER RH STG	2C06
562731	SILENCER AND TAIL PIPE	2C07
562737	EXHAUST SILENCER	2C10
562763	HEAT SHIELD MTG BRKT BOTTOM	2C09
562781	HEAT SHIELD	2C10
562785	INTERMEDIATE EXHAUST PIPE	2C10
562823	PIPE CLAMP	2C10
562823	CLAMP	2C11
562858	FRONT EX PIPE	2C03
562875	SHAFT	1K05
562885	FRONT EXHAUST PIPE COMPLETE	2C10
562912	EXTERIOR MIRROR COMPLETE	2G07
562915	WATER HSE PUMP TO INLET PIPE	1D10
562940	GASKET-PEDAL BRACKET	1G04
562940	GASKET	1L06

PART NUMBER	DESCRIPTION	REF.NO.
562944	COWL FOR FAN	2D02
562953	'J' BOLT	2G04
562979	DRIVE SCREW	2D02
562979	DRIVE SCREW	2D03
563037	IMPELLOR	1D09
563038	JOINT WASHER	1D10
563047	WATER PIPE	1D03
563050	WEDGELOK SCREW	1D10
563122	THERMOSTAT	1D11
563132	FAN BELT	1C10
563132	BELT-FAN	1E09
563145	CHAIN WHEEL	1D06
563146	FUEL PUMP	1N10
563154	ADAPTOR	1D10
563165	PIPE	1N13
563165	PIPE	1N13
563166	PIPE	1N13
563166	PIPE	1N13
563167	PIPE	1N13
563167	PIPE	1N13
563168	PIPE	1N13
563168	PIPE	1N13
563190	FUEL FILTER	1N10
563195	UNION	1N10
564157	JOINT WASHER	1D10
564163	TIMING POINTER	1D09
564164	TUBE	1D09
564165	CONNECTOR	1D10
564197	WATER PUMP	1D09
564215	SUMP	1D08
564258	'O'RING ENGINE OIL FILLER CAP	1C12
564258	'O'RING-OIL FILLER CAP	1F10
564267	PULLEY	1D10
564270	HUB	1D09
564307	JOINT WASHER	1C13
564308	CLAMP	1C13
564308	CLAMP-EXHAUST MANIFOLD	1E13
564332	INJECTOR COMPLETE	1N10
564335	OIL PUMP COVER	1D05
564375	CRANKSHAFT PULLEY	1C03
564375	PULLEY-CRANKSHAFT	1E03
564394	FLYWHEEL HOUSING	1G02
564446	ADAPTOR	1M05
564447	WASHER	1N02
564456	SPRING	1C04

PART NUMBER	DESCRIPTION	REF.NO.
564456	SPRING-OIL RELIEVE VALVE	1E04
564463	CHAIN WHEEL	1D04
564467	BAFFLE PLATE	1E09
564470	TIMING POINTER	1E09
564495	DISTRIBUTOR PUMP	1N10
564574	STUD	1C11
564603	PIPE	1M05
564704	FRONT BUMPER	2G02
564718	OVERFLOW BOTTLE	2D02
564719	CAP FOR OVERFLOW BOTTLE	2D02
564720	HOSE RADIATOR TO OVERFLOW BOTTLE	2D02
564724	FLEXIBLE PIPE OVERFLOW BTLE OUTLET	2D02
564792	EXTENSION SHAFT	1010
564793	EXTENSION SHAFT	1010
564794	CONTROL ROD	1010
564797	CONTROL ROD	1010
564813	PEDAL SHAFT	1L06
564816	PEDAL BUSH	1L06
564825	WASHER SPRING	1K05
564893	PACKING PIECE	1N03
564898	PIPE	1N13
564898	PIPE	1N13
564899	PIPE	1N13
564899	PIPE	1N13
564902	PIPE	1N13
564902	PIPE	1N13
564905	PIPE	1N13
564905	PIPE	1N13
564907	PIPE	1N13
564907	PIPE	1N13
564911	BRACKET FOR ACCELERATOR CONTROL	1012
564944	PACKING PIECE	1L07
564944	PACKING PIECE	1L07
564962	PIPE	1N13
564962	PIPE	1N13
564999	JOINT WASHER FOR FILLER CAP	2D02
565434	PLUG SPANNER	2L11
565443	TOMMY BAR	2L11
565466	BRAKE PIPE MASTER CYLINDER	1L09
565656	HOSE CLIP	1N17
565656	CLIP ELBOW TO TEE PIECE	2K14
565656	CLIP	2L15
565668	CONNECTOR TUBE	1L07
565668	CONNECTOR TUBE BRAKE PIPE TO	1L07
565719	4 WAY CONNECTION FOR BRAKE	1L09

PART NUMBER	DESCRIPTION	REF.NO.
566222	RUBBER-ENGINE MOUNTING	1F02
566222	RUBBER-GEARBOX MOUNTING	1I05
566222	RUBBER-GEARBOX MOUNTING	1I05
566222	MOUNTING RUBBER	1I05
566426	ACCELERATOR CABLE	1O13
566851	FLYWHEEL ASSEMBLY	1G03
566859	DISTRIBUTOR CAP	2E02
566957	BREATHER PIPE	1D09
567959	MOUNTING CLIP	2F09
568055	SWITCH-WATER TEMPERATURE	1F07
568189	PETROL PUMP ELECTRIC	1N08
568244	EARTHING BRAID STRIP UPPER	1N08
568244	EARTH STRIP	1N08
568301	SEAL-WATER PUMP	1D09
568333	CHAIN WHEEL	1C03
568333	CHAINWHEEL-CRANKSHAFT	1E03
568335	HEATER PLUG	1E11
568364	JOINT WASHER	1M05
568364	JOINT WASHER-CARBURETTER ADAPTOR	1M07
568364	JOINT WASHER FOR ADAPTOR	2L17
568365	JOINT WASHER	1M05
568365	JOINT WASHER-CARBURETTER ADAPTOR	1M07
568380	ADAPTOR	1N02
568391	HOSE	1D12
568392	CLIP	1D12
568431	RING GEAR	1G03
568457	ADAPTOR TEMP TRANSMITTER	1C11
568474	CHAINWHEEL FOR CAMSHAFT	1C05
568475	PUSH ROD	1D07
568542	COVER	1E09
568550	VALVE SPRING	1C06
568550	SPRING-VALVE	1E06
568575	OLIVE	1N12
568664	STUD	1C13
568664	STUD	1E13
568686	VALVE GUIDE-INLET	1C11
568687	VALVE GUIDE-EXHAUST	1C11
568688	VALVE GUIDE ASSEMBLY	1E11
568689	VALVE GUIDE ASSEMBLY	1E11
568725	COVER ASSEMBLY	1D12
568786	EXHAUST VALVE	1D07
568788	PULLEY ALTERNATOR 2.25 LITRE	2E10
568788	PULLEY-ALTERNATOR	2E14
568789	ALTERNATOR ADJUSTING LINK	2E11
568789	LINK-ALTERNATOR ADJUSTING	2E15

PART NUMBER	DESCRIPTION	REF.NO.
568802	SUPPORT FOR FUEL TANK	1O05
568805	AIR CLEANER	1N03
568858	RUBBER BUSH	1K08
568858	STEM RUBBER FOR STEERING DAMPER	1K07
568883	SPINDLE-CLUTCH PEDAL	1G04
568883	TRUNNION	1L06
568893	PEDAL & BRACKET ASSEMBLY	1G04
568894	PEDAL & BRACKET ASSEMBLY	1G04
568895	PEDAL AND BUSHES	1G04
568896	PEDAL AND BUSHES	1G04
568916	COWL FOR FAN	2D02
568917	SHROUD FOR FAN COWL	2D02
569005	STEERING DAMPER	1K07
569028	'U' BOLT	1J15
569047	PLUG-WATER DRAIN	1C02
569047	PLUG-WATER DRAIN	1E02
569047	DRAIN PLUG FOR RADIATOR	2D02
569054	BRAKE PEDAL & BRACKET ASSY	1L06
569055	PEDAL BRACKET	1L06
569057	PEDAL BRACKET	1L06
569058	BRACKET	1L06
569084	BRAKE PEDAL & BRACKET ASSY	1L06
569085	PEDAL BRACKET	1L06
569086	PEDAL & BUSHES	1L06
569096	NYLON SPACER	1L07
569096	SPACER FOR MASTER CYLINDER	1L07
569117	END STOP	1L06
569117	END STOP-SWITCH TO HANDBRAKE	2L13
569201	SWITCH PROTECTOR PLATE	1L06
569204	WHEEL-ROAD	1J18
569212	SHROUD FOR FAN COWL	2D02
569291	SPRING	1L06
569291	SPRING-BRAKE-PEDAL RETURN	2L13
569338	SERVO UNIT	1L07
569339	CYLINDER-BRAKE MASTER	1L07
569434	PIPE	1L07
569492	GROMMET	2K14
569522	PACKING PIECE	1K04
569584	SWITCH LEVER	1L06
569601	PEDAL BRACKET	1L06
569606	BRACKET	1L06
569609	NYLON BUSH	1L06
569609	BUSH-STOP LIGHT MOUNTING	2L13
569652	PEDAL & BRACKET ASSEMBLY	1L06
569652	BRAKE PEDAL AND BRACKET	2L13

PART NUMBER	DESCRIPTION	REF.NO.
569687	WHEEL NUT WRENCH	2L11
569693	FRONT EXHAUST PIPE	2C10
569701	SPRING-CLUTCH PEDAL	1G04
569701	RETURN SPRING	1L06
569701	SPRING-CLUTCH PEDAL	2L12
569746	BUSH SPRING	1J15
570091	PIPE-BRAKE REAR TO TEE PIECE	1L09
570351	CLIP CUTOUT SWITCH CAPILLARY TUBE	2F06
570753	FLANGE FINISHER	2H02
570753	FLANGE FINISHER	2H05
570753	FLANGE FINISHER	2H07
570822	BULB	2F03
570822	BULB-NUMBER PLATE LAMP	2F04
571043	SELECTOR PAD	1I12
571059	SEAL	1H03
571059	SEAL-OIL-GEARBOX	1H04
571059	SEAL-OIL	1I03
571059	SEAL-OIL	1I06
571062	BEARING-ROLLER	1I06
571063	WASHER-THRUST	1I06
571064	BEARING-THRUST	1I06
571065	WASHER-THRUST	1I06
571066	WASHER-THRUST GEARBOX	1I06
571067	BEARING-THRUST GEARBOX	1I06
571090	CIRCLIP	1I06
571134	SPINDLE	1I03
571137	GASKET-FRONT COVER AND OIL PUMP	1I03
571139	RETAINER	1I03
571142	SEAL-OIL	1I06
571144	CIRCLIP	1I09
571144	CIRCLIP	1I09
571145	ROLL PIN	1H11
571145	ROLL PIN	1I12
571146	BALL-STEEL	1I10
571146	BALL-STEEL	1I12
571158	ROLL-PIN	1I10
571158	ROLL PIN	1I12
571160	PUSH ROD-CLUTCH CYLINDER	1G05
571161	INSERT CLUTCH RELEASE LEVER	1G05
571163	CLIP CLUTCH RELEASE LEVER	1G05
571164	CAP-CLUTCH RELEASE LEVER	1G05
571164	CAP CLUTCH RELEASE LEVER PIVOT	1H03
571168	PLUG	1I03
571174	WASHER-PLAIN	1I10
571175	SEAL-OIL	1I10

PART NUMBER	DESCRIPTION	REF.NO.
571177	EXCLUDER-MUD	1I10
571187	BEARING-ROLLER	1I06
571235	DRIVING MEMBER	1J10
571439	SPRING	1I12
571447	BOLT	1J04
571452	SHIM	1I06
571453	SHIM	1I06
571454	SHIM	1I06
571455	SHIM	1I06
571468	WASHER-SPACING	1I11
571661	TOLERANCE RING	1H11
571665	SEAL-OIL	1I11
571682	CIRCLIP	1I11
571711	DRIVING MEMBER	1J10
571711	DRIVING MEMBER	1J11
571711	DRIVE MEMBER-REAR AXLE	1J13
571718	SEAL-OIL	1J05
571723	WASHER-PLAIN	1I04
571723	WASHER-THRUST	1I06
571732	SLEEVE-EXTENSION-FRONT COVER	1I03
571770	INNER MEMBER TRANSFER CHANGE SPEED	1H07
571837	JOINT WASHER	1I04
571838	SEAL-OIL	1I06
571841	GASKET-GEARBOX SIDE COVER	1I04
571846	GASKET-REAR MAIN BEARING HOUSING	1I04
571855	SELECTOR ROD	1H12
571875	LOCK-UP DOG-TRANSFER BOX	1I10
571876	GASKET	1I05
571885	WASHER-THRUST	1I09
571885	WASHER-THRUST	1I09
571922	WASHER	1J10
571930	WASHER-THRUST	1I06
571931	WASHER-THRUST GEARBOX	1I06
571940	GASKET-REAR COVER	1I05
571944	PLUG-GEARBOX	1I04
571947	HOUSING-VACUUM ACTUATOR	1I05
571956	SELECTOR FORK	1I10
571957	VACUUM ACTUATOR	1I10
571959	HOUSING-VACUUM ACTUATOR	1I05
571962	PLUNGER-SELECTOR-SHAFT	1I12
571969	WASHER-PLAIN-SPECIAL	1L05
571970	SHIELD-OIL	1I11
571971	CATCHER-OIL-TRANSMISSION	1L05
571977	COVER-BOTTOM-TRANSFER CASING	1I04
571979	GASKET-TOP COVER	1I05

PART NUMBER	DESCRIPTION	REF.NO.
571980	PIN-DETENT SPRING	1I12
571981	SHAFT-GEAR CHANGE	1I12
571982	LEVER-GEAR SELECTOR	1I12
571983	LEVER-GEAR SELECTOR	1I12
571991	SEAL-OIL	1I10
572166	RUBBER BUSH	2C11
572167	RUBBER BUSH	2C11
572168	INSULATING WASHER	2C11
572313	DISTANCE TUBE	2D03
572535	ADAPTOR	1N08
572535	REDUCER ADAPTOR FOR FUEL PIPES	1N08
572541	HOSE CLIP	1N05
572548	CORBIN CLIP	1L07
572772	HOSE PIPE TO MASTER CYLINDER	1L07
572839	HOSE CLIP FUEL PIPES	1N11
572839	CLIP-FUEL PIPE HOSE	1N12
572839	HOSE CLIP	1N14
572839	HOSE CLIP-FUEL BREATHER PIPE	1N17
572839	CLIP-BREATHER HOSE	1O03
572839	HOSE CLIP-FUEL BREATHER PIPE	1O04
572839	CLIP-BREATHER HOSE	1O06
572839	CLIP-BREATHER CONNECTION	2L14
572839	CLIP	2L15
572994	TRUNNION PIN	1N04
573038	IGNITION COIL	2F09
574044	FAN BLADE	1D10
574048	STUD	1C13
574048	STUD	2L12
574262	CONNECTING PIPE	1C08
574264	BRACKET	1C08
574654	CLIP	1E12
574656	CONNECTING TUBE	1E13
574658	BREATHER FILTER	1E12
574661	INLET MANIFOLD	1E13
574749	ADAPTOR ASSEMBLY	1C08
574750	HOSE	1C08
574855	BRACKET-ALTERNATOR FIXINGS	2E15
574855	MOUNTING BRACKET FOR ALTERNATOR	2E11
574871	HOSE	1C10
574871	HOSE-WATER	1E10
574878	RUBBER SLEEVE-SUCTION PIPE	1M04
574878	CONNECTOR-RUBBER-VACUUM PIPE	1M05
574948	SPACER FRONT COVER	1E08
574948	SPACER ALTERNATOR ADJUSTING LINK	1C07
575014	SPRING WASHER	2F12

PART NUMBER	DESCRIPTION	REF.NO.
575047	OUTER CASING	2F06
575092	LEAD COIL TO CARBURETTER SOLENOID	2L12
575123	FLASHER LAMP COMPLETE	2F04
575125	FLASHER LAMP COMPLETE	2F04
575146	SWITCH	2F15
575166	MECHANICAL STOP SWITCH	1L06
575166	SWITCH-STOP LIGHT-MECHANICAL	2L13
575312	BULB	2F04
575373	MAIN HARNESS RHD	2F10
575383	INDICATOR HEADLAMP DIP AND	2F09
575390	BRKT FOR COMBINED SWITCHES	2F09
575395	FUSE UNIT BOX	2F09
575396	FUEL LEVEL WARNING LIGHT	2F07
575408	MAIN HARNESS LHD	2F10
575437	WIPER BLADE	2F06
575457	FRONT FLASHER LAMP	2F04
575651	BRACKET-GEARBOX MOUNTING	1I05
575651	MOUNTING BRACKET	1I05
575718	TOP HOSE	2D04
576137	CLUTCH RELEASE LEVER ASSY	1G05
576149	RETAINER	1I12
576149	RETAINER	1I12
576159	PIN	1J07
576195	GASKET-GEAR TOP COVER	1I04
576201	LOW GEAR WHEEL	1H07
576203	STAPLE CLUTCH LEVER TO	1G05
576209	OUTER MEMBER-TRANSFER CHANGE SPEED	1H07
576210	TRANSFER GEAR CHANGE LEVER	1H13
576220	FILTER-OIL-GEARBOX	1I04
576236	SHIM	1J08
576237	SHIM	1J08
576238	SHIM	1J08
576239	SHIM	1J08
576316	KNOB	1H11
576319	BOLT-SPECIAL	1I13
576320	PLUG-RETAINING GEAR LEVER	1I13
576340	OIL PUMP AND FRONT COVER	1I03
576342	GEAR AND SPINDLE-OIL PUMP	1I03
576343	LAYSHAFT CLUSTER	1I09
576351	SHIM	1I09
576352	SHIM	1I09
576353	SHIM	1I09
576354	SHIM	1I09
576355	SHIM	1I09
576356	SHIM	1I09

PART NUMBER		DESCRIPTION	REF.NO.
576357		SHIM	1I09
576358		SHIM	1I09
576359		SHIM	1I09
576360		SHIM	1I09
576361		SHIM	1I09
576362		SHIM	1I09
576363		SHIM	1I09
576364		SHIM	1I09
576365		SHIM	1I09
576366		SHIM	1I09
576367		SHIM	1I09
576368		SHIM	1I09
576369		SHIM	1I09
576370		SHIM	1I09
576476		COVER-CLUTCH	1G03
576521		BOLT(0.375 BSF X 1.375)	1J05
576521		BOLT-SPECIAL	1L02
576521		BOLT	1L04
576522		BOLT 0.375 BSF X 1.50"	1J05
576557		CLUTCH COVER COMPLETE	1G02
576557		CLUTCH COVER	1G03
576583		SWIVEL PIN UPPER COMPLETE	1J06
576627		HUB-OUTPUT GEAR	1I11
576656		LEVER-SELECTOR	1I12
576683		BEARING-INTERMEDIATE GEARS	1I09
576686		LAYSHAFT CLUSTER-ALL SYNCHRO GEARBOX	1H05
576703		FORK	1H11
576704		FORK	1H11
576707		REVERSE GEAR	1H05
576714		BELL HOUSING	1H02
576717		SERRATED BOLT-0.3125 ¢BSF X 2 LONG	1H03
576718		FRONT COVER ASSY GEARBOX	1H03
576720		PIVOT-CLUTCH RELEASE	1G05
576720		PIVOT PIN CLUTCH RELEASE	1H03
576723		CLIP	1G05
576724		JOINT WASHER G/BOX FRT COVER	1H03
576725		MAINSHAFT	1H04
576726		MAINSHAFT	1H04
576729		SELECTOR SHAFT	1H11
576730	R	GEARBOX ASSEMBLY REBUILT	1H02
576734		BUSH	1H04
576735		THRUST WASHER	1H04
576751		PUSH ROD SLAVE CYLINDER	1G05
576761	R	GEARBOX ASSEMBLY REBUILT	1H02
576762		BELL HOUSING	1H02

PART NUMBER	DESCRIPTION	REF.NO.
576767	HALF SHAFT	1J13
576768	HALF SHAFT	1J13
576777	HALFSHAFT AND JOINT RH FOR	1J05
576778	HALFSHAFT AND JOINT LH FOR	1J05
576779	ROLL-PIN	1I12
576825	STUD	1J10
576825	STUD	1J11
576825	STUD	1J13
576843	BAFFLE-GEARBOX BREATHER	1I05
576844	HUB ASSEMBLY	1J10
576844	HUB-REAR	1J13
576895	LOCK TAB	1J07
576907	DISTANCE PIECE FOR BEARING	1H05
576973	BRAKE DRUM	1L04
576973	BRAKE DRUM	1L03
576974	BRAKE DRUM	1L03
577020	BATTERY FRAME	2G04
577095	OPERATING LEVER HAND CONTROL	1014
577098	BASE PLATE FOR HAND CONTROL	1014
577111	KNOB FOR HAND CONTROL	1014
577127	SHFT LEVER FOR HAND-CONTROL	1014
577137	SHAFT HAND BRAKE LEVER	1L15
577138	WASHER PLATE	1L15
577230	CNTRL ROD PEDAL TO RELAY AND ENGINE	1008
577258	BRACKET FOR ACCELERATOR CONTROLS	1008
577262	BRACKET FOR STG COLUMN MTG	1K04
577271	BOLT SELF LOCK STEERING UNIT	1K04
577272	BOLT SELF LOCK STEERING UNIT	1K04
577304	ACCELERATOR RELAY SHAFT	1007
577304	SHAFT-ACCELERATOR LEVERS	1011
577338	SEALING PAD FOR HAND-CONTROL	1014
577342	COWL FOR FAN	2D02
577346	HOSE FOR RADIATOR TOP	2D02
577354	WASHER	1L15
577383	RADIATOR BLCK ASSY-(LESS-COWL)	2D02
577384	PROTECTION PLATE FOR PIPE	2K14
577384	PLATE-FUEL PIPE PROTECTION	2L15
577414	CROSSMEMBER NO 3 ASSEMBLY	2G02
577458	RUBBER ELBOW JOINING PIPES	1N17
577458	ELBOW-RUBBER	2L14
577458	ELBOW-RUBBER-JOINING PIPES	2L15
577459	RUBBER CONNECTION	2K14
577464	ELBOW	2K14
577464	ELBOW	2L15
577465	CONNECTOR	2K14

PART NUMBER	DESCRIPTION	REF.NO.
577465	CONNECTOR	2L15
577466	BREATHER HOSE	2K14
577466	HOSE-BREATHER	2L15
577472	DUST SHIELD FOR OUTER COLUMN	1K02
577609	RADIATOR 4 CYLINDER	2D02
577664	PIPE SUPPLY TANK TO BRAKE	1L07
577664	PIPE-SUPPLY TANK TO BRAKE	1L07
577665	PIPE-SUPPLY TANK TO BRAKE	1L07
577665	PIPE-SUPPLY TANK TO MASTER	1L07
577679	BRAKE PIPE RH JUMP HOSE TO	1L09
577681	BRAKE HOSE FRONT	1L09
577687	BRAKE PIPE COMPLETE CLUTCH MASTER	1G04
577694	PIPE-MASTER CYLINDER TO	1L07
577695	PIPE-MASTER CYLINDER TO	1L07
577697	MOUNTING BRACKET-JUMP HOSE	1L09
577697	MOUNTING BRACKET	1L10
577697	MOUNTING BRACKET	1L11
577697	BRACKET-JUMP HOSE	1L12
577697	MOUNTING BRACKET	1L13
577844	HOSE-SERVO TO MANIFOLD	1L07
577846	SHIELD-HEAT RH	1F02
577874	STEADY STRIP FOR SHROUD	2D02
577898	CLIP FOR TIE ROD BALL JOINT	1K06
577898	CLIP-STEERING TUBES	1K07
577898	CLAMP	1K08
577927	CLIP FOR TRACK ROD	1K06
578023	SPECIAL NUT 0.25" ¢UNF	1N04
578086	HOSE-SERVO TO MANIFOLD-LHSTG	1L07
579006	WIPER WASHER SWITCH	2F09
579014	CABLE PETROL PUMP FEED	2F10
579023	WARNING LIGHT DIRECTION INDICATORS	2F07
579025	LEAD FOR SOLENOID SWITCH	2F12
579027	SWITCH WIPER	2F09
579054	LEAD FOR ROOF LAMP RH STG	2F06
579058	LEAD FOR ROOF LAMP LH STG	2F06
579121	INSPECTION LIGHT SOCKET RED	2F09
579122	INSPECTION LIGHT SOCKET BLACK	2F09
579198	SPEEDOMETER MPH	2F08
579243	LEAD TO DISTRIBUTOR	2F10
586440	CLIP PIPE	1F10
586742	SWITCH-OIL PRESSURE	1F05
587001	SHIELD	2E04
587077	MTG BRKT REAR FOR ALTERNATOR 2-LITRE	2E13
587078	MTG BRKT FRONT FOR ALTERNATOR	2E13
587080	SPACER FOR ALTERNATOR BRKT	2E13

PART NUMBER	DESCRIPTION	REF.NO.
587095	SHIELD	2C02
587104	HOSE FLAME TRAP TO CARBURETTER	1D09
587105	HOSE	1D09
587119	CLIP-HOSE	2L16
587119	CLIP PIPE TO ROCKER COVER	2L12
587120	HOSE ELBOW TO FLAME TRAP	2L16
587338	SET BOLT 0.4375UNF X 5.15625	1D12
587339	PLAIN WASHER-CYL HEAD BOLT	1D12
587401	EXHAUST MANIFOLD ASSY	1D13
587405	PLAIN WASHER	1C13
587433	ADJUSTING LINK FOR	2E13
587463	WATER OUTLET PIPE 2 6 LITRE	1D11
587468	DRIVING BELT	1D10
587499	MOUNTING BRACKET FOR VACUUM SWITCH	2L15
587502	BANJO BOLT	1C13
587502	BANJO BOLT	2L15
587517	SERVO ADAPTOR	2L15
587522	PULLEY FOR ALTERNATOR 2 6 LITRE	2E12
587622	SUPPORT PLATE	1G04
587628	CUP PLUG	1C02
587628	CORE PLUG	1E02
587653	AIR CONTROL VALVE.	1N06
587659	FUEL PIPE FILTER TO CARBURETTER	1N12
587684	FUEL PIPE PETRO-FLEX PIPE	1N11
587686	FUEL PIPE AND CONNECTION	1N11
587723	PLUG 0.50 UNF	1D13
587726	STUD INLET MANIFOLD	1C13
587923	PLUG	1D08
587986	HOSE BREATHER TO THROTTLE BODY	1E12
589018	CABLE ASSEMBLY	2F04
589026	CABLE ASSY NO PLATE LAMP	2F04
589033	CABLE ENGINE HARNESS	2F10
589034	CABLE ENGINE HARNESS DIESEL	2F11
589035	CABLE ENGINE HARNESS	2F10
589063	SWITCH-HANDBRAKE	2L13
589115	BRACKET FOR CHOKE CONTROL	1014
589202	LENS-FLASHER-REAR	2F04
589208	SADDLE-BRKT FOR STARTER-SWITCH	1014
589210	LEAD SHUTTLE VALVE SWITCH	2L13
589219	SWITCH,VACUUM LOSS	2F13
589219	VACUUM LOSS SWITCH	2L13
589223	SWITCH,PEDAL TRAVEL	2F13
589283	SIDE LAMP LENS	2F03
589284	SIDE LAMP LENS	2F03
589285	FRONT FLASHER LAMP LENS	2F04

PART NUMBER	DESCRIPTION	REF.NO.
589289	CLIP	2L08
589403	SIDE LAMP COMPLETE	2F03
589404	SIDE LAMP COMPLETE	2F03
589409	FRONT FLASHER LAMP COMPLETE	2F04
589414	LAMP-FLASHER-REAR	2F04
589419	STOP TAIL LAMP	2F03
589420	LENS FOR STOP TAIL LAMP	2F03
589446	STOP/TAIL LAMP COMPLETE	2F03
589448	STOP/TAIL LAMP LENS	2F03
589452	GROMMET	2L09
589553	STRIKER ASSEMBLY	1K02
589665	RELAY-STARTER	2F09
589665	RELAY	2F13
589705	CABLE ASSEMBLY CHASSIS HARNESS	2F10
589706	CABLE ASSEMBLY CHASSIS HARNESS	2F10
589707	CABLE ASSEMBLY CHASSIS HARNESS	2F10
589708	CABLE CHASSIS HARNESS	2F11
589709	CABLE CHASSIS HARNESS	2F11
589710	CABLE CHASSIS HARNESS	2F11
589806	CLIP	1G04
589806	CLIP-PIPE	1N12
589812	STOP TAIL LAMP	2F03
589812	LAMP-STOP TAIL	2F03
589851	CABLE ENGINE HARNESS	2F10
589853	CABLE ENGINE HARNESS	2F10
589872	HEAVY CABLE BATTERY-EARTH NEGATIVE	2F12
589877	REFLECTOR	2F05
589878	LEAD STARTER MOTOR TO EARTH	2F12
591039	BRAKE DRUM	1L04
591039	BRAKE DRUM 88	1L02
591231	SLAVE CYLINDER	1G05
591278	PROPELLOR SHAFT	1J03
591279	REAR PROPELLOR SHAFT	1J14
591283	REAR PROPELLOR SHAFT	1J14
591290	PLUG-CUP	1I04
591320	SPRING	1I12
591345	WASHER-PLAIN	1I10
591362	GEAR 1ST MAINSHAFT	1H04
591363	2ND SPEED GEAR	1H04
591364	SYNCHRO CONE	1H04
591378	AXLE SHAFT	1J12
591379	AXLE SHAFT	1J12
591394	RING-OIL FEED	1I03
591429	REAR OUTPUT SHAFT	1H07
591519	SPRING PIN-REVERSE GEAR SHAFT	1H05

PART NUMBER	DESCRIPTION	REF.NO.
591527	SHAFT FOR REVERSE GEAR	1H05
591603	SOUND DEADNING-G/BOX TOP COV	1I05
591891	GEAR-LOW RANGE	1I09
591900	WASHER-THRUST	1I09
591988	BACKING PLATE SEALING GASKET	1G05
592177	PLATE BOTTOM-ROAD SPRING	1J16
592179	PLATE-BOTTOM-ROAD SPRING	1J18
592179	BOTTOM PLATE	1J17
592182	'U' BOLT	1J17
592183	U BOLT	1J18
592184	U BOLT	1J16
592185	U BOLT	1J16
592219	JACK ROD	2L11
592269	DISTANCE PLATE-FUEL FILTER	1N09
592269	DISTANCE PIECE-FILTER BOWL	2L15
592306	DISTANCE PIECE	1O07
592306	PCKNG-ACCELERATOR X-SHAFT	1O11
592309	FUEL PIPE PUMP TO FILTER	1N12
592324	NYLON FILTER FOR SUPPLY TANK	1L07
592324	FILTER	1L08
592324	FILTER-BRAKE FLUID RESERVOIR	2L13
592325	FILTER-NYLON-SUPPLY TANK	1L07
592325	FILTER-NYLON-SUPPLY TANK	1L07
592326	PETROL CATCH TANK	2K14
592326	TANK	2L15
592358	GASKET-MASTER CYLINDER	1G04
592358	GASKET-BRAKE MASTER CYLINDER	1L07
592358	GASKET BRAKE AND CLUTCH	1L07
592358	GASKET-CLUTCH MASTER	2L12
592364	BRAKE PIPE COMPLETE TO FRONT	1L09
592374	PIPE-LH REAR TO TEE PIECE	1L09
592375	PIPE-RH REAR TO TEE PIECE	1L09
592564	MOUNTING PLATE	1L06
592564	STOP LIGHT MOUNTING PLATE	2L13
592567	SPRING	1L06
592567	SPRING FOR MOUNTING PLATE	2L13
592592	CROSSMEMBER NO 4 109 4 CYL	2G02
592594	CROSSMEMBER NO 4 109 6 CYL	2G02
592774	PROTECTION PAD	2G02
592778	FLEXIBLE MOUNTING	2C03
592778	MOUNTING-RUBBER-EXHAUST PIPE	2C04
592778	FLEXIBLE MOUNTING	2C05
592778	RUBBER-MOUNTING EXHAUST	2C06
592778	MOUNTING-RUBBER-EXHAUST	2C07
592778	MOUNTING-RUBBER-EXHAUST	2C08

PART NUMBER	DESCRIPTION	REF.NO.
592778	MOUNTING-RUBBER-EXHAUST	2C10
592778	FLEXIBLE MOUNTING	2C11
592903	CNTRL ROD FOR HAND-CONTROL	1O14
592904	LEVER ASSY FOR HAND-CONTROL	1O14
592956	PACKING PIECE STG COLUMN MTG	1K04
592984	STEERING COLUMN MOUNTING	1K04
592985	STG COLUMN MTG BRACKET LH	1K04
593619	BEARING-BALL	1I06
593619	BEARING-BALL	1I06
593664	BRACKET	1G05
593692	BOLT 0.375 UNF X 1.125 ¢LONG	1J08
593693	WASHER	1J08
593694	SHIM	1I11
593695	SHIM	1I11
593696	SHIM	1I11
593697	SHIM	1I11
593698	SHIM	1I11
593699	SHIM	1I11
593700	SHIM	1I11
593701	SHIM	1I11
593702	SHIM	1I11
593703	SHIM	1I11
593704	SHIM	1I11
593705	SHIM	1I11
593706	SHIM	1I11
593707	SHIM	1I11
593708	SHIM	1I11
593709	SHIM	1I11
593710	SHIM	1I11
593711	SHIM	1I11
593712	SHIM	1I11
593713	SHIM	1I11
593714	SHIM	1I11
593715	SHIM	1I11
593716	SHIM	1I11
593717	SHIM	1I11
593802	SPRING	1I10
593802	SPRING	1I12
593814	SHIM	1I06
593815	SHIM	1I06
593816	SHIM	1I06
593817	SHIM	1I06
593818	SHIM	1I06
593819	SHIM	1I06
593820	SHIM	1I06

PART NUMBER	DESCRIPTION	REF.NO.
593821	SHIM	1I06
593981	SELECTOR-GEAR CHANGE	1I12
593983	BUSH-GEAR LEVER EXTENSION	1I12
593991	SELECTOR	1I12
594018	WASHER-THRUST	1H04
594018	SHIM	1I06
594019	WASHER-THRUST	1H04
594019	SHIM	1I06
594020	WASHER-THRUST	1H04
594020	SHIM	1I06
594021	WASHER-THRUST	1H04
594021	SHIM	1I06
594022	SHIM	1I06
594023	SHIM	1I06
594024	SHIM	1I06
594026	SEAL-TRANSMISSION BRAKE	1L05
594029	SEAL-OIL	1I11
594087	SEAL-BELL HOUSING COVER	1I03
594089	SHAFT-SELECTOR	1I12
594091	DUST CAP FOR BLEED SCREW	1G05
594104	NUT	1J06
594134	BOLT-SPECIAL	1J03
594150	PLATE	1H11
594195	INTERMEDIATE GEAR SHAFT	1H07
594244	GEAR-REVERSE IDLER	1I09
594290	BEARING ROLLER	1I09
594291	BEARING-ROLLER	1I06
594292	BEARING-ROLLER	1I06
594312	FRONT AXLE ASSEMBLY LESS	1J03
594320	COVER-SIDE-GEARBOX	1I04
594322	HALFSHAFT COMPLETE RH	1J05
594323	HALFSHAFT COMPLETE LH	1J05
594338	SHAFT-REAR OUTPUT	1I11
594340	DIFFERENTIAL COMPLETE-GEARBOX	1I10
594349	REAR AXLE ASSEMBLY LESS	1J12
594361	FRONT PROPELLER SHAFT 6 CYL	1J03
594389	BEARING-ROLLER-REVERSE GEAR	1I09
594486	DIFFERENTIAL CASE	1J08
594487	DIFFERENTIAL CASE	1J08
594493	CROWN WHEEL AND PINION	1J08
594505	OUTER COLUMN	1K02
594506	INNER COLUMN RH STG	1K02
594507	INNER COLUMN LH STG	1K02
594594	"TYRAP"STRAP	2K14
594594	"TYRAP"STRAP	2L15

PART NUMBER	DESCRIPTION	REF.NO.
594619	PIPE-REAR BRAKE	1L09
594664	CHASSIS FRAME 4 CYL 1 TON	2G02
594742	BRACKET FOR SHUTTLE VALVE	2L12
594747	BRAKE PIPE,VALVE TO RR HOSE	2L12
594748	BRAKE PIPE,VALVE TO RR HOSE	2L12
594752	PIPE,VALVE TO LHF	2L12
594753	HOSE CLIP	1N02
594753	CLIP-AIR CLEANER PIPE	1N03
594753	HOSE CLIP-FUEL FILLER	1N14
594753	HOSE CLIP	1N15
594753	HOSE CLIP-FUEL FILLER	1N16
594753	HOSE CLIP-FUEL FILLER PIPE	1N17
594774	HEAT SHIELD MTG BRKT TOP	2C09
594776	BLEED PIPE	1G05
594822	ADAPTOR	1G05
594938	FIXING PLATE FOR 3 WAY PIPE	1L09
594943	FUEL PIPE TANK TO PUMP	1N12
595119	MOUNTING BRACKET	1I05
595119	BRACKET-GEARBOX MOUNTING	1I05
595123	STEERING DROP ARM	1K02
595336	WHEEL NUT WRENCH 1.0625 AF	2L11
595339	PIPE-FUEL	1N08
595339	FUEL PIPE PUMP TO FILTER	1N12
595340	FUEL PIPE	1N08
595340	PIPE-FUEL	1N12
595396	REMOTE BREATHER PIPE	1J02
595396	REMOTE BREATHER PIPE	1J03
595469	DRAG LINK DAMPER BRACKET	1K07
595473	REMOTE BREATHER PIPE	1J12
595478	BOLT-BANJO	1I05
596000	INLET MANIFOLD	1C13
596000	INLET MANIFOLD ASSEMBLY	2L12
596069	PLUG	1C13
596097	STUD	1D13
596097	STUD	1E02
596097	STUD FOR CYLINDER HEAD	1E11
596225	THERMOSTAT	1C10
596225	THERMOSTAT	1E10
596384	DIAPHRAGM UNIT	1C14
596384	DIAPHRAGM	2L12
596385	TRIGGER VALVE	2L12
596387	BANJO RING ASSEMBLY	2L15
596438	PIPE VALVE TO INLET PIPE	2L12
596445	ADAPTOR ASSEMBLY	2L12
596490	LOCKING PLATE EXH MANIFOLD	1C13

PART NUMBER	DESCRIPTION	REF.NO.
596493	CLIP-COLD START	1M06
596495	ELBOW	1N02
596691	CARBURETTER ELBOW	2L12
596717	ADAPTOR	1N06
596955	INLET MANIFOLD	1C13
597563	BANJO BOLT	1C11
597563	BOLT-BANJO	1E11
597586	CUP PLUG FOR CYLINDER BLOCK	1C02
597586	CUP PLUG	1E02
597722	ADAPTOR ASSY OIL FILTER	1D13
598006	BLANKING PLATE CYLINDER HEAD	1C11
598006	PLATE-CYLINDER HEAD	1D11
598046	CUP PLUG	1D11
598056	ENGINE STOP LEVER	1N10
598064	HUB FOR FAN	1C10
598064	HUB-FAN PULLEY	1E09
598104	EXHAUST MANIFOLD	1E13
598110	CARBURETTER COMPLETE	1M05
598127	CLIP REAR	2L12
598128	CLIP FRONT	2L12
598197	STUD	1C13
598197	STUD	2L12
598214	OIL PUMP SHAFT	1D05
598231	OIL FILLER CAP	1C08
598231	CAP-ENGINE OIL FILLER	1D08
598231	CAP-OIL FILLER	1E09
598318	PIPE MANIFOLD TO TRIGGER VALVE	2L15
598354	HOUSING-OIL FILTER	1E12
598380	PIPE	1C14
598380	PIPE TRIGGER VALVE TO DIAPHRAGM	2L15
598473	EXHAUST MANIFOLD	1C13
598473	EXHAUST-MANIFOLD	2L12
598483	WATER PUMP	1D10
598483	WATER PUMP AND VISCOUS DRIVE	2L17
598486	HUB VISCOUS DRIVE ASSY	1D10
598486	HUB VISCOUS DRIVE ASSEMBLY	1D11
598486	SPINDLE-WATER PUMP	1E10
598491	PULLEY-WATER PUMP	1E10
598516	SEALING PAD FOR CATCH TANK	2K14
598517	COVER FOR SEALING PAD	2K14
598531	OVERFLW BOTTLE SUPPORT-BRKT	2D02
598536	PLATE-BOTTOM-ROAD SPRING	1J16
598539	SILENCER AND TAIL PIPE	2C07
598540	EXHAUST SILENCER	2C06
598540	SILENCER AND TAIL PIPE	2C07

PART NUMBER	DESCRIPTION	REF.NO.
598575	MOUNTING BRACKET-FUEL PUMP	1N08
598652	BELL CRANK LEVER	1010
598654	LOST MOTION LEVER	1010
598792	PLATE-EXHAUST MOUNTING	2G02
598823	BRACKET-ACCELERATOR SHAFT CONTROL	1012
598844	ACCELERATOR CONNECTING LEVER	1N10
598848	SPRING ANCHOR-ACCELERATOR CONTROL	1012
598850	ACCELERATOR LEVER	1011
598851	BRACKET-ACCELERATOR CABLE	1012
598852	ACCELERATOR CABLE ASSEMBLY	1012
598853	PLAIN WASHER	1C14
598853	PACKING PIECE	1D15
598854	CHECK STRAP	2G02
598877	FRONT EXHAUST PIPE	2L13
598879	EXHAUST BLEED PIPE	2L13
598880	NUT	2L13
598882	CLIP	2L13
598899	OLIVE	2L13
599061	TRACK ROD TUBE	1K06
599063	TRACK ROD ADJUSTER TUBE	1K06
599102	PIPE,VALVE TO LHF	2L12
599224	FUEL PIPE	2L15
599225	FUEL PIPE	2L15
599233	FUEL TANK	1003
599233	FUEL TANK	1004
599234	FUEL TANK	1003
599234	FUEL TANK	1006
599312	CHOKE PULL CONTROL ASSEMBLY	1014
599313	CHOKE PULL CONTROL ASSEMBLY	1014
599314	CHOKE PULL CONTROL ASSEMBLY	1014
599336	CHOKE PULL CONTROL ASSEMBLY	1014
599337	CHKE PULL CNTRL ASSY 2 6 PET-¢RHD	1014
599338	CHKE PULL CNTRL ASSY 2.250 PET-¢LHD	1014
599339	ENGINE STOP CNTRL DIESEL RHD	1014
599340	ENGINE STOP CNTRL DIESEL LHD	1014
599343	PIPE,VALVE TO RHF	2L12
599378	SILENCER AND TAILPIPE 109 4 CYL S/W	2C08
599396	SUPPORT BRACKET	2F09
599443	VALVE-PRESSURE DIFFERENTIAL	1L12
599443	SHUTTLE VALVE	2L12
599447	FUEL PIPE COMPL TANK TO PUMP	1N11
599447	PIPE-FUEL	1N13
599447	PIPE-FUEL	1N13
599448	FUEL PIPE TANK TO PUMP	1N12
599552	BOLT-SPECIAL	1I04

PART NUMBER	DESCRIPTION	REF.NO.
599575	JOINT WASHER	1I05
599698	DISTANCE PIECE FOR SWIVEL PIN	1J06
599698	SPACER-STUB AXLE	1J12
599698	SPACER STUB SHAFT	1J13
599826	STUB AXLE ASSEMBLY 88	1J06
599827	STUB AXLE ASSEMBLY 109	1J06
599828	SLEEVE-HUB BEARING	1J13
599828	REAR HUB SLEEVE	1J12
599869	ROLLER BEARING	1H07
599945	DIFFERENTIAL CROSS SHAFT	1J08
599995	HOUSING-SPEEDOMETER DRIVE	1I11
600174	THRUST WASHER	1D04
600175	THRUST WASHER	1D04
600176	THRUST WASHER	1D04
600177	THRUST WASHER	1D04
600178	THRUST WASHER	1D04
600179	THRUST WASHER	1D04
600200	WHL CYLINDER ASSY LH FRONT	1L03
600201	WHL CYLINDER ASSY RH FRONT	1L03
600202	ANCHOR PLATE	1L03
600203	ANCHOR PLATE	1L03
600210	OVERHAUL KIT-FRONT	2L07
600210	WHEEL CYLINDER KIT	1L03
600212	SPRING	1L03
600226	ADAPTOR & LEADS	2F02
600243	FLYWHEEL ASSEMBLY	1G02
600245	STUD KIT-CYLINDER BLOCK	1C02
600245	STUD-KIT-CYLINDER BLOCK	1E02
600303	'LOCTITE'RETAINING COMPOUND-	2L07
600310	2ND LEAF	1J18
600311	DOWEL FOR SPRING	1J18
600329	TERMINAL BUSH & LEAD	2E02
600329	TERMINAL AND LEAD-DISTRIBUTOR	2E04
600401	OIL CONTAINER-AIR CLEANER	1N02
600423	SCREW AND WASHER	2F03
600423	SPECIAL SCREW AND WASHER	2F04
600476	SPRINGS SET	2E02
600538	CROWN WHEEL & PINION	1J08
600603	GEARBOX GASKET KIT	1H02
600603	GEARBOX GASKET KIT	2L07
600613	FILTER-AIR CLEANER	1N02
600613	ELEMENT FOR AIR CLEANER	1N02
600613	FILTER-AIR CLEANER	1N03
600656	FLANGE	1J02
600656	FLANGE-PROPELLOR SHAFT	1J03

PART NUMBER	DESCRIPTION	REF.NO.
600656	FLANGE-PROPELLER SHAFT	1J14
601314	BARSEAL SEALING PELLET	2L07
601543	GROMMET	2F03
601717	GASKET	2F03
601721	LENS	2F04
601754	SPRING SET	2E07
601754	SPRING SEAT-STARTER MOTOR BRUSHES	2E08
601790	SPLINED STUB SHAFT	1J02
601790	SPLINE-PROPELLOR SHAFT	1J03
601790	SPLINE-PROPELLER SHAFT	1J14
601835	THROTTLE SPINDLE	1M02
601836	THROTTLE LEVER	1M02
601837	THROTTLE STOP	1M02
601838	NUT-SPECIAL	1M06
601838	SPECIAL NUT	1M02
601840	RELAY LEVER	1M02
601841	SPLIT PIN	1M02
601842	LEVER	1M02
601843	PLAIN WASHER	1M02
601844	BUTTERFLY FOR THROTTLE	1M02
601845	SCREW-CARBURETTER THROTTLE	1M07
601845	SPECIAL SCREW	1M10
601845	SCREW FIXING THROTTLE VALVE	2L17
601845	SPECIAL SCREW	1M02
601846	SPECIAL SCREW	1M02
601850	'O' RING	1M03
601852	BALL FOR PISTON	1M03
601853	CIRCLIP	1M03
601854	PLUG FOR PUMP JET	1M03
601856	ACCELERATOR PUMP	1M03
601857	SPECIAL WASHER	1M03
601858	FLOAT	1M03
601859	SPINDLE FOR FLOAT	1M03
601860	TOP COVER	1M02
601861	LEVER & SWIVEL	1M03
601862	SPRING	1M03
601863	CIRCLIP	1M03
601864	BOLT FOR CHOKE SPINDLE LEVER BRACKET	1M03
601865	CHOKE SPINDLE	1M03
601866	SPRING	1M03
601867	BUTTERFLY FOR CHOKE	1M02
601869	PLAIN WASHER	1M03
601872	SPECIAL SCREW	1M03
601873	SHAKEPROOF WASHER	1M03
601874	SPINDLE & LEVER	1M03

PART NUMBER	DESCRIPTION	REF.NO.
601875	SPACING WASHER	1M03
601876	PUMP LEVER	1M02
601877	WASHER-STARLOCK	1M06
601877	WASHER	1M02
601878	RETAINING RING	1M02
601879	DIAPHRAGM	1M02
601880	GASKET	1M02
601881	SPRING	1M02
601882	COVER	1M02
601883	SCREW	1M02
601884	SPRING WASHER	1M02
601886	SPECIAL SCREW	1M03
601887	SPRING WASHER	1M03
601888	SCREW & WASHER	1M02
601889	SCREW AND WASHER FOR CARB TOP COVER	1M02
601891	SPLIT PIN	1M03
601892	PLAIN WASHER	1M03
601893	LINK	1M02
601894	SPLIT PIN	1M02
601895	MAIN JET	1M03
601897	SLOW RUNNING JET	1M03
601899	PUMP JET	1M03
601900	NEEDLE VALVE FOR CARBURETTER	1M03
602040	DOWEL	1F09
602061	NUT-CONNECTING ROD	1F04
602067	SPRING-OIL RELEASE	1F05
602070	STRAINER-ENGINE OIL	1F03
602071	PLUG-OIL PUMP	1F05
602076	RETAINER-INLET MANIFOLD GASKET SEAL	1F07
602082	CONNECTING ROD	1F04
602087	GASKET-ENGINE SUMP	1F03
602097	BOLT-SPECIAL	1F05
602098	WASHER-PLAIN	1F09
602098	WASHER-PLAIN	1F09
602099	SEAL-INLET MAINFOLD GASKET	1F07
602123	PLUG-CYLINDER HEAD	1F09
602130	BOLT-SPECIAL	1F02
602141	DOWEL	1F02
602142	SPRING-VALVE ROCKER	1F05
602146	CUP PLUG	1F02
602147	CUP PLUG	1F02
602148	WASHER-CONCAVE	1F05
602152	CUP PLUG	1F02
602152	CUP PLUG	1F02
602152	CUP-PLUG	1F06

PART NUMBER	DESCRIPTION	REF.NO.
602153	ROCKER-VALVE R.H.	1F05
602154	ROCKER-VALVE L.H.	1F05
602172	BAFFLE-VALVE GEAR	1F05
602186	WASHER-PLAIN	1F05
602191	BOLT-SPECIAL	1F09
602192	BOLT SPECIAL	1F09
602193	BOLT-SPECIAL	1F09
602199	SCREW-SPECIAL	1F03
602201	DOWEL	1F04
602212	PLUG	1F02
602212	SCREWED PLUG FOR OIL FILTER ADAPTOR	1D13
602227	BOLT	1F06
602236	BOLT	1F07
602289	CUP PLUG FOR CYLINDER HEAD	1E11
602289	CUP-PLUG	1F09
602388	BOLT	1F04
602411	SPACING WASHER	1F03
602505	PULLEY-ALTERNATOR	2E16
602512	GASKET-ROCKER COVER	1F10
602530	SCREW-SPECIAL	1F10
602539	CLIP	1D14
602539	CLIP-HOSE TO ROCKER COVER	2L17
602582	FAN PULLEY	1F11
602587	RETAINER-CRANKSHAFT PULLEY	1F03
602609	BOLT-CONNECTING ROD	1F04
602634	'O' RING	1M11
602910	BOLT SPECIAL 0.8750" LONG	1F05
602912	BOLT SPECIAL 1.25" LONG	1F05
602913	BOLT SPECIAL 1.5625" LONG	1F05
602915	DRAIN TAP	1C02
602915	TAP-WATER DRAIN	1D03
602915	TAP-WATER DRAIN	1E02
603031	BRACKET ENGINE LIFTING	1F09
603069	SEAL	1N05
603127	SCREW-SPECIAL	1F10
603143	PIPE-WATER	1F02
603184	CLIP-PIPE	1F10
603224	PLUG-INLET MANIFOLD	1F06
603237	ROLLER	1M12
603277	BANJO	1F06
603301	RIM BALANCING-CRANKSHAFT	1F03
603330	FLAME TRAP	1D09
603330	FLAME TRAP	1M13
603330	TRAP-FLAME-EVAPORATIVE	2L12
603330	FLAME-TRAP	2L16

PART NUMBER	DESCRIPTION	REF.NO.
603376	CLIP	1M13
603378	PUSH ROD-VALVE	1F05
603428	DOWEL	1F11
603431	UNION NUT FOR FUEL PIPE	1N11
603431	NUT-FUEL PIPE	1N12
603431	NUT-FUEL PIPE	1N13
603431	NUT-FUEL PIPE	1N13
603441	GASKET-WATER OUTLET PIPE	1F06
603446	SEALING WASHER-DISTRIBUTOR	2E06
603521	JOINT WASHER	1F05
603535	ROLL PIN	1F03
603554	GUIDE VALVE	1F09
603561	BRACKET	1F06
603561	ANCHOR BRACKET	1M12
603622	SPRING	1M12
603659	PLUG-ENGINE OIL DRAIN	1F03
603672	CLIP-PLUG LEADS	1F10
603673	CLIP-DISTRIBUTOR LEADS	2E06
603675	CLIP-PLUG LEADS	1F10
603734	PEDESTAL-VALVE ROCKER SHAFT	1F05
603775	GASKET-FRONT COVER	1F04
603796	GASKET-CYLINDER HEAD	1F09
603851	GROMMET	1N04
603851	GROMMET	1N06
603887	CLIP FIXING HOSE	1N14
603887	CLIP FIXING HOSE	1N15
603887	CLIP FIXING HOSE	1N16
603887	HOSE CLIP-FUEL TANK BALANCE PIPE	1O02
603887	CLIP-FUEL TANK BREATHER HOSE	1O04
603887	CLIP-HOSE	2L16
603920	ADAPTOR-AIR BLEED	1F06
605011	SEAL	1N10
605012	DRAIN PLUG	1N10
605013	SEAL	1N10
605092	OUVERHAUL KIT	1M02
605092	CARBURETTER OVERHAUL KIT	2L07
605093	CARBURETTER OVERHAUL KIT	2L07
605093	GASKET KIT	1M02
605106	GASKET KIT	1D03
605106	ENGINE OVERHAUL GASKET KIT	2L07
605157	CYLINDER BLOCK ASSEMBLY	1D03
605169	GASKET SMALL	1D13
605190	CAP-DRISTRIBUTOR	2E06
605191	ELEMENT	1N05
605238	PLASTIGAUGE STRIP-BOX OF 24	2L07

PART NUMBER	DESCRIPTION	REF.NO.
605322	SPRING WASHER	1N07
605508	END PLATE FOR STEERING BOX	1K02
605544	DISTRIBUTOR CAP	2E04
605544	CAP-DRISTRIBUTOR	2E05
605544	DISTRIBUTOR CAP	2L17
605622	SUNDRY PARTS	2E09
605683	MAIN JET	1M03
605684	MAIN JET	1M03
605685	MAIN JET	1M03
605686	MAIN JET	1M03
605687	SLOW RUNNING JET	1M03
605705	NUT	2E09
605716	OVERHAUL KIT	1D09
605716	WATER PUMP OVERHAUL KIT	2L07
605765	COOLANT INHIBITOR	2L07
605793	ADAPTOR	1M05
605794	SPINDLE	1M06
605795	LEVER	1M06
605797	WASHER	1M06
605799	NUT	1M06
605800	BUTTERFLY-CARBURETTER	1M10
605800	BUTTERFLY	1M06
605801	SCREW	1M06
605803	COVER	1M06
605804	SPINDLE	1M06
605805	SPRING	1M06
605806	WASHER	1M06
605807	SCREW	1M06
605808	LEVER	1M06
605809	RETURN SPRING	1M06
605810	WASHER	1M06
605811	SCREW	1M06
605813	BRACKET	1M06
605815	SCREW	1M06
605816	SCREW	1M05
605817	SPRING	1M05
605820	PIN	1M05
605821	SPRING	1M05
605822	CLIP	1M05
605827	JET ORIFICE	1M06
605828	SPRING	1M06
605830	CARRIER	1M06
605833	FLOAT-CARBURETTER	1M07
605833	FLOAT-CARBURETTER	1M10
605833	FLOAT AND ARM	2L17

PART NUMBER	DESCRIPTION	REF.NO.
605833	FLOAT	1M06
605835	GASKET	1M05
605836	FLOAT CHAMBER	1M05
605837	SCREW	1M05
605838	SCREW	1M05
605842	RETAINING RING-CARBURETTER	1M05
605843	SCREW	1M05
605844	AIR VALVE	1M05
605845	SCREW	1M05
605846	TOP COVER	1M05
605847	SCREW	1M05
605848	DAMPER & CAP	1M05
605848	DAMPER-CARBURETTER	1M07
605848	DAMPER-CARBURETTER	1M10
605848	DAMPER AND OIL CAP	2L17
605857	GASKET KIT	1M05
605857	CARBURETTER GASKET KIT	2L07
605904	SPINDLE & GEAR	2F06
605925	SOLENOID	1M02
605997	LINING PACKAGE FOR CLUTCH	1G02
605997	LINING-CLUTCH	1G03
606098	CARBURETTER KIT	1M05
606098	CARBURETTER OVERHAUL KIT	2L07
606104	ELEMENT	1N04
606168	BREATHER FILTER	1M13
606168	BREATHER FILTER	1N04
606177	LIGHT UNIT	2F02
606178	BULB	2F02
606187	UNIVERSAL WING MIRROR HEAD	2G07
606207	SEAL FOR CENTRE BOLT	1N09
606211	LENS-NUMBER PLATE	2F04
606217	GASKET FOR STOP TAIL LAMP	2F03
606220	CIRCLIP	2E07
606220	RETAINER-BENDIX SPRING STARTER	2E08
606247	CLIP	1N04
606247	CLIP	1N05
606248	VALVE-DISPOSAL	1N04
606248	DUMP VALVE	1N05
606318	CARBURETTER JET FOR EMULSION BLOCK	1M03
606319	EMULSION BLOCK	1M03
606404	SEALING WASHER	1L07
606415	KIT-BRAKE MASTER CYLINDER	1L07
606415	OVERHAUL KIT	2L07
606474	BEARING-BALL	1I11
606487	NEEDLE	1M05

PART NUMBER	DESCRIPTION	REF.NO.
606501	BULB HOLDER	2F04
606661	SHAFT-ROCKER	1F05
606679	GASKET	1M02
606731	SPRING-CLUTCH CYLINDER	1G05
606733	SCREW-BLEED	1G05
606737	PLATE-ANCHOR-TRANSMISSION	1L05
606739	LEVER-TRANSMISSION BRAKE	1L05
606740	SHIM-SEALING-TRANSMISSION	1L05
606741	PIVOT-BRAKE SHOE	1L05
606742	ADJUSTER-TRANSMISSION BRAKE	1L05
606743	ADJUSTER-TRANSMISSION BRAKE	1L05
606744	PIVOT-BRAKE SHOE ADJUSTER	1L05
606745	WASHER-PLAIN-SPECIAL	1L05
606746	RETAINER-TRANSMISSION BRAKE	1L05
606747	SPRING-BRAKE SHOE RETAINING	1L05
606749	SPRING-BRAKE SHOE	1L05
606750	SPRING-TRANSMISSION BRAKE	1L05
606754	GASKET KIT-GEARBOX	1I25
606819	PIN FOR NEEDLE VALVE	1M06
606835	BOLT FOR ALTERNATOR	2E10
606835	BOLT	2E12
606835	BOLT-ALTERNATOR	2E14
606835	BOLT	2E16
606880	PRIMARY PINION	1H04
606880	GEARS-PRIMARY PINION AND CONSTANT	1H05
606881	GEAR BOX CASING	1H03
606895	BUSH	2E02
606988	EXHAUST MANIFOLD FIXING KIT	1C13
607162	GEAR CARRIER CASING	1J12
607163	BOLT	1J03
607163	BOLT	1J12
607164	CASE-DIFFERENTIAL	1J13
607164	DIFFERENTIAL CASE LESS GEARS	1J09
607165	BOLT FOR DIFFERENTIAL CROWN	1J09
607165	BOLT	1J13
607168	WASHER-CONCAVE-DIFFERENTIAL	1J13
607168	THRUST WASHER	1J09
607169	WASHER-DIFFERENTIAL WHEEL	1J13
607169	THRUST WASHER	1J09
607172	PLUG	1J12
607173	BOLT	1J12
607173	BOLT	1J03
607177	SHIM CROWN WHEEL PINION	1J13
607177	SHIM	1J09
607178	SHIM CROWN WHEEL PINION	1J13

PART NUMBER	DESCRIPTION	REF.NO.
607178	SHIM FOR PINION BEARING	1J09
607179	SHIM CROWN WHEEL PINION	1J13
607179	SHIM	1J09
607180	BEARING-PINION	1J13
607180	PINION BEARING	1J03
607180	PINION BEARING	1J09
607181	BEARING-BALL	1J12
607181	PINION BEARING	1J03
607182	OIL THROWER	1J12
607182	OIL THROWER	1J03
607183	GASKET	1J12
607183	GASKET	1J03
607185	FLANGE	1J03
607185	FLANGE-REAR AXLE	1J12
607186	BRACKET	1J12
607187	BEARING-BALL	1J13
607187	BEARING	1J09
607188	SHIM-DIFFERENTIAL	1J13
607188	SHIM	1J09
607189	SHIM-DIFFERENTIAL	1J13
607189	SHIM	1J09
607190	SHIM-DIFFERENTIAL	1J13
607190	SHIM	1J09
607191	SHIM-DIFFERENTIAL	1J13
607191	SHIM	1J09
607197	SPACER-CROWN WHEEL PINION	1J13
607197	SPACER	1J09
607247	REAR AXLE ASSY LESS HUB	1J12
607252	RIVETS FOR BRAKE SHOE	1L05
607357	WASHER-PLAIN	1J12
607357	WASHER FOR PINION	1J03
607605	WASHER FOR NEEDLE VALVE	1M06
607677	NUT FOR VOLUME CONTROL SCREW	1M02
607678	PUMP DISCHARGE VALVE	1M03
607753	BOLT KIT FOR STARTER	2E09
607754	ARMATURE FOR STARTER MOTOR	2E09
607808	STEADY POST AND BUSH	1L03
607814	THROTTLE STOP AND FAST IDLE LEVER	1M06
607815	BUSH FOR JET ORIFICE	1M06
607932	PIN RETAINING KIT FOR STRTR MOTOR	2E07
607932	KIT-PINION RETAINING STARTER	2E08
607965	STEERING BOX ASSEMBLY RH STG	1K02
607966	STEERING BOX ASSEMBLY LH STG	1K02
607968	BUSH FOR RCKER SHFT-STG BOX	1K02
607971	TUBE HOUSING STEERING COLUMN	1K02

PART NUMBER	DESCRIPTION	REF.NO.
607972	BOLT SPECIAL FOR STEERING	1K02
607992	BOLT SPECIAL FOR STEERING	1K02
607993	SPECIAL BOLT 0.3125UNC X 0.875	1K02
608004	SCREW AND WASHER	2F03
608004	SCREW AND WASHER FOR FLASHER LAMP	2F04
608005	SCREW AND WASHER FOR SIDE LAMP	2F03
608023	STUB SHAFT FOR SWIVEL PIN	1J05
608074	SUPPRESSOR FOR ALTERNATOR	2E10
608074	SUPPRESSOR FOR ALTERNATOR	2E12
608074	SUPPRESSOR-ALTERNATOR	2E14
608074	SUPPRESSOR-ALTERNATOR	2E16
608094	BRUSH/SPRING DISTRIBUTOR CAP	2E06
608111	VACUUM UNIT FOR DISTRIBUTOR	2E02
608118	BRACKET-DRIVE END-ALTERNATOR	2E16
608119	REGULATOR-ALTERNATOR	2E16
608124	GASKET SET ENGINE OVERHAUL	1C02
608124	ENGINE OVERHAUL GASKET KIT	2L07
608142	BEVEL PINION AND SIDE GEAR	1I10
608142	BEVEL PINION AND SIDE GEARS	1I11
608143	SHAFT PINION-DIFFERENTIAL	1I10
608152	BUTTERFLY FOR THROTTLE	1M02
608158	CONTACT POINTS-DISTRIBUTOR	2E06
608172	BUSH KIT FOR STARTER MOTOR	2E07
608172	BUSHES-STARTER MOTOR	2E08
608174	STARTER MOTOR DRIVE END BRKT	2E07
608174	BRACKET-STARTER MOTOR END	2E08
608194	VACUUM UNIT-DISTRIBUTOR	2E06
608197	LEAD-LOW TENSION-DISTRIBUTOR	2E06
608246	PLUG	1H03
608246	PLUG-BOTTOM COVER	1H09
608246	PLUG-FILLER	1J02
608246	PLUG,FILLER	1J03
608246	PLUG-OIL LEVEL	1J07
608246	PLUG-REAR AXLE	1J12
608246	PLUG,DRAIN	1J12
608246	OIL FILLER PLUG	1J03
608283	INNER AND OUTER MEMBERS	1H04
608296	DRIVING LAMP	2F02
608304	BUSH KIT FOR STARTER MOTOR	2E09
608327	CYLINDER BLOCK 2.25 PETROL	1C02
608327	CYLINDER BLOCK	1E02
608352	BUSH KIT	2E09
608417	COVER PLATE-GEARBOX	1I04
608464	BALL JOINT ASSY RH THREAD	1K06
608464	BALL JOINT-STEERING LINKS	1K07

PART NUMBER	DESCRIPTION	REF.NO.
608465	STEERING TRACK ROD ASSY	1K06
610025	BRACKET	1M13
610178	DOG-STARTING	1F03
610289	CHAINWHEEL-CRANKSHAFT	1F06
610327	JOINT WASHER	1M11
610333	THROTTLE LEVER	1M12
610402	CLIP-PLUG LEADS	1F10
610489	CLIP-OIL DIPSTICK TUBE	1F02
610529	DOWEL	1D10
610529	DOWEL FOR VISCOUS DRIVE HUB	1D11
610529	DOWEL-WATER PUMP SANDLE	1E10
610529	DOWEL	1F11
610578	HUB ASSEMBLY	1F11
611015	OLIVE	1M09
611019	PULLEY-CRANKSHAFT	1F03
611022	BRACKET-ALTERNATOR	2E16
611089	SEAL-REAR MAIN BEARING CAP	1F02
611109	HOSE	1M13
611110	HOSE	1M13
611110	CONNECTION-RUBBER-PIPE TO	2L15
611110	RUBBER CONNECTION PIPE TO CATCH TANK	2K14
611113	HOSE	1M13
611114	HOSE	1M13
611185	LOCATING PLATE FOR VACUUM SWITCH	2L15
611323	RING GEAR-FLYWHEEL	1G03
611324	FLYWHEEL ASSEMBLY	1G03
611351	BRACKET	1M13
611409	SEAL-OIL-REAR MAIN BEARING	1F02
611514	UNION-OIL PUMP	1F05
611786	GASKET-WATER OUTLET PIPE	1F07
612093	RIVET	2G08
612320	ADJUSTING LEVER	1M12
612326	GASKET-WATER PUMP	1F10
612326	GASKET-WATER PUMP	1F11
612505	PETROL FEED PIPE	1M09
612689	LOCK WASHER	1F08
612710	HOUSING-ENGINE OIL STRAINER	1F03
612871	BRACKET	1F04
612898	CUP PLUG	1F02
612980	SUMP-ENGINE OIL	1F03
612989	CRANKSHAFT	1F03
613087	FAN BLADE	1F11
613187	CLIP	1D14
613187	CLIP-HOSE TO AIR PUMP	2L17
613244	COWL-ALTERNATOR	2E16

PART NUMBER	DESCRIPTION	REF.NO.
613514	CHOKE PIPE	1M09
613519	AIR INTAKE HOSE	1N06
613538	VACUUM PIPE	2L15
613602	FAN BELT	1F11
613602	BELT-FAN	1F12
613620	BRACKET-ALTERNATOR	2E16
613669	DAMPER-VIBRATION	1F03
613671	DEFLECTOR-CRANKSHAFT	1F03
613805	CLIP	1M13
613805	CLIP	1N04
613857	RETAINER-DISTRIBUTOR	2E06
614037	GEAR-OIL PUMP	1F05
614088	DOWEL-INLET	1F09
614089	VALVE-EXHAUST	1F09
614188	GEAR-DISTRIBUTOR DRIVE	1F06
614202	FILTER-OIL PUMP	1F05
614361	VACUUM SWITCH	2L15
614443	BOLT-SPECIAL	1F08
614555	OLIVE	1M09
614585	CLAMP-DIPSTICK PIPE	1F02
614737	PULLEY-FAN	1F12
614739	FAN ASSY	1D10
614739	FAN ASSEMBLY	1D11
614739	FAN BLADE	1E10
614739	FAN BLADE	1F12
614739	FAN ASSEMBLY	2L17
614866	CONNECTOR	1N05
614890	CLIP	1N06
614891	PLASTIC PIPE	1M09
614891	TUBE	1M09
614891	PIPE	1N05
614908	SPINDLE-FAN PULLEY	1F11
614920	HOT AIR HOSE	1N06
614938	LINK-ADJUSTER-ALTERNATOR	2E16
614939	LINK ADJUSTER-ALTERNATOR	2E16
622042	OIL SEAL FOR SPEEDO DRIVE	1H08
622045	GASKET-GEAR BOX BELL HOUSING	1H02
622046	JOINT WSHR-TRANSFER BOX TO GEARBOX	1H09
622047	JOINT WASHER FOR BEARING HOUSING	1H09
622048	JOINT WASHER-OUTPUT SHAFT	1H10
622141	VALVE-VACUUM CONTROL	1I13
622155	SELECTOR FORK	1H12
622281	BOLT 0.25 BSF X 0.40625 ¢LONG	1H11
622324	CLIP-PIPE	1I05
622388	PAD-SELECTOR-LEVER	1I12

PART NUMBER	DESCRIPTION	REF.NO.
622538	BEARING	1I06
623036	PANEL AND INTERIOR SWITCH	2F09
623037	PANEL LIGHT SWITCH	2F09
623055	SPEEDOMETER CABLE LH STG	2F08
623087	CABLE ENGINE HARNESS	2F10
623088	CABLE ENGINE HARNESS	2F11
623089	CABLE ENGINE HARNESS	2F10
623097	FUEL GAUGE UNIT	1003
623097	GAUGE-FUEL TANK	1004
623097	GAUGE-FUEL TANK	1006
623098	FUEL GAUGE UNIT	1003
623100	EARTH LEAD	2F10
623100	LEAD-EARTH	2F11
623192	TEE PIECE	2F15
623210	BATTERY TERMINAL LEAD	2F12
623213	HEAVY CABLE BATTERY-STARTER SOLENOID	2F12
624021	CLIP FOR AIR CLEANER	1N03
624027	'U' BOLT	1J15
624028	'U' BOLT	1J15
624034	'U' BOLT	1J15
624055	SUPPORT BRACKET	2F09
624077	BOTTOM PLATE LH	1J15
624078	BOTTOM PLATE RH	1J15
624079	BOTTOM PLATE LH	1J15
624080	BOTTOM PLATE RH	1J15
624084	BOTTOM PLATE RH	1J17
624170	FLEXIBLE MOUNTING PLATE	2C03
624196	FRONT EXHAUST PIPE DIESEL	2C03
624251	WASHER-HANDBRAKE RELEASE	1L14
624252	HANDBRAKE LEVER ASSY RHD	1L14
624262	HANDBRAKE LEVER ASSY LHD	1L14
624341	TAIL PIPE COMPLETE	2C10
624363	HOSE FOR RADIATOR TOP	2D02
624364	HOSE FOR RADIATOR TOP	2D02
624430	BATTERY TRAY	2G04
624434	SEAL-OIL	1K05
624452	DRAIN TUBE	2G04
625038	CAP ENGINE OIL FILLER	1C12
625038	CAP-ENGINE OIL FILLER	1F10
625580	SPECIAL WASHER	2F03
850641	PLAIN WASHER	1C14
850641	WASHER-PLAIN	1D15
850641	WASHER-PLAIN	1E13
851041	PLAIN WASHER	2G05
851041	PLAIN WASHER	2G06

PART NUMBER	DESCRIPTION	REF.NO.
889861	BOLT	2E13
10802070	WASHER JOINT	1E11
90212104	STUD FOR BOTTOM COVER	1H09
90213636	SHAFT FOR SELECTOR FORK	1H11
90214684	SPRING RING FIXING COVER	1K06
90214684	SPRING-STEERING BALL JOINT	1K07
90214684	SPRING RING	1K08
90215593	BOLT 0.25 WHIT X 0.65625 LONG	1H02
90215593	BOLT	1H11
90215647	BOLT 0.3125WHIT X 0.6875¢LONG	1H11
90215758	SET BOLT-0.25WHIT X 0.50 LONG	1H09
90215758	BOLT	1H10
90215758	BOLT	1H11
90215769	BOLT	1H10
90215769	BOLT 0.25 WHIT X 0.4375 ¢LONG	1H11
90217355	NUT FOR REAR HUB	1J10
90217355	NUT FOR HUB	1J11
90217355	NUT-REAR HUB	1J13
90217398	THRUST SLEEVE	1J05
90217488	THRUST WASHER	1H07
90217512	ROLLER BEARING-SPEEDO DRIVE	1H08
90217521	BUSH FOR SELECTOR SHAFT	1H12
90217526	CIRCLIP	1H07
90217526	CIRCLIP	1I10
90217584	SELECTOR FORK	1H13
90217636	CLIP-RESERVOIR TANK	1L07
90217636	CLIP-RESERVOIR TANK	1L07
90217843	BUSH FOR MAINSHAFT BEARING	1H09
90217976	STUD-GEARBOX TRANSFER CASING	1H09
90217983	BEARING HOUSING-HANDBRAKE	1L14
90217983	RETAINER-HANDBRAKE CROSS	1L15
90217984	SPHERICAL BEARING-HANDBRAKE	1L14
90217984	BEARING HANDBRAKE	1L15
90218408	PIN FOR HANDBRAKE CROSS SHAFT	1L15
90218410	DISTANCE PIECE HANDBRAKE CROSS SHAFT	1L15
90306199	SUPPORT TUBE BEARING	2K06
90306200	SUPPORT TUBE	2K06
90306465	RUBBER BUFFER RADIATOR	2G05
90500610	SPRING FOR EXHAUST VALVE ROCKER	1D08
90502209	SPINDLE FOR OIL PUMP	1C04
90502209	SPINDLE-OIL PUMP	1D05
90502209	SPINDLE-OIL PUMP	1E04
90508035	CLIP FOR REAR BODY FIXING	2H02
90508035	CLIP	2H04
90508035	CLIP	2K03

PART NUMBER	DESCRIPTION	REF.NO.
90508035	CLIP	2K04
90508339	BRACKET	1D15
90508544	DISTANCE PIECE FUEL TANK MTGS	1002
90508544	DISTANCE PIECE-FUEL TANK MOUNTING	1003
90508544	DISTANCE PIECE-FUEL TANK MTG	1005
90508544	TUBE-DISTANCE-FUEL TANK MOUNTING	1006
90508545	MOUNTING RUBBER FUEL TANK	1002
90508545	MOUNTING-RUBBER-FUEL TANK	1003
90508545	MOUNTING RUBBER-FUEL TANK	1005
90508545	RUBBER-FUEL TANK MOUNTING	1006
90509730	CONNECTION FOR AIR CLEANER	1N03
90509970	GROMMET	1L06
90510730	SIDE COVER AND OIL FILLER PIPE	1C08
90510912	WASHER-SHAKEPROOF	2G18
90510912	FAN DISC WASHER	2H02
90510912	WASHER-SHAKEPROOF	2H04
90510912	WASHER-SHAKEPROOF	2H07
90510912	WASHER-STARLOCK	2H08
90511833	VALVE GUIDE	1D03
90511958	JOINT WASHER	1C10
90511958	GASKET-THERMOSTAT	1E10
90512142	COTTER HALVES-VALVE SPRINGS	2L12
90512142	VALVE COLLET	1D07
90512143	SLEEVE-LOCKING-VALVE SPRING	2L12
90512143	VALVE LOCKING SLEEVE EXHAUST	1D07
90512144	CAP-VALVE SPRING	2L12
90512144	VALVE SPRING CAP EXHAUST VALVES	1D07
90512205	INLET VALVE ROCKER ASSEMBLY	1C06
90512208	EXHAUST VALVE ROCKER ASSY	1C06
90512305	FAN DISC WASHER	1E11
90512413	CORE PLUG FOR CYLINDER HEAD	1E11
90512651	SHAKEPROOF WASHER	1G04
90512701	BOLT 0.375 UNF X 1.1875 LONG	1H08
90513171	DOUBLE ENDED UNION	1D11
90513171	ADAPTOR-BRAKE SERVO PIPE	1L07
90513454	WASHER FOR FLANGE	1J07
90513591	OIL FILTER	1D13
90513940	CLIP-BRAKE PIPE	1L07
90514721	CABLE CLIP	1M09
90515086	FLYWHEEL HOUSING ASSEMBLY	1G03
90515090	FAN BLADE ASSEMBLY	1E09
90515323	PISTON ASSEMBLY-TIMING CHAIN	1C04
90515855	BUSH FOR HIGH GEAR WHEEL	1H07
90516028	OIL SEAL FOR FRONT COVER	1D09
90517429	ROLLER FOLLOWER	1C06

PART NUMBER	DESCRIPTION	REF.NO.
90517429	BUSH-ROCKER SHAFT	1D08
90517429	ROLLER TAPPET	1E06
90517567	BRACKET-EXHAUST MOUNTING	2C07
90517567	BRACKET-EXHAUST MOUNTING TO PIPE	2C08
90517705	COVER-OIL PUMP	1I03
90517706	GASKET-OIL PUMP COVER	1I03
90517711	ELEMENT FOR FUEL FILTER	1N10
90518100	BOLT FOR CONNECTING ROD	1D04
90518362	BOLT	2L03
90518466	STUD CYLINDER HEAD TO BLOCK	1E11
90518719	TOP ROCKER COVER ASSEMBLY	1E12
90519054	CAMSHAFT BEARING FRONT	1C05
90519054	BEARING-CAMSHAFT	1E05
90519055	CAMSHAFT BEARING INTER/REAR	1C05
90519055	BEARING-CAMSHAFT	1E05
90519064	DOWEL LOWER	1C03
90519064	DOWEL	1D04
90519064	DOWEL	1E03
90519206	LOCATION STOP FOR JACK	1J05
90519602	CLIP	2F15
90519864	OIL PRESSURE SWITCH	1C12
90519864	SWITCH-OIL WARNING	1D11
90519864	SWITCH-OIL PRESSURE	1E12
90555649	LUCAR BLADE WIPER MOTOR EARTH	2F06
90560612	FUEL GAUGE UNIT	1004
90562714	ACCELERATOR PEDAL SHAFT	1009
90564216	EXTENSION PIECE OIL STRAINER	1D05
90564217	STUD-OIL STRAINER 0.25 UNF	1D05
90564334	OIL PUMP ASSEMBLY 2.6	1D05
90564812	PIN FIXING SERVO TO BRAKE PEDAL	1L06
90564812	PIN	2L13
90564832	GASKET BRAKE PEDAL BOX TO TOE BOX	1L06
90564832	GASKET-PLUG PEDAL-BRACKET	2L13
90566617	PIPE CONNECTION AT	1N10
90568054	JOINT WASHER	1F07
90568489	BANJO BOLT FIXING FUEL PIPE	1N10
90568525	STOP LEVER ASSEMBLY	1N10
90569017	CROSSMEMBER NO 4 1 TON	2G02
90569126	CYLINDER-BRAKE MASTER	1L07
90569128	CYLINDER-BRAKE MASTER	1L07
90569214	TAIL PIPE COMPLETE	2C10
90569611	BRAKE PEDAL ASSEMBLY	1L06
90569612	GASKET STOP LIGHT MOUNTING PLATE	1L06
90569612	GASKET-MOUNTING PLATE BRAKES	2L12
90571010	GEAR-MAIN SHAFT TRANSFER	1I06

PART NUMBER	DESCRIPTION	REF.NO.
90571030	PIN-SELECTOR SHAFT	1I12
90571086	GEAR-OIL PUMP	1I03
90571091	CIRCLIP	1I06
90571104	PLUG-GEARBOX OIL FILTER	1I04
90571451	SHIM	1I06
90574103	SET BOLT 0.4375UNF X 2.531	1D12
90574104	SET BOLT 0.4375UNF X 4.906	1D12
90574655	HOSE BREATHER TO MANIFOLD	1E12
90575015	NUT FOR SOLEN 010 TERMINAL POST	2F12
90575150	NUMBER PLATE LAMP	2F04
90575153	KNOB WIPER WASHER SWITCH	2F09
90575153	KNOB FOR SWITCH	2F15
90575183	LEAD STARTER MOTOR TO EARTH	2F12
90575478	CLAMP PLATE	2C11
90575511	CLAMP	2C11
90575585	BRACKET-GEARBOX MOUNTING	1I05
90575585	MOUNTING BRACKET	1I05
90575977	HOSE TO PENTHOUSE	2D04
90576510	BOLT 0.375 BSF X 1.25 LONG	1J05
90576624	BRAKE DRUM TRANSMISSION	1L05
90576626	BOLT	1I11
90576631	HOUSING-GEARBOX	1I05
90576632	BUSH-OUTPUT SHAFT	1I11
90576658	BOLT	1I12
90577082	CLIP OVERFLOW BOTTLE OUTLET	2D02
90577082	CLIP-HOSE	2L12
90577119	SHFT AND LEVER FOR HAND-CONTROL	1014
90577143	SUPPORT PLATE FOR NO. PLATE	2G02
90577144	FRONT SUPPORT PLATE-NUMBER PLATE	2G02
90577264	STG BOX STIFFENER BRACKET	1K04
90577434	BUSH-FRONT SPRING SHACKLE	1J15
90577434	BUSH-ROAD SPRING SHACKLE	1J16
90577449	TRUNNION-ACCELERATOR SHAFT CONTROL	1012
90577473	NUT-ROAD WHEEL	1J18
90577473	NUT	2H16
90577473	NUT	2I02
90577508	FUEL FILTER COMPLETE	1N09
90577508	FILTER ASSEMBLY-FUEL	2L15
90577611	PLUG-BRAKE SERVO	1L07
90577611	PLUG	2F13
90577611	PLUG	2L13
90577636	MASTER CYLINDER	1L07
90577636	TANK-BRAKE FLUID SUPPLY	1L07
90577716	SHACKLE PLATE INNER	1J16
90577718	SHACKLE PLATE OUTER	1J16

PART NUMBER	DESCRIPTION	REF.NO.
90577721	FRONT SPRING SHACKLE PLATE	1J15
90577723	SHACKLE PLATE OUTER PLAIN	1J15
90600400	OIL CONTAINER	1N02
90600400	CONTAINER-OIL-AIR CLEANER	1N03
90601848	VOLUME CONTROL SCREW	1M02
90601849	SPRING	1M02
90601890	PIN FOR CHOKE SPINDLE	1M03
90601898	VENTILATION SCREW	1M02
90602025	KEY-WOODRUFF	1F03
90602064	PLUGER-OIL PRESSURE	1F05
90602068	GASKET-ENGINE OIL STRAINER	1F03
90602072	GASKET-OIL PUMP	1F05
90602202	DOWEL	1F04
90602372	CHAINWHEEL-CRANKSHAFT	1F03
90605617	BRACKET FOR STARTER MOTOR	2E09
90605812	SHAKEPROOF WASHER	1M06
90606023	KIT-BRAKE MASTER CYLINDER	1L07
90606023	KIT,BRAKE MASTER CYLINDER	1L07
90606023	OVERHAUL KIT	2L07
90606261	GASKET FOR PETROL PUMP	1N08
90606261	GASKET	1N08
90606262	FILTER	1N08
90606262	FILTER FOR PETROL PUMP	1N08
90606664	SPACER	1J05
90607170	CROSS SHAFT-DIFFERENTIAL	1J13
90607170	CROSS SHAFT	1J09
90607193	BOLT FIXING DIFF CASE	1J13
90607607	CONTACT BREAKER BASE PLATE	2E02
90607607	PLATE-DRISTRIBUTOR-BASE	2E04
90607676	LOCKNUT FOR THROTTLE STOP SCREW	1M02
90607679	BRACKET FOR CHOKE SPINDLE LEVER	1M03
90607743	BRACKET-SLIP RING END-	2E16
90607816	WASHER FOR CARBURETTER JET ORIFICE	1M06
90607973	JOINT WASHER FOR STG COL	1K02
90608178	SUNDRY PARTS KIT FOR STARTER MOTOR	2E07
90608178	KIT-SUNDRY PARTS-STARTER MOTOR	2E08
90608178	KIT-SUNDRY PARTS-STARTER MOTOR	2E09
90608241	ROLLER-FUEL PUMP DIAPHRAGM	1N07
90608271	TEMPERATURE COMPENSATOR	1M10
90608297	PROTECTIVE COVER	2F02
90608330	WINDSCREEN WASHER VALVE	2F15
90608462	LONGTITUDINAL TUBE ASSY	1K06
90608462	LONGTITUDINAL TUBE-STEERING	1K07
90608545	LOCKNUT	1J12
90608545	LOCK NUT	1J03

PART NUMBER	DESCRIPTION	REF.NO.
90611014	NUT	1M09
90611112	HOSE	1M13
90611504	BOLT	1F07
90614584	BOLT-SPECIAL	1F09
90622182	BANJO SLAVE CYLINDER BLEED	1G05
90622240	SEAL-OIL	1I11
90623054	SPEEDOMETER CABLE RH STG	2F08
90624031	U BOLT	1J17
90624033	'U' BOLT FRONT SPRING	1J15
90624083	BOTTOM PLATE LH	1J17
90624131	FRONT EXHAUST PIPE DIESEL	2C03
90624214	DOUBLE LIFT JACK	2L11
90624431	BATTERY TRAY	2G04
90624433	RETAINER-OIL SEAL STG RELAY	1K05
90624436	JOINT WASHER-OIL SEAL	1K05
AAU 1053	LEVER-DISTRIBUTOR PUMP	1N10
AAU 1405	BRUSH KIT FOR STARTER MOTOR	2E07
AAU 1405	BRUSHES-STARTER MOTOR	2E08
AAU 1484	NEEDLE VALVE	1M06
AAU 1582	FLUID-CLEANING BRAKE PARTS	2L07
AAU 1700	SWITCH	1L11
AAU 1700	P.D.W.A.SWITCH	1L12
AAU 1700	SWITCH	1L13
AAU 1979	CLIP	1C09
AAU 1979	HOSE CLIP	2D04
AAU 1979	HOSE CLIP	2D04
AAU 1981	CLIP	1C08
AAU 1983	CLIP	1C09
AAU 1983	HOSE CLIP	2D02
AAU 2003	BALL JOINT-ACCELERATOR ROD	1O10
AAU 2003	BALL JOINT FOR CONTROL ROD	1O12
AAU 2053	ROTOR FOR ALTERNATOR	2E10
AAU 2053	ROTOR-ALTERNATOR	2E12
AAU 2053	ROTOR-ALTERNATOR	2E14
AAU 2367	RETAINER	2L04
AAU 2825	WASHER-SPRING	1J12
AAU 2825	SPRING WASHER	1J03
AAU 2967	OVERHAUL KIT	1M11
AAU 3381	OIL SEAL FOR DIFF PINION	1J03
AAU 3686	CABLE STRAP	1G04
AAU 3686	CABLE STRAP	2L09
AAU 3956	FAN FOR ALTERNATOR	2E10
AAU 3956	FAN-ALTERNATOR	2E12
AAU 3956	FAN-ALTERNATOR	2E14
AAU 4813	DRIVE ASSY FOR STARTER MOTOR	2E09

PART NUMBER		DESCRIPTION	REF.NO.
AAU 6248		LEAD-LOW TENSION-DISTRIBUTOR	2E06
AAU 6564		THROTTLE VALVE ASSEMBLY	1M07
AAU 6564		THROTTLE VALVE	2L17
AAU 6565		VACUUM UNIT	2L17
AAU 6565		VACUUM UNIT FOR DISTRIBUTOR	2E05
AAU 6714		HALFSHAFT RH	1J05
AAU 6715		HALFSHAFT LH	1J05
AAU 6774		COLLAR	2H09
AAU 6774		COLLER	2H11
AAU 6774		COLLAR	2H13
AAU 6838		BRAKE M/CYL SERVICE KIT 88	2L13
AAU 6919		AVDELOK BOLT	2H09
AAU 6920		RIVET	2H11
AAU 7090		THROTTLE VALVE	1M10
AAU 7219		EMISSION PACK	1M11
AAU 7803		PIPE CLIP	1L11
AAU 7803		CLIP FOR PIPES	1L12
AAU 7803		PIPE CLIP	1L13
AAU 7803		PIPE CLIP	2L12
AAU 7965		CAP	1L08
AAU 7965		FILLER CAP FOR MASTER CYL	2L13
AAU 7967		CABLE TIE-VENT PIPES	1M11
AAU 8182		RIVET	2H11
AAU 8469		BRAKE LINING WITH RIVETS	1L03
AAU 8470		BRAKE LINING WITH RIVETS	1L04
AAU 8471		BRAKE LINING WITH RIVETS	1L03
AAU 8600		SURGE PROTECTION DEVICE-	2E10
AAU 8600		SURGE PROTECTION DEVICE	2E12
AAU 8600		SURGE PROTECTION DEVICE-ALTERNATOR	2E14
AAU 8781		TAPERPROOF PARTS KIT	1M05
AAU 8782		TAMPERPROOF PARTS KIT	1M02
AAU 9902		SEAL-FUEL FILTER CONTAINER	1N10
AAU 9903		SEAL-FUEL FILTER CONTAINER	1N10
AAU 9942		BRAKE LINING SET	1L04
AAU 9942		BRAKE LINING WITH RIVETS	1L02
AB 604031	L	DRIVE SCREW	2G10
AB 604031	L	DRIVE SCREW	2H16
AB 606021	L	SCREW	1C07
AB 606021	L	DRIVE SCREW	1C11
AB 606021	L	DRIVE SCREW	1C12
AB 606021	L	DRIVE SCREW	1E08
AB 606021	L	DRIVE SCREW	1E12
AB 606021	L	SCREW FOR LIGHT UNIT	2F02
AB 606021	L	DRIVE SCREW	2J03
AB 606031	L	DRIVE SCREW	1O14

PART NUMBER		DESCRIPTION	REF.NO.
AB 606031	L	SCREW	2F13
AB 606031	L	DRIVE SCREW	2G14
AB 606031	L	DRIVE SCREW	2G16
AB 606031	L	DRIVE SCREW	2G17
AB 606031	L	SCREW	2H02
AB 606031	L	SCREW	2H13
AB 606031	L	DRIVE SCREW	2H18
AB 606031	L	SCREW	2J03
AB 606031	L	SCREW	2J04
AB 606031	L	SCREW	2K08
AB 606031	L	DRIVE SCREW	2L12
AB 606041	L	SCREW	1O14
AB 606041	L	DRIVE SCREW	2F03
AB 606041	L	DRIVE SCREW	2F04
AB 606041	L	SCREW	2F05
AB 606041	L	SCREW	2F06
AB 606041	L	DRIVE SCREW	2G11
AB 606041	L	DRIVE SCREW	2H03
AB 606041	L	DRIVE SCREW	2H06
AB 606041	L	DRIVE SCREW	2H17
AB 606041	L	DRIVE SCREW	2H18
AB 606041	L	SCREW	2J04
AB 606041	L	DRIVE SCREW	2J06
AB 606041	L	DRIVE SCREW	2J07
AB 606041	L	DRIVE SCREW	2J08
AB 606041	L	SCREW	2K02
AB 606041	L	DRIVE SCREW	2K03
AB 606041	L	DRIVE SCREW	2K04
AB 606051	L	SCREW	2F13
AB 606051	L	SCREW	2G05
AB 606051	L	DRIVE SCREW	2L12
AB 606061	L	DRIVE SCREW NO.6 X 0.75 ¢LONG	2G05
AB 606061	L	SCREW	2J02
AB 606071	L	SCREW	2G14
AB 606071	L	DRIVE SCREW	2G17
AB 606081	L	DRIVE SCREW NO 6 X 1" LONG	2K03
AB 606081	L	DRIVE SCREW	2K04
AB 608031	L	DRIVE SCREW	2H02
AB 608031	L	DRIVE SCREW	2H05
AB 608031	L	DRIVE SCREW	2H07
AB 608031	L	DRIVE SCREW	2I15
AB 608031	L	DRIVE SCREW	2J16
AB 608041	L	SELF TAPPING SCREW	1L09
AB 608041	L	DRIVE SCREW	2D04
AB 608041	L	DRIVE SCREW	2G07

PART NUMBER		DESCRIPTION	REF.NO.
AB 608041	L	DRIVE SCREW	2I02
AB 608041	L	DRIVE SCREW	2J05
AB 608051	L	DRIVE SCREW	2I03
AB 608061	L	SELF TAPPING SCREW	2I02
AB 608081	L	SCREW	2F05
AB 610031	L	SCREW	1M13
AB 610031	L	DRIVE SCREW	1N06
AB 610041	L	SCREW	1O14
AB 610041	L	SCREW	2H11
AB 610041	L	DRIVE SCREW	2J09
AB 610041	L	SCREW	2J11
AB 610041	L	DRIVE SCREW	2J13
AB 610051	L	DRIVE SCREW	1N13
AB 610051	L	DRIVE SCREW	1N13
AB 610051	L	DRVE SCRW NO 10 X 0.625"LONG	2D02
AB 610051	L	DRIVE SCREW	2F10
AB 610051	L	DRIVE SCREW	2F11
AB 610051	L	DRIVE SCREW	2G11
AB 610051	L	DRIVE SCREW	2G12
AB 610051	L	SCREW	2J08
AB 610051	L	DRIVE SCREW	2K03
AB 610051	L	DRIVE SCREW	2K04
AB 610051	L	DRIVE SCREW	2L17
AB 610061	L	SCREW	2J09
AB 610081	L	DRIVE SCREW	2J09
AB 610081	L	SCREW	2J13
AB 610124	L	SCREW	2J02
AB 614061	L	DRIVE SCREW NO.14 X 0.75 LONG	2G10
AB 614061	L	SCREW	2G11
AB 614061	L	SCREW	2G11
AB 614061	L	SCREW	2J14
ABU 1361		WASHER	1N10
AC 606041	L	DRIVE SCREW	2G14
AC 606041	L	SCREW	2H03
AC 606041	L	DRIVE SCREW	2H16
AC 606051	L	DRIVE SCREW NO.6 X 0.625	2G17
AC 610121	L	DRIVE SCREW NO.10 X 1.5	2G05
ACU 1161		AVDELOK BOLT	2H11
ACU 1762		MONOBOLT	2H11
ACU 2063		RIVET	2H11
ACU 3530		AVDELOK BOLT	2H11
ACU 3530		AUDELOK BOLT	2H13
ACU 3777		MONOBOLT	2H09
AD 604031	L	SCREW NO.4 X 0.375 LONG	2H04
AD 606041	L	SCREW	2I03

PART NUMBER		DESCRIPTION	REF.NO.
AD 606051	L	POZIDRIVE SCREW	2J02
ADU 1402	L	NON RETURN VALVE	1F07
AE 606051		SCREW	2K05
AE 606051		SCREW	2L05
AEU 1034		VACUUM UNIT	2E03
AEU 1043		SERVO UNIT-BRAKE	1L07
AEU 1043		SERVO UNIT	1L08
AEU 1043		SERVO UNIT	2L13
AEU 1044		ROLL PIN	1L08
AEU 1044		ROLL PIN BRAKE MASTER CYL	2L13
AEU 1045		RESERVOIR	1L08
AEU 1045		FLUID RESERVOIR KIT FOR MASTER CYL	2L13
AEU 1046		ADAPTOR-SERVO	1L07
AEU 1046		NON RETURN VALVE KIT	1L08
AEU 1046		NON-RETURN VALVE KIT	2L13
AEU 1047		REPAIR KIT,BRAKE M/CYL	1L08
AEU 1047		BRKE MASTER CYL SERVICE KIT 109	2L13
AEU 1058		LENS FLASHER LAMP REAR	2F04
AEU 1061		HEADLAMP COMPLETE	2F02
AEU 1124		DISTIBUTOR ASSEMBLY	2E04
AEU 1147	L	CENTRE SEAL LOWER	1N09
AEU 1169		KNOB FOR SWITCH	2F09
AEU 1355		HEADLAMP COMPLETE	2F02
AEU 1367		RETAINER-STARTER-BENDIX SPRING	2E07
AEU 1367		RETAINER-BENDIX SPRING STARTER	2E08
AEU 1421		LEAD-LOW TENSION-DISTRIBUTOR	2E06
AEU 1422		VACUUM UNIT-DISTRIBUTOR	2E06
AEU 1428		BRUSH AND SPRING-DISTRIBUTOR	2E03
AEU 1447		CLIP	2G04
AEU 1448		CLIP	1L06
AEU 1448		CLIP-FUEL PIPE	1N13
AEU 1448		CLIP-FUEL PIPE	1N13
AEU 1448		CLIP-FUEL PIPE	1N17
AEU 1448		CLIP	2L08
AEU 1448		CLIP	2L12
AEU 1448		CLIP	2L14
AEU 1448		CLIP	2L15
AEU 1449		CLIP	1N11
AEU 1449		CLIP-FUEL PIPE	1N13
AEU 1449		CLIP-FUEL PIPE	1N13
AEU 1449		CLIP	2L08
AEU 1449		CLIP	2L15
AEU 1450		CABLE CLIP	1L16
AEU 1450		CABLE CLIP	2L08
AEU 1450		CLIP-'P'TYPE	2L16

PART NUMBER		DESCRIPTION	REF.NO.
AEU	1451	CLIP	2L08
AEU	1476	METERING NEEDLE	1M10
AEU	1487	CASING-REAR AXLE	1J12
AEU	1488	CROWN WHEEL AND PINION	1J13
AEU	1489	CASE-DIFFERENTIAL	1J13
AEU	1565	ARMATURE-ALTERNATOR	2E10
AEU	1565	ARMATURE-ALTERNATOR	2E12
AEU	1565	ARMATURE	2E14
AEU	1581	CLIP	2D02
AEU	1581	CLIP	2L08
AEU	1582	SLIDING JOINT	1J14
AEU	1583	SLIDING JOINT	1J04
AEU	1584	RUBBER GAITER	1J04
AEU	1586	CVER BRKT FOR STARTER MOTOR	2E07
AEU	1586	CAP-STARTER MOTOR END	2E08
AEU	1589	GASKET KIT	1M11
AEU	1613	SOLENOID LEVER AND PINION	2E09
AEU	1649	SOLENOID FOR STARTER MOTOR	2E09
AEU	1652	LAMP-NUMBER PLATE	2F04
AEU	1684	VACUUM UNIT-DISTRIBUTOR	2E03
AEU	1750	LINING CLUTCH	1G03
AEU	1804	NEEDLE METERING	1M07
AEU	1827	STUB SHAFT	1J05
AEU	1828	CV JOINT	1J05
AEU	1829	SHAFT RH	1J05
AEU	1830	SHAFT LH	1J05
AEU	1846	SPECIAL SCREW-THROTTLE STOP	1M02
AEU	1880	BRAKE LINING SET	1L04
AEU	1945	THERMAL SENSOR	1N05
AEU	1977	LOCKNUT-THROTTLE STOP	1M02
AEU	1978	THROTTLE SPINDLE	1M02
AEU	1979	SOLENOID	1M02
AEU	1980	VOLUME CONTROL SCREW	1M02
AEU	1983	MAIN JET	1M03
AEU	1985	CARB JET-EMULSION BLOCK	1M03
AEU	1994	VACUUM UNIT-DISTRIBUTOR	2E03
AEU	1997	UNIVERSAL JOINT(DOUBLE)	1J04
AEU	1998	CENTREING DEVICE	1J04
AEU	2515	OIL SEAL	1J12
AEU	2597	NUT AND GASKET ASSEMBLY	1N04
AEU	2760	REPAIR KIT FOR FUEL PUMP	1N06
AEU	2760	REPAIR KIT FOR FUEL PUMP	1N10
AEU	2760	REPAIR KIT FOR FUEL PUMP	2L07
AEU	2792	DRIVE ASSEMBLY FOR STARTER	2E09
AEU	3079	SURGE-PROTECTION DEVICE-	2E16

PART NUMBER		DESCRIPTION	REF.NO.
AEU 3080		EMULSION BLOCK	1M03
AEU 3081		ADJUSTING TOOL-THROTTLE STOP	1M02
AEU 3082		NEEDLE VALVE	1M03
AEU 3083		RELAY LEVER	1M02
AEU 4003		OVERHAUL KIT-CARBURETTER	1M02
AFU 1003		SPANNER BOX	2L11
AFU 1004		SPANNER-DOUBLE END	2L11
AFU 1005		SPANNER-DOUBLE END	2L11
AFU 1024	L	COMBINATION PLIERS	2L11
AFU 1035		SCREW	2G18
AFU 1036		SCREW	2G18
AFU 1068		BOLT	1L04
AFU 1069		WASHER	1013
AFU 1069		WASHER-PLAIN	1007
AFU 1069		WASHER-PLAIN	1011
AFU 1070		PLAIN WASHER	2K07
AFU 1071		WASHER-PLAIN	2I04
AFU 1078		WASHER PLAIN	2I02
AFU 1079		WASHER PLAIN	2C11
AFU 1079		WASHER-PLAIN	2I15
AFU 1080		WASHER-PLAIN	2K05
AFU 1088		SCREW	2F09
AFU 1174		BLANKING PLUG	1L16
AFU 1202		AIR INJECTION PUMP	2L17
AFU 1203		BOLT	2G06
AFU 1248		WASHER-PLAIN	2J02
AFU 1248		WASHER-PLAIN	2J03
AFU 1256		WASHER-PLAIN	2H17
AFU 1263		WASHER-PLAIN	2K05
AFU 1302		BATTERY-15 PLATE	2F12
AFU 1303		BATTERY-15 PLATE	2F12
AFU 1331		AIR INJECTION PUMP	2L18
AFU 1497		DISTANCE PIECE	2I04
AFU 1841		MONOBOLT	2H11
AFU 1844		MONOBOLT	2H13
AFU 1882		JOINT WASHER	1C02
AFU 1882	L	WASHER-JOINT	1E02
AFU 1887		WASHER JOINT	1C11
AFU 1887	L	WASHER JOINT	1E11
AFU 1890		WASHER JOINT	1C11
AFU 1890	L	WASHER JOINT	1E11
AFU 1900		SCREW	2K09
AFU 2501		PLUG	2K05
AFU 2501		PLUG	2L05
AFU 2503		TURN BUCKLE	2L04

PART NUMBER		DESCRIPTION	REF.NO.
AFU 2504		CATCH PLATE	2L04
AFU 2651		WASHER-PLAIN	2K07
AFU 2651		WASHER-PLAIN	2K08
AFU 2679		SCREW	2J14
AFU 2679		SCREW	2J14
AFU 2879		CLIP	2F14
AJ 614041		SPIRE NUT	2G10
AK 608041	L	CAPTIVE NUT	1O14
AK 610021	L	SPRING NUT	2H03
AK 610021	L	SPRING NUT	2H06
AK 610021	L	SPRING NUT	2H08
AK 616011		SPIRE NUT	2G07
AM 605061		BOLT SPECIAL-WING TO DASH	2G08
AR 606031	L	SCREW	2H12
AR 608041	L	DRIVE SCREW NO 8 X 0.500	1O14
AR 608041	L	SCREW NO 8 X 0.500 ¢LONG	2F07
AR 608047		SCREW	2F07
AR 608061		SCREW	2I04
AR 610051	L	SELF TAPPING SCREW	2H03
AR 610051	L	SCREW	2H06
AR 610051	L	SCREW	2H08
AR 610051	L	SCREW	2H13
ARA 1501	L	LOCKING RING FOR FUEL GAUGE	1O03
ARA 1501	L	RETAINER-FUEL TANK GAUGE	1O04
ARA 1501	L	LOCKING RING-FUEL GAUGE	1O06
ARA 1502	L	SEALING RING FOR FUEL GAUGE	1O03
ARA 1502	L	GASKET-FUEL TANK GAUGE	1O04
ARA 1502	L	SEALING RING-FUEL GAUGE	1O06
ARA 2404	L	FILLER PLUG	2D03
ASU 1302		BATTERY	2F12
AUA 573	L	JOINT WASHER-DISHED COVER	1N07
AUB 654	L	WASHER	1N07
AUB 656	L	DIAPHRAGM FOR AIR BOTTLE	1N07
AUB 657	L	SEALING RING-AIR BOTTLE COVER	1N07
AUB 676	L	SEALING WASHER-VALVE ASSY	1N07
AUB 795	L	JOINT WASHER AIR BOTTLE	1N07
AUB 809	L	JOINT WASHER DIAPHRAGM TO BODY	1N07
AUB 6106		CONTACT SET FUEL PUMP	1N07
AUB 9011	L	COVER FOR FUEL PUMP	1N07
AUD 2437	L	LEVER	1M12
AZX 1500		FUEL PUMP COMPLETE	1N07
BAU 1689		CLIP	1N11
BAU 1689		CLIP	2L08
BAU 1689		CLIP	2L15
BD 44001	L	PLUG	1L06

PART NUMBER		DESCRIPTION	REF.NO.
BD 44001	L	SEALING PLUG	2L09
BD 44001	L	PLUG-BLANKING	2L12
BD 155888	L	SEALING PLUG	2L09
BH 106051	L	BOLT	1F02
BH 106051	L	BOLT	1G04
BH 106051	L	BOLT	1K04
BH 106061	L	BOLT	1L09
BH 106061	L	BOLT	1L10
BH 106061	L	BOLT	1L11
BH 106061	L	BOLT	1L12
BH 106061	L	BOLT	1L13
BH 106061	L	BOLT	2C11
BH 106071		BOLT	1013
BH 106071		BOLT	2J14
BH 106071	L	BOLT	1007
BH 106071	L	BOLT	1011
BH 106071	L	BOLT	2I02
BH 106081	L	BOLT	2H05
BH 106081	L	BOLT	2L14
BH 106081	L	BOLT	2L15
BH 106091	L	BOLT FIXING BRACKET	2L12
BH 106101		BOLT	1L11
BH 106101		BOLT	1L13
BH 106111	L	BOLT	2H13
BH 106121		BOLT	2H13
BH 106131	L	BOLT	1C10
BH 106131	L	BOLT	1E10
BH 106141	L	BOLT	1C10
BH 106161	L	BOLT	1014
BH 108061	L	BOLT	1C04
BH 108061	L	BOLT	1E05
BH 108061	L	BOLT	1I03
BH 108061	L	BOLT	1I12
BH 108081	L	BOLT	2C03
BH 108081	L	BOLT	2C11
BH 108091	L	BOLT	1E08
BH 108091	L	BOLT	2C11
BH 108101	L	BOLT	1C07
BH 108101	L	BOLT	1C13
BH 108101	L	BOLT	1E08
BH 108111	L	BOLT	1E06
BH 108111	L	BOLT	2H10
BH 108141	L	BOLT	1C13
BH 108141	L	BOLT	1E08
BH 108151	L	SET BOLT	1C06

PART NUMBER		DESCRIPTION	REF.NO.
BH 108151	L	BOLT	1C07
BH 108151	L	BOLT	1E08
BH 108161	L	BOLT	1C07
BH 108161	L	BOLT	1E08
BH 108161	L	BOLT	2E11
BH 108161	L	BOLT	2E15
BH 108171	L	BOLT	1C07
BH 108171	L	BOLT	1E08
BH 108181	L	BOLT	1C07
BH 108201	L	BOLT	1I05
BH 108201	L	BOLT	1I05
BH 108201	L	BOLT	1I05
BH 108251	L	BOLT	1E09
BH 108351		BOLT	2H13
BH 110071	L	BOLT	1G02
BH 110071	L	BOLT	1I11
BH 110081	L	BOLT	1K05
BH 110091	L	BOLT	1G03
BH 110091	L	BOLT	2E09
BH 110101	L	BOLT	2L03
BH 110121	L	BOLT	1I10
BH 110121	L	BOLT	1I11
BH 110121	L	BOLT	2L02
BH 110161	L	BOLT	2L02
BH 110241	L	BOLT	2L03
BH 112101	L	BOLT	1J07
BH 112121	L	BOLT	1I02
BH 116161	L	BOLT	1I02
BH 116261		BOLT	2L03
BH 408181		BOLT	2L02
BH 504101	L	BOLT	1F10
BH 504101	L	BOLT	1F11
BH 504121	L	BOLT	1D14
BH 504121	L	BOLT(0.25"UNC X 1.50"¢LONG)	2L17
BH 504161	L	BOLT	1F10
BH 504161	L	BOLT	1F11
BH 505111	L	BOLT	1M11
BH 505111	L	BOLT	2E16
BH 505121	L	BOLT	1F10
BH 505121	L	BOLT	1F11
BH 505201	L	BOLT 0.3125 UNC X 2.5 LONG	1N02
BH 505241	L	BOLT	1F04
BH 505241	L	BOLT(0.3125" UNC X 3")	1N02
BH 505381	L	BOLT	1F10
BH 505381	L	BOLT	1F11

PART NUMBER		DESCRIPTION	REF.NO.
BH 505401	L	BOLT	1F10
BH 505401	L	BOLT	1F11
BH 506111	L	BOLT	2E16
BH 506121	L	BOLT	1F07
BH 506161	L	BOLT	1F07
BH 506161	L	BOLT	1I02
BH 506201	L	BOLT	2E16
BH 506221	L	BOLT	1F08
BH 604081		BOLT	2H12
BH 604081	L	BOLT(0.25"UNF X 1")	1D10
BH 604091	L	BOLT(0.25"UNF X 1.25")	1D10
BH 604091	L	BOLT	1E10
BH 604091	L	BOLT	1F12
BH 604091	L	BOLT	2L13
BH 604101	L	BOLT	1D10
BH 604101	L	BOLT	1L09
BH 604101	L	BOLT	1007
BH 604101	L	BOLT	1009
BH 604101	L	BOLT	1010
BH 604101	L	BOLT	1011
BH 604101	L	BOLT	1014
BH 604101	L	BOLT 0.25 UNF X 1.25"	2L17
BH 604111	L	BOLT(0.25" UNF X 1.375")	1D06
BH 604121	L	BOLT 0.25 UNF X 1.50 LONG	2H05
BH 604141	L	BOLT(0.25"UNF X 1.625")	1D10
BH 604141	L	BOLT	1L12
BH 604161	L	BOLT(0.25" UNF X 1.875")	1K06
BH 604161	L	BOLT	1K07
BH 604161	L	BOLT	1K08
BH 604161	L	BOLT	2K04
BH 604161	L	BOLT	2K05
BH 604181	L	BOLT(0.25"UNF X 1.125")	1D10
BH 604181	L	BOLT	2H13
BH 604201	L	BOLT	1C10
BH 604201	L	BOLT	1E10
BH 605101	L	BOLT	1C04
BH 605101	L	BOLT	1E05
BH 605111	L	BOLT	2K06
BH 605121	L	BOLT	1D15
BH 605121	L	BOLT	1F03
BH 605121	L	BOLT	1H13
BH 605121	L	BOLT	1L07
BH 605121	L	BOLT	2C03
BH 605121	L	BOLT	2C10
BH 605121	L	BOLT(0.3125"UNF X 1.50")	2E11

PART NUMBER		DESCRIPTION	REF.NO.
BH 605121	L	BOLT	2E13
BH 605121	L	BOLT	2E15
BH 605121	L	BOLT	2E16
BH 605141	L	BOLT	1E08
BH 605161	L	BOLT	1C07
BH 605161	L	BOLT(0.3125"UNF X 2")	1C13
BH 605161	L	BOLT	1D09
BH 605161	L	BOLT	1D13
BH 605161	L	BOLT	1E06
BH 605161	L	BOLT	1E08
BH 605161	L	BOLT(0.3125"UNF X 1.875")	2E11
BH 605161	L	BOLT	2E15
BH 605161	L	BOLT	2H16
BH 605161	L	BOLT	2I02
BH 605201	L	BOLT	2E16
BH 605221	L	BOLT(0.3125" UNF X 2.75")	1C13
BH 605241	L	SET BOLT	1C07
BH 605241	L	BOLT	1E08
BH 605261	L	BOLT	1C07
BH 605261	L	BOLT	1E08
BH 605261	L	BOLT	2E11
BH 605261	L	BOLT	2E15
BH 605281	L	BOLT	1C07
BH 605317		BOLT 0.3125 X 3.875"	1K04
BH 605321	L	BOLT	1E08
BH 605321	L	BOLT	1E09
BH 605381		BOLT 0.3125 UNF X 4.75"	2L17
BH 605381	L	BOLT	1D14
BH 606111	L	BOLT	1006
BH 606121	L	BOLT	1002
BH 606121	L	BOLT	1003
BH 606121	L	BOLT	1005
BH 606121	L	BOLT	1006
BH 606141	L	BOLT 0.375" UNF X 1.75"	1G03
BH 606181	L	BOLT 0.375 UNF X 2.25"	1L14
BH 606181	L	BOLT	2C05
BH 606201	L	BOLT(0.375"UNF X 2.50")	1002
BH 606201	L	BOLT	1003
BH 606201	L	BOLT	1005
BH 606201	L	BOLT	1006
BH 606281	L	BOLT	1D15
BH 606281	L	BOLT	2G02
BH 607141	L	BOLT (0.437" UNF X 2")	2E09
BH 607241	L	BOLT(0.4375"UNF X 3")	1D13
BH 607281	L	BOLT(0.4375"UNF X 3.50")	1D13

PART NUMBER		DESCRIPTION	REF.NO.
BH 608241	L	BOLT	2L02
BHA 4790	L	STRAP	2F06
BHM 1067	L	NEEDLE VALVE PACK	1M03
BHM 1079	L	CARB NEEDLE VALVE PACK	1M08
BHM 1079	L	NEEDLE VALVE PACK	1M11
BHM 1082	L	EMISSION PACK	1M07
BHM 1082	L	EMISSION PACK	1M08
BHM 7063	L	GROMMET-CLUTCH CYLINDER	1G05
BHM 7196	L	HEADLAMP COMPLETE	2F02
BLS 108	L	BALL-STEEL	1H04
BLS 108	L	BALL-STEEL	1H06
BLS 108	L	BALL-STEEL	1I03
BLS 108	L	BALL-STEERING	1I06
BLS 109	L	STEEL BALL	1K02
BLS 112	L	STEEL BALL	1K02
BMK 1903		NUT	1L06
BMK 1903		LOCKNUT	2L13
BTB 657	L	TEE PIECE	1L09
BTB 657	L	TEE PIECE	1L12
BX 406121		BOLT	1L03
BX 604221	L	BOLT 0.25 UNF X 2.75	1C10
BX 604221	L	BOLT(0.25"UNF X 2.75")	1D10
BX 605281		BOLT(0.3125" UNF X 3.50")	1K05
BX 607181		BOLT(0.4375" UNF X 2.25")	1K05
C 3964	L	CIRCLIP FOR GUDGEON PIN	1D04
C 36617	L	TENSIONER	1D06
C 37222	L	FAN-ALTERNATOR	2E16
C 41866	L	EXHST GAS RECIRULATING VLVE	2L12
C 43640	L	CABLE TIE	2F14
C 45099	L	RATCHET STRAP	1N08
CA 600424		CLIP,TUBE TO AIR CLEANER AND	1N04
CCN 110	L	CIRCLIP FOR CROSS SHAFT	1J08
CCN 112	L	CIRCLIP	1L15
CCN 122		CIRCLIP	1H07
CCN 260		CIRCLIP	1I06
CD 31709	B	KEY BLANK	2G15
CD 31709	C	KEY CUT	2G15
CD 31726	B	KEY-BLANK-REAR DOOR LOCK	2H18
CD 31726	C	KEY CUT	2F09
CD 31726	C	KEY-CUT-REAR DOOR LOCK	2H18
CJ 600144	L	HOSE CLIP	1F08
CJ 600384	L	CLIP	1J04
CN 100208	L	CLIP	1C14
CN 100408	L	CLIP	1C10
CN 100408	L	HOSE CLIP	1E10

PART NUMBER		DESCRIPTION	REF.NO.
CN 100508		CLIP	1J04
CN 100508		HOSE CLIP	1N06
CN 100508		HOSE CLIP-FUEL FILLER	1N14
CN 100508		HOSE CLIP-FUEL FILLER	1N15
CN 100508		HOSE CLIP-FUEL FILLER	1N16
CN 100508		HOSE CLIP-FUEL FILLER PIPE	1N17
CN 100508		HOSE CLIP	2D02
CN 100508		HOSE CLIP	2D04
CN 100508	L	CLIP	1D10
CP 105161	L	CLIP	1013
CP 105161	L	CLIP-EXPANSION HOSE	2D04
CP 106101		CLIP	2D04
CRC 1226		CLIP-PIPE	1F06
CRC 1226		CLIP	1N12
CRC 1250		PIPE CLIP	1L09
CRC 1250		PIPE CLIP	1L10
CRC 1250		PIPE CLIP	1L11
CRC 1250		PIPE CLIP-SINGLE	1L12
CRC 1250		PIPE CLIP	1L13
CRC 2131		VACUUM HOSE	1L07
CRC 2131		VACUUM HOSE	2L17
CZK 9845	L	INTERIOR DRIVING MIRROR	2I03
CZX 1004		DIODE RESISTOR SUPPRESSOR	1N07
DRC 1596		TRANSMITTER-OIL PRESSURE	1F05
DRC 1820		RELAY	2F02
DRC 2479		TRANSMITTER-OIL PRESSURE	1F05
ERC 210		SEAT-VALVE EXHAUST STANDARD	1F09
ERC 211		SEAT-VALVE EXHAUST 0.010" O/S	1F09
ERC 215		CYLINDER HEAD	1F09
ERC 224		SEAT-VALVE INLET STANDARD	1F09
ERC 225		SEAT-VALVE INLET 0.010" O/S	1F09
ERC 256		CUP PLUG	1D11
ERC 256		CUP-PLUG	1F06
ERC 298		HOSE	1C09
ERC 416		WASHER	1F03
ERC 417		BOLT	1F03
ERC 573		RETAINER-VALVE SPRING	1F05
ERC 614		BRACKET-ENGINE LIFTING	1F10
ERC 676		CYLINDER HEAD	1F09
ERC 783		SCREEN COVER FOR DISTRIBUTOR	2E04
ERC 783		COVER-DISTRIBUTOR SUPPRESSION	2E05
ERC 783		SCREEN COVER FOR DISTRIBUTOR	2L17
ERC 1027		CONNECTING ROD NUT	1D04
ERC 1029		NUT-CONNECTING ROD	1E03
ERC 1351		SHAFT AND GEAR-OIL PUMP	1F05

PART NUMBER		DESCRIPTION	REF.NO.
ERC 1353		DOG-DISTRIBUTOR DRIVING	2E06
ERC 1373		VISCOUS FAN	1E10
ERC 1454		AIR TUBE ASSEMBLY	1D14
ERC 1454		AIR TUBE ASSEMBLY	2L17
ERC 1456		MANIFOLD ADAPTOR	1D14
ERC 1456		EXHAUST MANIFOLD ADAPTOR-FRT	2L17
ERC 1460		MANIFOLD ADAPTOR	1D14
ERC 1460		EXHAUST MANIFOLD ADAPTOR-RR	2L17
ERC 1469		HEAT SHIELD FOR DISTRIBUTOR	2L17
ERC 1469		HEAT SHIELD FOR DISTRIBUTOR	2E05
ERC 1561		CAMSHAFT THRUST PLATE	1C05
ERC 1561		PLATE-RETAINING CAMSHAFT	1E05
ERC 1637		SPLIT CONE-VALVE HALVES	1F05
ERC 1742		FAN AND ALTERNATOR BELT	1D10
ERC 1742		FAN AND ALTERNATOR BELT	2L17
ERC 1837		DISTRIBUTOR	2L17
ERC 1837		DISTRIBUTOR COMPLETE	2E05
ERC 1935		ADAPTOR CARB TO CYLINDER HEAD	1M07
ERC 1935		ADAPTOR-CARBURETTER TO	2L17
ERC 1936		SUPPORT PLATE SOLENOID	1M07
ERC 1936		SUPPORT PLATE FOR SOLENOID	2L17
ERC 2003		CAMSHAFT	1F06
ERC 2042		FUEL TRAP	1M08
ERC 2042		FUEL TRAP	2L17
ERC 2069		COVER FRONT-ENGINE	1F04
ERC 2139		PIPE-WATER OUTLET	1F07
ERC 2143		OUTLET PIPE	1F07
ERC 2144		SPACER-SECURING H.T. LEAD	2L18
ERC 2151		STUD-SPECIAL	1E07
ERC 2194		VACUUM PIPE	1M09
ERC 2209		SUMP-ENGINE OIL	1E07
ERC 2210		NUT-SPECIAL	1E07
ERC 2250		TIMING POINTER	1G03
ERC 2254		ENGINE LIFTING BRACKET FRONT	1C11
ERC 2254		BRACKET-ENGINE LIFTING-FRONT	1E11
ERC 2275		ENGINE LIFTING BRKT REAR-SIDE	1D12
ERC 2280		ENGINE LIFTING BRACKET FRONT	1D12
ERC 2297		CONNECTION	1F06
ERC 2319		HOSE-WATER	1F07
ERC 2320		HOSE	1F07
ERC 2337	S	PISTON ASSY STD	1D04
ERC 2339	S	PISTON ASSY STD	1D04
ERC 2363		MOUNTING BRACKET FRONT	2E13
ERC 2363		MOUNTING BRACKET-FRONT	2L17
ERC 2364		MOUNTING BRACKET REAR	2E13

PART NUMBER		DESCRIPTION	REF.NO.
ERC	2364	MOUNTING BRACKET-REAR	2L17
ERC	2369	DISTANCE PIECE	1D14
ERC	2369	DISTANCE PIECE FOR AIR PUMP	2L17
ERC	2370	FAN PULLEY	1D10
ERC	2370	FAN PULLEY	1D11
ERC	2370	FAN PULLEY	2L17
ERC	2429	BAFFLE-SUMP	1E07
ERC	2429	BAFFLE SUMP	1E08
ERC	2434	JOINT WASHER-ENGINE OIL SUMP	1E07
ERC	2435	RETAINER-ENGINE OIL SUMP	1E07
ERC	2436	RETAINER-ENGINE OIL SUMP	1E07
ERC	2437	RETAINER-ENGINE OIL SUMP	1E07
ERC	2443	PUMP ASSEMBLY-OIL	1F05
ERC	2446	COUNTERSHAFT AND LEVER	1M12
ERC	2456	HOSE	1D14
ERC	2456	HOSE-AIR PUMP TO CHECK VALVE	2L17
ERC	2523	HT LEAD SET	2E04
ERC	2523	LEADS-DISTRIBUTOR-HIGH TENSION	2E05
ERC	2600	EXHAUST GAS DAMPER ASSEMBLY	2L12
ERC	2604	HOSE EGR VALVE TO CARBURETTER	2L12
ERC	2605	MOUNTING BRACKET EGR VALVE	2L12
ERC	2607	HOSE ELBOW TO FLAME TRAP	2L12
ERC	2653	PULLEY	2L18
ERC	2657	AIR INJECTOR PUMP	1D14
ERC	2657	AIR INJECTION PUMP	2L17
ERC	2658	BRACKET	1D14
ERC	2658	ADJUSTING BRACKET FOR AIR	2L17
ERC	2659	BRACKET	1D14
ERC	2659	ADJUSTING BRACKET FOR AIR	2L17
ERC	2660	BRACKET	1D14
ERC	2660	ANCHOR BRACKET FOR AIR PUMP	2L17
ERC	2661	BRACKET	1D14
ERC	2661	SUPPORT BRACKET FOR AIR PUMP	2L17
ERC	2662	FAN BELT	1D14
ERC	2662	DRIVING BELT FOR AIR PUMP	2L17
ERC	2690	TUBE-DIPSTICK	1F02
ERC	2695	AIR INLET ELBOW	2L16
ERC	2696	PLATE-ROCKER SHAFT	1C06
ERC	2735	TEE PIECE	1C14
ERC	2735	T PIECE	1M09
ERC	2838	KEY-WOODRUFF	1F06
ERC	2839	SPACER-CAMSHAFT CHAINWHEEL	1F06
ERC	2849	VISCOUS COUPLING UNIT	1D10
ERC	2849	VISCOUS COUPLING UNIT FOR FAN	1D11
ERC	2849	VISCOUS DRIVE UNIT	1F12

PART NUMBER		DESCRIPTION	REF.NO.
ERC	2849	VISCOUS COUPLING FOR FAN	2L17
ERC	2866	TOP ROCKER COVER	1C12
ERC	2867	BREATHER-TOP ROCKER	1C12
ERC	2869	BLANKING PLATE	1C08
ERC	2869	SIDE COVER	1C09
ERC	2870	HOSE	1C09
ERC	2871	HOSE	1C09
ERC	2875	PLUG	1C09
ERC	2876	CARBURETTER ELBOW	1C09
ERC	2886	CARBURETTER COMPLETE	1M02
ERC	2915	VACUUM PIPE	2L15
ERC	2974	ADAPTOR ASSEMBLY	1C09
ERC	3093	AIR PIPE CARBURETTER TO DISTRIBUTOR	1M07
ERC	3093	AIR PIPE-CARBURETTER TO	2L17
ERC	3094	FUEL PIPE	1M08
ERC	3094	VACUUM PIPE	2L15
ERC	3094	AIR PIPE-FUEL TRAP TO	2L17
ERC	3095	AIR PIPE	1M08
ERC	3095	AIR PIPE-CARBURETTER TO	2L17
ERC	3101	EXHAUST MANIFOLD RH	1F08
ERC	3163	CLIP	1F06
ERC	3163	BRACKET	1M12
ERC	3179	TUBE-ENGINE OIL FILTER	1F10
ERC	3192	ADAPTOR CARBURETTER TO EGR VALVE	2L12
ERC	3233	TEE PIECE	1C09
ERC	3251	DISTRIBUTOR COMPLETE	2L12
ERC	3256	IGNITION LEAD SET	2E02
ERC	3256	LEADS-DISTRIBUTOR-HIGH TENSION	2E03
ERC	3305	CARB COMPL WITH THROTTLE JACK	1M07
ERC	3315	BOLT-SPECIAL	1E07
ERC	3315	PLUG	1E08
ERC	3316	BOLT-SPECIAL	1E07
ERC	3316	PLUG	1E08
ERC	3324	CLIP	1D12
ERC	3324	CLIP FIXING HOSE TO STUD ON	2L17
ERC	3325	ROCKER COVER	1D12
ERC	3342	DISTRIBUTOR ASSEMBLY	2E06
ERC	3343	HOSE	1D12
ERC	3343	HOSE-ROCKER COVER BREATHER	2L17
ERC	3458	STUD	1F09
ERC	3482	EXHAUST MANIFOLD LH	1F08
ERC	3489	HOSE WATER	1F07
ERC	3493	RESTRICTOR	1F07
ERC	3525	AIR MANIFOLD	1D14
ERC	3525	AIR MANIFOLD ASSEMBLY	2L17

PART NUMBER		DESCRIPTION	REF.NO.
ERC	3561	PIPE-WATER OUTLET	1F06
ERC	3562	HOSE WATER	1F07
ERC	3563	CONNECTING WATER PIPE	1F07
ERC	3588	AIR TUBE	1M12
ERC	3600	PULLEY CRANKSHAFT	1C03
ERC	3600	PULLEY-CRANKSHAFT	1E03
ERC	3690	STUD	1F08
ERC	3690	STUD	1F09
ERC	3699	WASHER PLAIN	1F08
ERC	3729	CLIP	1F07
ERC	3788	NON-RETURN VALVE	1N10
ERC	3892	SUPPORT BRACKET ASSEMBLY-¢LH-FOR	1N04
ERC	3893	SUPPORT BRACKET ASSEMBLY-¢RH-FOR	1N04
ERC	3895	AIR CLEANER 'CYCLONE'	1N04
ERC	3896	BAFFLE ASSEMBLY	1N04
ERC	3897	RETAINING STRAP	1N04
ERC	3899	AIR SEAL	1N04
ERC	3930	HOSE	1M13
ERC	3931	HOSE	1M13
ERC	3946	RETAINING STRAP	1N04
ERC	3954	HOSE-BREATHER TO FILTER	1N04
ERC	3955	HOSE-FILTER TO AIR CLEANER	1N04
ERC	3978	SPINDLE WATER PUMP	1D09
ERC	3980	SUPPORT BRACKET FOR JUMP HOSE	1G04
ERC	3990	GASKET-INLET MANIFOLD	1F07
ERC	4181	INTAKE ELBOW	1N05
ERC	4182	VIBRATION DAMPER	1D04
ERC	4199	OIL LEVEL ROD	1C07
ERC	4199	DIPSTICK	1E07
ERC	4199	DIPSTICK	1E08
ERC	4203	AIR TUBE	1M12
ERC	4204	AIR TUBE	1M12
ERC	4374	INSULATOR	1M09
ERC	4375	WASHER JOINT	1M09
ERC	4383	INLET-MANIFOLD	1F06
ERC	4387	ENGINE LIFTING BRACKET REAR	1D12
ERC	4397	DEFLECTOR	1N06
ERC	4400	AIR CONTROL VALVE	1N06
ERC	4419	CARBURETTER COMPLETE	1M02
ERC	4480	FUEL LEAK OFF PIPE	1N13
ERC	4480	FUEL LEAK OFF PIPE	1N13
ERC	4484	GASKET-HOT AIR HOUSING	1F08
ERC	4494	HOUSING-HOT AIR	1F08
ERC	4506	HEATSHIELD	1F09
ERC	4558	DIPSTICK	1F02

PART NUMBER		DESCRIPTION	REF.NO.
ERC	4571	AIR CLEANER	1N05
ERC	4644	DOWEL FLYWHEEL HOUSING	1C02
ERC	4644	DOWEL	1E02
ERC	4650	DOWEL	1C03
ERC	4650	DOWEL	1E03
ERC	4658	PLATE-REFORCING-FLYWHEEL	1G02
ERC	4658	PLATE-REINFORCING-FLYWHEEL	1G03
ERC	4670	BRACKET	1M13
ERC	4672	STARTING DOG	1C03
ERC	4672	STARTING DOG	1E03
ERC	4702	CARBURETTER LH	2L18
ERC	4703	CARBURETTER RH	2L18
ERC	4707	CYLINDER HEAD	1D11
ERC	4709	CUP PLUG	1D11
ERC	4720	EXHAUST MANIFOLD RH	1F08
ERC	4794	HEAT SHIELD CARBURETTER RH	2L18
ERC	4809	ADAPTOR	1F07
ERC	4809	ADAPTOR-VACUUM NON-RETURN	2L18
ERC	4819	INLET-MANIFOLD	1F06
ERC	4819	INLET MANIFOLD ASSEMBLY	2L18
ERC	4820	ADAPTOR-AIR BLEED	1F06
ERC	4820	ADAPTOR-INLET MANIFOLD	2L18
ERC	4823	DISTRIBUTOR COMPLETE	2L18
ERC	4825	LOCKNUT-ELBOW-INLET MANIFOLD	2L18
ERC	4848	CARBURETTER COMPLETE	2L17
ERC	4877	WEIGHT BALANCE-CRANKSHAFT	1F03
ERC	4878	WEIGHT BALANCE-CRANKSHAFT	1F03
ERC	4879	WEIGHT BALANCE-CRANKSHAFT	1F03
ERC	4880	WEIGHT BALANCE-CRANKSHAFT	1F03
ERC	4935	INSERT-EXHAUST VALVE SEAT	1D03
ERC	4935	INSERT-EXHAUST VALVE SEAT	2L17
ERC	4949	TAPPET-VALVE	1F05
ERC	4970	TOP ROCKER COVER ASSEMBLY	2L17
ERC	4989	GASKET-HOT AIR HOUSING	1F08
ERC	4996	PLUG	1C02
ERC	4996	CUP PLUG	1E02
ERC	5014	CRANKSHAFT STD	1C03
ERC	5014	CRANKSHAFT	1E03
ERC	5037	HOUSING-FLYWHEEL	1G03
ERC	5052	HOSE-AIR INLET DUCT TO ELBOW	1N04
ERC	5086	SEAL-MAIN BEARING	1C02
ERC	5086	SEALING-REAR MAIN BEARING	1E02
ERC	5088	DISTRIBUTOR ASSEMBLY	2E06
ERC	5169	PULLEY	1D14
ERC	5169	PULLEY FOR AIR PUMP	2L17

PART NUMBER			DESCRIPTION	REF.NO.
ERC	5247		AIR INTAKE ELBOW	1N04
ERC	5263	N	ENGINE COMPLETE ASSY DIESEL	1E02
ERC	5266		CYLINDER HEAD 8:1 CR	1C11
ERC	5329		CARBURETTER COMPLETE	1M09
ERC	5330		CARBURETTER COMPLETE	1M09
ERC	5349		CRANKSHAFT PULLEY	1C03
ERC	5349		PULLEY-CRANKSHAFT	1E03
ERC	5361		TIMING POINTER AT FRONT COVER	1C07
ERC	5400		ADAPTOR,AIR CLEANER	1N04
ERC	5401		CONNECTING TUBE	1N04
ERC	5453		AIR INLET DUCT	1N04
ERC	5475		CAMSHAFT	1E05
ERC	5477		AIR MANIFOLD LH ASSEMBLY	2L18
ERC	5491		CARBURETTER COMPLETE	1M09
ERC	5492		CARBURETTER COMPLETE	1M09
ERC	5494		ADAPTOR-AIR INTAKE	1M11
ERC	5504		PETROL PIPE	1M09
ERC	5504		PETROL PIPE ASSEMBLY	2L18
ERC	5505		IGNITION LEAD SET	2L18
ERC	5511		Y CONNECTION	2L18
ERC	5512		RETAINER-SPARK PLUG CABLES	2L18
ERC	5513		ADAPTOR ASSEMBLY-AIR CLEANER	2L18
ERC	5536		VENT PIPE RH	1M11
ERC	5537		VENT PIPE LH	1M11
ERC	5547		CONNECTING TUBE	2L18
ERC	5548		VENT PIPE RH-ADAPTOR Y PIECE	2L18
ERC	5549		VENT PIPE LH-ADAPTOR Y PIECE	2L18
ERC	5550		VENT PIPE-Y CONNECTION-	2L18
ERC	5551		VACUUM PIPE-EGR VALVE-TO TEE	2L18
ERC	5552		VACUUM PIPE-LH CARBURETTER	2L18
ERC	5558		CLIP-ROCKER COVER LH	2L18
ERC	5560		AIR INLET DUCT ASSEMBLY	2L18
ERC	5603		AIR INTAKE ELBOW	2L18
ERC	5610		CHOKE PIPE	1M09
ERC	5610		CHOKE CONNECTING PIPE ASSY	2L18
ERC	5761		CRANKCASE BREATHER	1F02
ERC	5761		CRANKCASE BREATHER ASSEMBLY	2L18
ERC	5786		HEATSHIELD	1F09
ERC	5869		BLANKING PLUG-AIR CLEANER	2L18
ERC	5875		HEATSHIELD	1F09
ERC	5900		CYLINDER HEAD 7:1 CR	1C11
ERC	5925		EXHAUST MANIFOLD RH	1F08
ERC	5956		HOSE-BREATHER-CRANKCASE	2L18
ERC	5957		HOSE-BREATHER FILTER-TO	2L18
ERC	5958		BRACKET BREATHER CLIP	2L18

PART NUMBER		DESCRIPTION	REF.NO.
ERC 5996		EXHAUST MANIFOLD	1C13
ERC 5998		PIPE	1N05
ERC 6081		ADAPTOR ASSEMBLY	1C09
ERC 6083		PIPE	1C14
ERC 6090		ADAPTOR	1C09
ERC 6091		BRACKET	1C14
ERC 6094		PIPE	1C14
ERC 6095		CLIP	1C14
ERC 6096		SUCTION PIPE	1C14
ERC 6112		E.G.R.VALVE	1C14
ERC 6318		VACUUM PIPE-TEE PIECE TO	2L18
ERC 6337		PLUG FOR ROCKER SHAFT END	1C06
ERC 6337		PLUG-SHAFT	1E06
ERC 6341		ROCKER SHAFT	1C06
ERC 6341		ROCKER SHAFT	1E06
ERC 6353		ELBOW	1F07
ERC 6353		ELBOW INTAKE MANIFOLD	2L18
ERC 6354		E.G.R.PIPE ASSEMBLY	1F08
ERC 6354		PIPE ASSEMBLY-EGR TO INLET	2L18
ERC 6373		HOUSING HOT AIR	1F08
ERC 6380		GASKET-CYLINDER HEAD	1C11
ERC 6392		FLYWHEEL ASSEMBLY	1G02
ERC 6432		SEAL-RING-FLYWHEEL HOUSING	1G02
ERC 6432		O RING	1G03
ERC 6551		BOLT	1G02
ERC 6551		BOLT	1G03
ERC 6552		WASHER-PLAIN	1F06
ERC 6572		CARBURETTER COMPLETE	1M02
ERC 6573		CARBURETTER ELBOW	1C09
ERC 6604		DISTRIBUTOR PUMP	1N10
ERC 6673	N	ENGINE ASSEMBLY 2.25 PETROL	1C02
ERC 6691		BANJO RING AND PIPE	1C13
ERC 6794		EXHAUST VALVE	1E06
ERC 6795		INLET VALVE	1E06
ERC 6821		WASHER	1C11
ERC 6821		WASHER	1E11
ERC 6877		AIR RAIL ASSEMBLY	1M12
ERC 6878		CHECK VALVE	1M12
ERC 6881		CONNECTION HOSE	1M12
ERC 6909		CONNECTION PIPE	1M12
ERC 6910		CONNECTION TUBE	1M12
ERC 6934		CYLINDER BLOCK	1F02
ERC 6934		CYLINDER BLOCK ASSEMBLY	2L18
ERC 6935		CYLINDER BLOCK	1F02
ERC 6996		SUCTION PIPE	1M04

PART NUMBER		DESCRIPTION	REF.NO.
ERC	6997	VALVE	1M09
ERC	6998	CARBURETTER COMPLETE	1M09
ERC	6999	CARBURETTER COMPLETE	1M09
ERC	7000	AIR CLEANER	1N05
ERC	7075	ADAPTOR	1N06
ERC	7076	AIR INTAKE HOSE	1N06
ERC	7079	DEFLECTOR	1N06
ERC	7085	HOSE	1C14
ERC	7101	ADAPTOR	1C14
ERC	7150	INLET VALVE	1C06
ERC	7151	EXHAUST VALVE	1C06
ERC	7166	HOSE	1M13
ERC	7174	EXHAUST MANIFOLD RH	1F08
ERC	7176	EXHAUST MANIFOLD RH	1F08
ERC	7295	PLUG-FLYWHEEL HOUSING	1G03
ERC	7321	WASHER LOCK	1F08
ERC	7341	HOUSING FLYWHEEL	1G02
ERC	7343	CONTROL VALVE	1C14
ERC	7530	OIL FILTER OIL PUMP	1C04
ERC	7530	STRAINER-OIL PUMP	1E04
ERC	7744	THROTTLE LINK	1M12
ERC	7865	SEALING RING	1F09
ERC	7929	CHAIN-TIMING	1F06
ERC	7940	SUPPORT BRACKET	1C04
ERC	7940	BRACKET-SUPPORT	1E04
ERC	7951	JOINT WASHER	1C10
ERC	7951	GASKET-THERMOSTAT HOUSING	1E10
ERC	7987	OIL SEAL	1C07
ERC	7987	SEAL-OIL-FRONT COVER	1E08
ERC	7987	SEAL OIL-FRONT COVER	1F04
ERC	7988	CONNECTING HOSE	1N03
ERC	7990	RESONATOR	1N03
ERC	8049	SEALING RING	1E12
ERC	8051	TOP ROCKER COVER ASSY	1E12
ERC	8119	VALVE	1M04
ERC	8154	SUMP	1E08
ERC	8155	STUD	1E08
ERC	8408	WASHER JOINT	1C04
ERC	8408	JOINT WASHER	1E04
ERC	8450	GLOWPLUG	1E11
ERC	8505	AIR CLEANER ASSEMBLY	1N04
ERC	8634	CARBURETTER COMPLETE	1M02
ERC	8663	TUBE	1E11
ERC	8751	SPECIAL BOLT	1C03
ERC	8964	BOLT	1C07

PART NUMBER		DESCRIPTION	REF.NO.
ERC	8964	BOLT	1E08
ERC	8973	ADAPTOR	1C11
ERC	8975	SPECIAL BOLT	1C04
ERC	8975	SPRING-TIMING CHAIN TENSIONER	1E05
ERC	8976	SCREW-SPECIAL	1E04
ERC	8980	TUBE	1C07
ERC	8980	TUBE-DIPSTICK	1E07
ERC	8980	TUBE-DIPSTICK	1E08
ERC	9054	ADJUSTING SCREW	1C06
ERC	9054	SCREW-TAPPET ADJUSTING	1E06
ERC	9055	ROCKER	1E06
ERC	9056	ROCKER	1E06
ERC	9059	ROCKER	1E06
ERC	9060	ROCKER	1E06
ERC	9073	SIDE COVER ASSEMBLY	1C08
ERC	9073	BLANKING PLATE	1E09
ERC	9099	CYLINDER HEAD	1C11
ERC	9102	VALVE ROCKER LH EXHAUST	1C06
ERC	9103	VALVE ROCKER RH EXHAUST	1C06
ERC	9106	VALVE ROCKER LH INLET	1C06
ERC	9107	VALVE ROCKER RH INLET	1C06
ERC	9137	BRACKET	1E06
ERC	9138	ROCKER BRACKET	1C06
ERC	9178	WATER PUMP ASSEMBLY	1C10
ERC	9178	PUMP-WATER	1E09
ERC	9188	LINER-CYLINDER	1C02
ERC	9188	LINER CYLINDER	1E02
ERC	9200	WATER PUMP ASSEMBLY	1E10
ERC	9220	SPECIAL NUT	1C12
ERC	9220	DOME NUT	1E12
ERC	9240	STUD	1G03
ERC	9278	PLATE ROCKER SHAFT	1C06
ERC	9335	CONNECTING HOSE	1N03
ERC	9359	CYLINDER HEAD	1E11
ERC	9410	PLUG-DRAIN WATER	1C02
ERC	9410	PLUG	1E02
ERC	9432	ADAPTOR	1E11
ERC	9446	COVER ASSEMBLY	1C07
ERC	9446	FRONT COVER	1E08
ERC	9448	PLUG	1C11
ERC	9448	PLUG	1E11
ERC	9469	TUBE-E.G.R.VALVE	1C14
ERC	9543	CAMSHAFT	1C05
ERC	9615	LEADS-DISTRIBUTOR-HIGH TENSION	2E06
ERC	9727	COVER	1E09

PART NUMBER		DESCRIPTION	REF.NO.
ERC	9728	HOSE-BREATHER	1E12
ERC	9738	EXHAUST VALVE	1E06
ERC	9739	INLET VALVE	1E06
ERC	9787	STUD	1E08
ETC	4066	VALVE-EXHAUST	1C06
ETC	4067	VALVE-INLET	1C06
ETC	4068	VALVE-SPRING CAP	1C06
ETC	4068	RETAINER-VALVE COLLET	1E06
ETC	4069	SPLIT CONE	1C06
ETC	4069	VALVE COLLET	1E06
ETC	4115	SUCTION PIPE	1M04
ETC	4140	WASHER	1C05
ETC	4140	PLATE-RETAINING CAMSHAFT	1E05
ETC	4141	BOLT	1C05
ETC	4141	BOLT	1E05
ETC	4146	HOSE-BREATHER	1E12
ETC	4246	SPECIAL SET BOLT	1C06
ETC	4246	BOLT SPECIAL	1E06
ETC	4301	CYLINDER HEAD	1E11
ETC	4357	MOUNTING BRACKET	2E11
ETC	4357	BRACKET-ALTERNATOR	2E15
ETC	4460	SCREW	1C06
ETC	4460	BOLT-SPECIAL	1E06
ETC	4464	PUMP BODY	1C04
ETC	4464	BODY-OIL PUMP	1E04
ETC	4466	ADAPTOR	2E03
ETC	4498	BOLT-BANJO	1C11
ETC	4498	BOLT-BANJO	1E11
ETC	4499	TIMING CHAIN	1E05
ETC	4666	PISTON ASSY	1E03
ETC	4667	PISTON ASSY	1E03
ETC	4709	SEALING RING	1C11
ETC	4709	'O'RING-VALVE GUIDE	1E11
ETC	4749	PISTON ASSY	1E03
ETC	4751	SEAL ASSEMBLY	1C11
ETC	4751	'O'RING-VALVE GUIDE	1E11
ETC	4763	THERMOSTAT	1F07
ETC	4765	THERMOSTAT	1F07
ETC	4953	FILTER-ENGINE OIL	1F05
ETC	5057	TAPPET	1C06
ETC	5057	TAPPET	1E06
ETC	5155	CONNECTING ROD NUT	1C03
ETC	5155	BOLT-CONNECTING ROD	1E03
ETC	5156	CON ROD ASSY	1E03
ETC	5157	CONNECTING ROD ASSEMBLY	1C03

PART	NUMBER		DESCRIPTION	REF.NO.
ETC	5178		FLYWHEEL HOUSING	1G03
ETC	5276		WASHER JOINT	1C12
ETC	5276		JOINT WASHER	1D13
ETC	5276		WASHER JOINT	1E12
ETC	5297		BREATHER-FILTER	1E12
ETC	5301		CYLINDER HEAD GASKET	1E11
ETC	5312		MANIFOLD GASKET	1E13
ETC	5369		OIL SEAL	1C03
ETC	5369		SEAL-OIL-REAR MAIN BEARING	1E03
ETC	5780		FLYWHEEL ASSEMBLY	1G03
ETC	5816		BRACKET ENGINE LIFTING	1C11
ETC	5816		BRACKET-ENGINE LIFTING	1E11
ETC	5927		FLYWHEEL HOUSING	1G02
ETC	5932		FLYWHEEL HOUSING	1G03
ETC	6137		THRUST WASHER	1C04
ETC	6138		LOCKNUT	1C04
ETC	6139		GEAR-DISTRIBUTOR DRIVE	1C04
ETC	6139		GEAR-DISTRIBUTOR DRIVE	1E04
ETC	9188		PISTON LINER	1C03
FAM	3162		BRAKE HOSE FRONT	1L09
FAM	3162		BRAKE HOSE	1L12
FAM	3658	L	NUT	1L10
FAM	3658	L	NUT	1L11
FAM	3658	L	NUT	1L13
FAM	8881	L	SWITCH	1O14
FRC	167		PIPE-OIL-GEARBOX	1I05
FRC	168		PIPE-OIL-GEARBOX	1I05
FRC	1034		WASHER-REVERSE IDLER GEAR	1H05
FRC	1035		CIRCLIP-REVERSE IDLER GEAR	1H05
FRC	1185		GEAR-3RD SPEED	1I06
FRC	1193		SHIM	1J07
FRC	1195		SHIM	1J07
FRC	1197		SHIM	1J07
FRC	1199		SHIM	1J07
FRC	1201		SHIM	1J07
FRC	1203		SHIM	1J07
FRC	1336		BLOCK	1I06
FRC	1337		BLOCK	1I06
FRC	1339		PRIMARY PINION	1I06
FRC	1343		GEAR-2ND SPEED	1I06
FRC	1344		GEAR-1ST SPEED MAIN SHAFT	1I06
FRC	1387		O RING FOR GEAR LEVER	1H11
FRC	1511		JOINT WASHER-OIL SEAL RETAINER	1H10
FRC	1516		JOINT WASHER	1H09
FRC	1536		SPEEDOMETER PINION	1H08

PART NUMBER			DESCRIPTION	REF.NO.
FRC	1644		HALF SHAFT	1J13
FRC	1645		HALF SHAFT	1J13
FRC	1691		LAYSHAFT CLUSTER	1H05
FRC	1691		LAYSHAFT CLUSTER	1H06
FRC	1743		SHAFT-REVERSE GEAR	1I09
FRC	1758		SYNCRO CLUTCH	1H04
FRC	1778		CASING-GEARBOX	1I04
FRC	1780		SEAL	1H08
FRC	1780		SEAL-OIL	1H10
FRC	1810		REVERSE IDLER GEAR ASSEMBLY	1H05
FRC	1812		NEEDLE ROLLER BEARING	1H05
FRC	1813		REVERSE GEAR SHAFT	1H05
FRC	1815		REVERSE SELECTOR FORK	1H11
FRC	1893		REVERSE IDLER GEAR ASSEMBLY	1H06
FRC	1921		PROPELLER SHAFT	1J14
FRC	1930		BEARING-SWIVEL PIN	1J06
FRC	1931		HOUSING-SWIVEL PIN	1J05
FRC	1938		LEVER-RH STEERING-RHD	1J06
FRC	1939		LEVER-LH STEERING-RHD	1J06
FRC	1940		LEVER-RH STEERING-LHD	1J06
FRC	1941		LEVER-LH STEERING-LHD	1J06
FRC	1942		SWIVEL PIN UPPER	1J06
FRC	1956		HOUSING-RH-SWIVEL PIN	1J06
FRC	1957		HOUSING-LH-SWIVEL PIN	1J06
FRC	1962	N	GEARBOX ASSEMBLY-NEW	1I02
FRC	1962	R	GEARBOX ASSEMBLY-REBUILT	1I02
FRC	1977		SHIM	1J11
FRC	1978		SHIM	1J11
FRC	1979		SHIM	1J11
FRC	1980		SHIM	1J11
FRC	1981		SHIM	1J11
FRC	1982		SHIM	1J11
FRC	1983		SHIM	1J11
FRC	1984		SHIM	1J11
FRC	1985		SHIM	1J11
FRC	1986		SHIM	1J11
FRC	1987		SHIM	1J11
FRC	1988		SHIM	1J11
FRC	1989		SHIM	1J11
FRC	1990		SHIM	1J11
FRC	1996		SLEEVE-HUB BEARING	1J13
FRC	2000	R	GEARBOX ASSEMBLY REBUILT	1H02
FRC	2001	N	GEARBOX ASSEMBLY NEW	1H02
FRC	2001	R	GEARBOX ASSEMBLY REBUILT	1H02
FRC	2002	N	GEARBOX ASSEMBLY NEW	1H02

PART NUMBER			DESCRIPTION	REF.NO.
FRC	2003	N	GEARBOX ASSEMBLY NEW	1H02
FRC	2007		THRUST WASHER-REVERSE IDLER GEAR	1H05
FRC	2008		SPACER-REVERSE IDLER SHAFT	1H05
FRC	2046		GEAR LEVER RH STG 4 CYLINDER	1H11
FRC	2047		GEAR LEVER LH STG 4 CYLINDER	1H11
FRC	2053		SELECTOR SHAFT	1H11
FRC	2055		BRACKET	1H11
FRC	2056		GEAR 1ST SPEED MAINSHAFT	1H04
FRC	2074		HOUSING ASSY-SWIVEL PIN RH	1J06
FRC	2075		HOUSING ASSY-SWIVEL PIN LH	1J06
FRC	2080		SWIVEL PIN & STG LEVER RH	1J06
FRC	2081		SWIVEL PIN & STG LEVER LH	1J06
FRC	2082		SWIVEL PIN & STG LEVER RH	1J06
FRC	2083		SWIVEL PIN & STG LEVER LH	1J06
FRC	2084		LAYSHAFT CLUSTER	1H05
FRC	2137		REAR AXLE ASSEMBLY	1J12
FRC	2175		PROPELLOR SHAFT ASSY	1J04
FRC	2186		SHAFT-FRONT OUTPUT	1I10
FRC	2216		HOUSING-DIFFERENTIAL	1J07
FRC	2240		GEAR-HIGH RANGE	1I09
FRC	2241		GEAR-HIGH RANGE	1I10
FRC	2256		FLANGE-OUTPUT SHAFT	1I10
FRC	2257		COVER-FRONT-GEARBOX	1I05
FRC	2258		BRACKET	1I10
FRC	2273		PIPE-VACUUM CONTROL	1I13
FRC	2274		PIPE-VACUUM CONTROL	1I13
FRC	2275		PIPE-VACUUM CONTROL	1I13
FRC	2283		SPEEDO WORM	1I11
FRC	2284		PINION-SPEEDOMETER DRIVE	1I11
FRC	2297		CLUTCH PLATE	1G02
FRC	2297		CLUTCH PLATE	1G03
FRC	2402		PLATE-CLUTCH CYLINDER	1G05
FRC	2469		LOCKER	1H11
FRC	2552		RETAINER-OIL SEAL-AXLE SHAFT	1J05
FRC	2673		2ND SPEED GEAR	1H04
FRC	2716		EXTENSION-GEAR CHANGE LEVER	1I12
FRC	2717		EXTENSION-GEAR CHANGE LEVER	1I12
FRC	2718		LEVER-GEAR CHANGE RH	1I12
FRC	2719		LEVER-GEAR CHANGE LH	1I12
FRC	2858		HOUSING-BELL	1I02
FRC	2859		COVER-BELL HOUSING	1I03
FRC	2863		SELECTOR	1I12
FRC	2872		GROMMET-RUBBER-TRANSMISSION	1L05
FRC	2928		BUSH-STUB AXLE	1J06
FRC	2930		HALFSHAFT-FRONT AXLE	1J05

PART NUMBER		DESCRIPTION	REF.NO.
FRC	2931	HALFSHAFT-FRONT AXLE	1J05
FRC	2933	DIFFERENTIAL CASE	1J08
FRC	2963	GEAR-INPUT	1I09
FRC	3099	SEAL-OIL-STUB AXLE	1J06
FRC	3100	STUB AXLE	1J06
FRC	3127	OIL CATCHER	1L03
FRC	3127	OIL CATCHER	1L04
FRC	3201	GEAR-1ST SPEED MAINSHAFT	1H04
FRC	3234	SPRING-BRAKE SHOE	1L05
FRC	3264	SHIM	1H09
FRC	3267	SHIM	1H09
FRC	3268	SHIM	1H09
FRC	3355	BAFFLE-TRANSFER BOX	1I05
FRC	3366	FRONT AXLE CASING	1J02
FRC	3366	FRONT AXLE CASE	1J03
FRC	3367	REAR AXLE CASING	1J12
FRC	3370	CASING-FRONT AXLE	1J02
FRC	3396	FRONT AXLE ASSEMBLY RH STG	1J02
FRC	3397	FRONT AXLE ASSEMBLY LH STG	1J02
FRC	3398	FRONT AXLE ASSEMBLY RH STG	1J03
FRC	3398	FRONT AXLE ASSEMBLY RH STG	1J03
FRC	3399	FRONT AXLE ASSEMBLY LH STG	1J03
FRC	3399	FRONT AXLE ASSEMBLY LH STG	1J03
FRC	3500	WASHER-THRUST	1I09
FRC	3507	SHAFT-INTERIM GEARS	1I09
FRC	3508	COVER-TOP	1I05
FRC	3517	BUSH-RR MAIN BEARING HOUSING	1I04
FRC	3517	HOUSING-ROLLER BEARING	1I06
FRC	3518	HOUSING REAR MAIN BEARING	1I04
FRC	3530	GEAR LEVER RH STG 6 CYLINDER	1H11
FRC	3531	GEAR LEVER LH STG 6 CYLINDER	1H11
FRC	3642	SHIM	1I09
FRC	3643	SHIM	1I09
FRC	3644	SHIM	1I09
FRC	3645	SHIM	1I09
FRC	3646	SHIM	1I09
FRC	3647	SHIM	1I09
FRC	3648	SHIM	1I09
FRC	3649	SHIM	1I09
FRC	3650	SHIM	1I09
FRC	3651	SHIM	1I09
FRC	3652	SHIM	1I09
FRC	3653	SHIM	1I09
FRC	3654	SHIM	1I09
FRC	3655	SHIM	1I09

PART NUMBER		DESCRIPTION	REF.NO.
FRC	3656	SHIM	1I09
FRC	3657	SHIM	1I09
FRC	3658	SHIM	1I09
FRC	3659	SHIM	1I09
FRC	3660	SHIM	1I09
FRC	3702	LOCKER	1H11
FRC	3776	GASKET-COVERPLATE	1H03
FRC	3875	HUB-FRONT	1J10
FRC	3875	FRONT HUB	1J11
FRC	3875	HUB REAR	1J13
FRC	3906	HALFSHAFT COMPLETE RH	1J05
FRC	3907	HALFSHAFT COMPLETE LH	1J05
FRC	3917	STUB AXLE	1J06
FRC	3924	STUB AXLE	1J13
FRC	3925	STUB AXLE	1J06
FRC	3942	LEVER-MAIN GEARBOX-RH STG	1I13
FRC	3943	LEVER-MAIN GEARBOX-LH STG	1I13
FRC	3947	HINGE	1H11
FRC	3991	HUB CAP	1J10
FRC	4007	COVER PLATE	1H03
FRC	4076	BUSH	1H04
FRC	4077	BUSH	1H04
FRC	4377	HUB CAP	1J11
FRC	4377	HUB CAP	1J13
FRC	4396	FRONT AXLE ASSEMBLY RH STG	1J02
FRC	4397	FRONT AXLE ASSEMBLY LH STG	1J02
FRC	4398	REAR AXLE ASSEMBLY	1J12
FRC	4406	AXLE-FRONT ASSEMBLY	1J02
FRC	4407	AXLE-FRONT ASSEMBLY	1J02
FRC	4408	AXLE-REAR ASSY	1J12
FRC	4572	SHAFT-SELECTOR	1I12
FRC	4586	OIL SEAL	1J07
FRC	4622	DIFFERENTIAL CASE	1J08
FRC	4808	JOINT WASHER	1I04
FRC	4809	SEALING WASHER	1H03
FRC	4809	JOINT WASHER	1H09
FRC	4810	JOINT WASHER	1I04
FRC	4810	JOINT WASHER	1I04
FRC	4835	WASHER-JOINT	1I04
FRC	4835	JOINT WASHER	1I05
FRC	4907	PROP SHAFT REAR 88	1J14
FRC	5091	KNOB-MAIN GEAR LEVER ASSY	1I13
FRC	5115	BEARING HOUSING	1H04
FRC	5116	OIL THROWER	1H04
FRC	5204	LOCKING RING	1J07

PART NUMBER		DESCRIPTION	REF.NO.
FRC	5318	SELECTOR FORK	1I12
FRC	5567	CASING ASSEMBLY	1H09
FRC	5597	SHAFT-SELECTOR	1I12
FRC	5598	SELECTOR	1I12
FRC	5600	SELECTOR FORK	1I12
FRC	5618	SHAFT-SELECTOR	1I12
FRC	5620	RETAINER-OIL SEAL-AXLE SHAFT	1J05
FRC	5629	COVER-TOP-GEARBOX	1I04
FRC	5648	SELECTOR	1I12
FRC	5661	LOCK TAB	1J07
FRC	5674	SHIM	1I10
FRC	5688	DIFFERENTIAL ASSEMBLY	1J07
FRC	5690	HOUSING-DIFFERENTIAL	1J07
FRC	5801	STUD	1I04
FRC	5882	SHAFT-GEAR SELECTOR	1I12
FRC	5897	SELECTOR SHAFT	1H11
FRC	5931	CONE-SYNCHROME	1I06
FRC	5931	CONE-SYNCHROME	1I06
FRC	6126	KNOB-TRANSFER GR LEVER ASSY	1I12
FRC	6284	THRUST WASHER	1I09
FRC	6285	THRUST WASHER	1I09
FRC	6286	THRUST WASHER	1I09
FRC	6287	THRUST WASHER	1I09
FRC	6288	THRUST WASHER	1I09
FRC	6461	WASHER PLAIN	1H08
FRC	6461	WASHER-PLAIN	1H10
FRC	6468	SEAL	1H11
FRC	6468	SEAL-OIL	1I12
FRC	6631	PLATE-CLUTCH	1G03
FRC	6738	PLATE	1H09
FRC	6938	WASHER	1H11
FRC	6956	THRUST WASHER	1I11
FRC	6958	THRUST WASHER	1I11
FRC	6960	THRUST WASHER	1I11
FRC	6962	THRUST WASHER	1I11
FRC	6964	THRUST WASHER	1I11
FRC	6968	THRUST WASHER	1I11
FRC	6996	SYNCHRO CLUTCH	1H04
FRC	6998	TRANSFER GEAR CHANGE LEVER	1H13
FRC	7007	JOINT WASHER	1H09
FRC	7013	HUB-DRIVING MEMBER	1J10
FRC	7013	HUB-DRIVING MEMBER	1J11
FRC	7013	HUB-DRIVING MEMBER	1J13
FRC	7104	GASKET-BOTTOM COVER TRANSFER CASING	1I04
FRC	7148	BOTTOM COVER	1H09

PART NUMBER			DESCRIPTION	REF.NO.
FRC	7298		AXLE-REAR ASSY	1J12
FRC	7740		DIFFERENTIAL ASSEMBLY	1I11
FRC	7745		OIL RETAINING RING	1I11
FRC	7778		DIFFERENTIAL ASSEMBLY	1J07
FRC	7871		BEARING-ROLLER	1I10
FRC	7967		GEARBOX CASING	1H03
FRC	8179		3RD SPEED GEAR	1H04
8G	8600	L	CLUTCH SLAVE CYLINDER	1G05
8G	8600	L	OVERHAUL KIT	2L07
8G	8837	L	KIT-CLUTCH MASTER CYLINDER	1G04
8G	8837	L	KIT-BRAKE MASTER CYLINDER	1L07
8G	8837	L	KIT,BRAKE MASTER CYLINDER	1L07
8G	8837	L	OVERHAUL KIT	2L07
8G	8845	L	OVERHAUL KIT FOR FUEL PUMP	1N10
8G	8845	L	OVERHAUL KIT FOR FUEL PUMP	2L07
18G	8246	L	KIT FUEL PUMP OVERHAUL	1N06
18G	8246	L	OVERHAUL KIT FOR FUEL PUMP	2L07
18G	8619	L	DRIVE END BEARING KIT	2E10
18G	8619	L	BEARING KIT-DRIVE END-	2E12
18G	8619	L	BEARING KIT-ALTERNATOR-DRIVE END	2E14
18G	8619	L	BEARING KIT-DRIVE END-	2E16
18G	8620	L	BEARING KIT FOR SLIP RING END	2E10
18G	8620	L	BEARING KIT-SLIP RING END-	2E12
18G	8620	L	BEARING KIT-SLIP RING END-ALTERNATOR	2E14
18G	8620	L	BEARING KIT-SLIP RING END-	2E16
18G	8951	L	KIT-BRAKE SERVO OVERHAUL	1L07
18G	8951	L	REPAIR KIT,SERVO	1L08
18G	8951	L	BRAKE SERVO MINOR REPAIR KIT	2L13
18G	8953	L	ADAPTOR-SERVO	1L07
22G	1941		BREATHER-COVER PLATE	1H03
24G	1345	L	BARREL LOCK	2F09

PART NUMBER			DESCRIPTION	REF.NO.
1H	9077	L	SWITCH-HEATER AND LAMPS	2F09
3H	822	L	GROMMET	2H09
3H	822	L	GROMMET	2H13
7H	5007		SPRING-BENDIX STARTER MOTOR	2E07
7H	5007		SPRING-BENDIX STARTER	2E08
12H	220	L	JOINT WASHER	1N10
13H	1515	L	BOLT-BANJO	1N10
13H	3735	L	STOP LIGHT SWITCH	1L06
13H	5952	L	SOLENOID-STARTER	2F12
13H	8702	L	PIPE CLIP	2D04
13H	8953	L	PIPE CLIP	1L11
13H	8953	L	PIPE CLIP	1L13
13H	9205	L	TRIP RESET CABLE	2F08
17H	2475	L	KEY-IGNITION	2F09
17H	7971	L	RETAINER-BRAKE SHOE SPRING	1L05
27H	1330	L	GASKET-FUEL PUMP BOWL	1N06
27H	5932	L	SPRING SET FOR STARTER MOTOR	2E09
27H	6481	L	LAMP UNIT SEATING RIM	2F02
27H	7946		BLUE BRAKE GREASE-TUBE	2L07
27H	8207	L	HEADLAMP COMPLETE	2F02
37H	575	L	SEAL	1N10
37H	770	L	O RING	1N10
37H	2736	L	SHAFT AND GEAR FOR WIPER MOTOR	2F06
37H	3694	L	NUT-SPECIAL WIPER CABLE	2F06
37H	4702		BUSH-STARTER MOTOR	2E09
37H	5452	L	BULB HOLDER	2F04
37H	6109	L	LENS FOR STOP TAIL LAMP	2F03
37H	6111	L	LENS FOR FLASHER LAMP	2F04
37H	6134	L	ADJUSTER UNIT ASSY	1L05
37H	7618	L	SEALING RING KIT FOR STARTER MOTOR	2E09
37H	7841	L	REGULATOR BOX-ALTERNATOR	2E10
37H	7841	L	REGULATOR BOX-ALTERNATOR	2E12
37H	7841	L	REGULATOR BOX-ALTERNATOR	2E14
37H	7920		DRAIN PLUG	1N10
37H	8119	L	SPECIAL BOLT	1N10
37H	8531	L	BRKT FOR STARTER COMMUTATOR END	2E09

PART NUMBER			DESCRIPTION	REF.NO.
HN	2005	L	NUT	1F10
HN	2005	L	NUT	1L07
HN	2005	L	NUT	1L11
HN	2005	L	NUT	1L13
HN	2005	L	NUT	1M12
HN	2005	L	NUT	1N13
HN	2005	L	NUT	1N13
HN	2005	L	NUT	1N17
HN	2005	L	NUT	1O10
HN	2005	L	NUT	1O12
HN	2005	L	NUT	1O14
HN	2005	L	NUT	2C09
HN	2005	L	NUT	2D02
HN	2005	L	NUT	2D04
HN	2005	L	NUT	2F02
HN	2005	L	NUT	2F04
HN	2005	L	NUT	2F12
HN	2005	L	NUT	2F13
HN	2005	L	NUT	2F14
HN	2005	L	NUT	2F15
HN	2005	L	NUT	2G09
HN	2005	L	NUT	2H06
HN	2005	L	NUT	2H14
HN	2005	L	NUT	2I03
HN	2005	L	NUT	2J02
HN	2005	L	NUT	2J03
HN	2005	L	NUT	2J05
HN	2005	L	NUT	2J06
HN	2005	L	NUT	2L12
HN	2005	L	NUT	2L13
HN	2005	L	NUT	2L15
HZA	5413	L	LOCK ASSY	2K05
HZA	5413	L	LOCK ASSEMBLY	2L05
JS	370	L	COVER FOR STARTER COMMUTATOR END	2E09
JS	487	L	DRIVE END BRACKET-ALTERNATOR	2E10
JS	487	L	BRACKET-DRIVE END-ALTERNATOR	2E12
JS	487	L	BRKT-DRIVE END-ALTERNATOR	2E14
JS	495	L	SUNDRY PARTS KIT-ALTERNATOR	2E10
JS	495	L	BEARING KIT-ALTERNATOR	2E12
JS	495	L	KIT-SUNDRY PARTS-ALTERNATOR	2E14
JS	495	L	KIT-SUNDRY PARTS-ALTERNATOR	2E16
JS	499	L	DIAPHRAGM FOR CARBURETTER	1M05
JS	499	L	DIAPHRAGM-AIR VALVE	1M10
JS	499	L	DIAPHRAGM	2L17
JS	657	L	CENTRE SEAL UPPER	1N09

PART NUMBER			DESCRIPTION	REF.NO.
JS	660	L	ELEMENT & SEAL FOR FILTER	1N09
53K	2852	L	WING NUT	1N05
MR	106300		CAPTIVE NUT	2H12
MRC	305		FRONT PLATE UPPER CRASH	2G09
MRC	306		FRONT PLATE UPPER CRASH	2G09
MRC	1149		BACKING PLATE	2G09
MRC	1151		SEAL RH STG	2G09
MRC	1152		SEAL LH STG	2G09
MRC	1201		STRAP FOR CENTRE SEAT	2K02
MRC	1210		U BOLT FOR SPARE WHEEL CARRIER	2H16
MRC	1210		'U' BOLT	2I02
MRC	1232		WAIST MOULDING REAR SIDE	2G17
MRC	1233		WAIST MOULDING REAR SIDE	2G17
MRC	1300		PLUG	2G09
MRC	1300		PLUG-PLASTIC	2L09
MRC	1765		INTERIOR SUN VISOR	2J05
MRC	1978		NYLON WASHER	2J02
MRC	1979		NYLON WASHER	2I03
MRC	1980		NYLON WASHER	2G16
MRC	1980		WASHER-DOOR HINGES	2G18
MRC	1980		WASHER-DOOR HINGES	2H16
MRC	1980		WASHER	2I02
MRC	2164		PROTECTIVE COVER-GRAB RAIL	2K03
MRC	2178		CAPTIVE NUT	2G16
MRC	2237		BRACKET & ANTILUCE COTTER ASSY-¢RH	2H03
MRC	2237		BRACKET RH-TAILBOARD RETAINER	2H06
MRC	2238		BRACKET & ANTILUCE COTTER ASSY-¢LH	2H03
MRC	2238		BRACKET LH-TAILBOARD RETAINER	2H06
MRC	2244		COVER PANEL RH REAR LAMPS	2H02
MRC	2244		PANEL RH-REAR LAMP COVER	2H05
MRC	2244		PANEL ¢RH-STOPTAIL LAMP COVER-	2H07
MRC	2245		COVER PANEL LH REAR LAMPS	2H02
MRC	2245		PANEL LH-REAR LAMP COVER	2H05
MRC	2245		PANEL ¢RH-STOPTAIL LAMP COVER-	2H07
MRC	2363		SEAL RETAINER RH	2H17
MRC	2364		SEAL RETAINER LH	2H17
MRC	2381		SEAL RETAINER RH	2G17
MRC	2382		SEAL RETAINER LH	2G17
MRC	2416		WINDSCREEN CLAMP ASSEMBLY	2G10
MRC	2440		BONNET COMPLETE	2G06
MRC	2479		BONNET COMPLETE	2G06
MRC	2481		BOLT PLATE	2G13
MRC	2595		FRT WING TOP/VALANCE ASSY-LH	2G07
MRC	2660		DRIVE SCREW	2G15
MRC	2660		SCREW	2G18

PART NUMBER		DESCRIPTION	REF.NO.
MRC	2660	DRIVE SCREW	2H18
MRC	2744	FRT WING TOP/VALANCE ASSY-LH	2G07
MRC	2762	SCREW	2G16
MRC	2762	SCREW	2G18
MRC	2797	SIDE STIFFENER WHEELARCH BOX	2L15
MRC	2868	STEERING COLUMN SHROUD SEAL	1O14
MRC	3037	DOOR HINGE UPPER RH	2I03
MRC	3038	DOOR HINGE UPPER LH	2I03
MRC	3045	SCREW 0.250 UNF X 0.500 ¢LONG	2F07
MRC	3047	SCREW	2J02
MRC	3051	WASHER-PLAIN	2J02
MRC	3052	WASHER-PLAIN	2G09
MRC	3053	DRIVE SCREW	2J02
MRC	3054	DRIVE SCREW	2J02
MRC	3055	WASHER-PLAIN	2J02
MRC	3056	DRIVE SCREW	2G09
MRC	3056	DRIVE SCREW	2G12
MRC	3058	WASHER	2F07
MRC	3084	RUBBER-WING VALANCE-ANTI NOISE	2I04
MRC	3085	RUBBER-WING VALANCE-ANTI NOISE	2I04
MRC	3093	CORNER PROTECTOR	2H17
MRC	3117	FRONT SUPPORT LINK SQUAB	2K02
MRC	3117	FRONT SUPPORT LINK SQUAB	2K03
MRC	3179	CENTRE SEAT	2K02
MRC	3293	REAR LOWER VALANCE ASSY-LH	2G07
MRC	3556	PANEL-RADIATOR GRILLE	2G05
MRC	3574	PLATE-FRONT FLOOR RH	2G11
MRC	3575	PLATE-FRONT FLOOR LH	2G11
MRC	3592	FRONT MAT-RH	2J08
MRC	3593	FRONT MAT-LH	2J08
MRC	3598	MOTIF-FRONT GRILLE PANEL	2G05
MRC	3598	NAME PLATE LAND-ROVER	2H13
MRC	3609	SEAL-TUNNEL FRONT	2G11
MRC	3610	SEAL-TUNNEL REAR	2G11
MRC	3611	SEAL-TUNNEL SIDE	2G11
MRC	3613	SEAL-TRANSFER LEVER	2G11
MRC	3873	CRASH PADDING-UPPER DASH	2J02
MRC	4034	SEAT SQUAB	2J09
MRC	4037	SHIM-WING TO VALANCE	2G08
MRC	4135	BRIDGE PLATE	2G10
MRC	4165	SIDE PANEL-WARNING LIGHT	2L12
MRC	4237	STRIP-CLAMPING GRILLE PANEL	2G05
MRC	4238	STRIP-BONNET REST	2G05
MRC	4266	BRACKET-FIXING GRILLE MESH	2G05
MRC	4367	PAINT REMOVING SCREW	2G08

PART NUMBER		DESCRIPTION	REF.NO.
MRC	4411	FRONT PANEL	2G07
MRC	4412	FRONT PANEL	2G07
MRC	4426	AUXILIARY PANEL	2F13
MRC	4427	AUXILIARY PANEL	2F13
MRC	4447	COVER DASH CENTRE	2J04
MRC	4462	CLAMP-BATTERY	2G04
MRC	4516	AUXILIARY PANEL	2F13
MRC	4516	INNER SIDE PANEL	2L12
MRC	4517	AUXILIARY PANEL	2F13
MRC	4570	COVER-STEERING RELAY	2G08
MRC	4571	PLATE-WING VALANCE PANEL	2G08
MRC	4583	MIRROR ARM	2I03
MRC	4612	SIDE PANEL ASSY RH	2H15
MRC	4613	SIDE PANEL ASSY LH	2H15
MRC	4753	RETAINER RH-DOOR CHECK STRAP	2G18
MRC	4754	RETAINER LH-DOOR CHECK STRAP	2G18
MRC	4798	BOLT-SHOULDER	2K05
MRC	4846	STRENGTHENING PLATE	2H05
MRC	4857	SEAL-MAIN GEAR LEVER	2G11
MRC	4858	PLAIN WASHER 0.250/9 X 20 SWG	2F07
MRC	4859	DRIVE SCREW	2J03
MRC	4860	WASHER-PLAIN	2J02
MRC	4863	DRIVE SCREW	2J02
MRC	5016	STOP-BONNET BUFFER	2G06
MRC	5016	BUFFER	2J14
MRC	5243	CENTRE LOCKER LID	2G12
MRC	5244	CENTRE LOCKER LID	2G12
MRC	5355	TUNNEL-GEARBOX	2G11
MRC	5356	COVER-TRANSFER CASE TUNNEL	2G11
MRC	5357	GEARBOX DIAPHRAGM PANEL	2G11
MRC	5504	BRACKET	2G08
MRC	5505	BRACKET	2G08
MRC	5509	BOLT PLATE	2J09
MRC	5509	STUD PLATE	2J10
MRC	5509	STUD PLATE	2J11
MRC	5511	NUT PLATE	2G08
MRC	5513	HORN PROTECTOR PLATE	2G05
MRC	5515	CLIP	1K03
MRC	5517	NUT PLATE	2F06
MRC	5519	FIXING PLATE	2G07
MRC	5520	FIXING PLATE	2G07
MRC	5524	WASHER-PLAIN	2H15
MRC	5525	WASHER PLAIN	2C11
MRC	5525	WASHER-PLAIN	2D02
MRC	5525	PLAIN WASHER	2G06

PART NUMBER		DESCRIPTION	REF.NO.
MRC	5525	WASHER-PLAIN	2G08
MRC	5525	WASHER PLAIN	2G12
MRC	5525	WASHER-PLAIN	2G13
MRC	5525	WASHER PLAIN	2G15
MRC	5525	WASHER PLAIN	2H02
MRC	5525	WASHER-PLAIN	2H03
MRC	5525	WASHER PLAIN	2H06
MRC	5525	WASHER-PLAIN	2H08
MRC	5525	WASHER PLAIN	2H14
MRC	5525	WASHER PLAIN	2H15
MRC	5525	WASHER-PLAIN	2H17
MRC	5525	WASHER PLAIN	2I02
MRC	5525	WASHER PLAIN	2J09
MRC	5525	WASHER PLAIN	2J10
MRC	5525	WASHER PLAIN	2J11
MRC	5525	WASHER-PLAIN	2J13
MRC	5525	WASHER-PLAIN	2J14
MRC	5526	WASHER PLAIN	2G10
MRC	5526	WASHER-PLAIN	2H05
MRC	5526	WASHER-PLAIN	2H07
MRC	5526	WASHER PLAIN	2J10
MRC	5526	WASHER PLAIN	2J11
MRC	5526	WASHER PLAIN	2J13
MRC	5527	WASHER-PLAIN	2F09
MRC	5527	WASHER-PLAIN	2G05
MRC	5527	WASHER PLAIN	2G10
MRC	5527	PLAIN-WASHER	2G10
MRC	5527	WASHER PLAIN	2H02
MRC	5527	WASHER PLAIN	2H15
MRC	5528	WASHER PLAIN	2G13
MRC	5528	WASHER PLAIN	2H13
MRC	5528	WASHER-PLAIN	2I15
MRC	5528	WASHER PLAIN	2J16
MRC	5528	WASHER-PLAIN	2K07
MRC	5529	WASHER-PLAIN	2G07
MRC	5529	WASHER-PLAIN	2G08
MRC	5529	WASHER PLAIN	2I04
MRC	5568	CLIP	2F08
MRC	5568	BRACKET-RETAINER-UPPER	2G09
MRC	5589	BONNET LOCK	2G05
MRC	5640	RUBBER-BONNET SIDE-ANTI NOISE	2I04
MRC	5695	WASHER PLAIN	1K04
MRC	5695	WASHER PLAIN	2H02
MRC	5695	WASHER-PLAIN	2L14
MRC	5695	WASHER-PLAIN	2L16

PART NUMBER		DESCRIPTION	REF.NO.
MRC 5695		PLAIN WASHER MOUNTING	2L18
MRC 5695	L	WASHER-PLAIN	2L15
MRC 5698		GAITER HAND BRAKE	1L16
MRC 5740		SEAL FOR DOOR	2G13
MRC 5741		SEAL FOR DOOR	2G13
MRC 5932		BONNET ASSEMBLY	2G06
MRC 6001		FRONT WING TOP & VALANCE-LH	2G07
MRC 6006		STIFFENER-FRT WING VALANCE-RH	2G08
MRC 6007		STIFFENER-FRT WING VALANCE-LH	2G08
MRC 6074		BOLT	2G10
MRC 6080		DASH COMP ASSY 4CYL & 109V8	2G09
MRC 6080		DASH ASSY	2G10
MRC 6081		PANEL FRONT WING RH-RHD	2G08
MRC 6082		PANEL FRONT WING LH-RHD	2G08
MRC 6083		PANEL FRONT WING RH-LHD	2G08
MRC 6084		PANEL FRONT WING LH-LHD	2G08
MRC 6262		KEY BLANK	2G05
MRC 6270		BUFFER-BONNET	2G06
MRC 6270		RUBBER BUFFER	2G09
MRC 6493		GLASS	2H16
MRC 6499		SIDE LIGHT	2H17
MRC 6511		GLASS-FIXED-SIDE SCREEN	2G14
MRC 6512		GLASS-SLINDING-SIDE SCREEN	2G14
MRC 6530		WINDSCREEN GLASS LAMINATED	2G10
MRC 6532		STRIKER PIN	2G06
MRC 6620		GRILLE-RADIATOR	2G05
MRC 6908		PLATE CARB VENT PIPES	2G08
MRC 6963		CHANNEL-CROSS BRACES	2G05
MRC 6969		LID-LOCKER-SIDE RH	2G12
MRC 6977		CATCH-BONNET	2G06
MRC 6978		WASHER PLATE-BONNET CATCH	2G06
MRC 6980		CUSHION	2J13
MRC 6982		SQUAB	2J13
MRC 6985		SEAT CUSHION	2J13
MRC 6987		SEAT SQUAB	2J13
MRC 7000		FRONT WING TOP & VALANCE-RH	2G07
MRC 7044		COVER-GEARBOX TUNNEL	2G11
MRC 7044		COVER GEARBOX TUNNEL	2I04
MRC 7044		COVER GEARBOX TUNNEL	2J04
MRC 7116		BONNET PROP COMPLETE	2G06
MRC 7173		SEAT BASE ASSEMBLY	2G12
MRC 7174		SEAT BASE	2G12
MRC 7175		BASE-BATTERY	2G04
MRC 7175		BATTERY BASE	2G12
MRC 7217		DOOR-RH-REAR SIDE	2G17

PART NUMBER		DESCRIPTION	REF.NO.
MRC	7218	DOOR-LH-REAR SIDE	2G17
MRC	7233	GLASS	2H16
MRC	7234	GLASS-REAR DOOR STATION WAGON	2H18
MRC	7255	ROOF ASSEMBLY	2H17
MRC	7343	CUSHION	2J12
MRC	7353	FRONT SEAT SQUAB	2J13
MRC	7365	COVER-SPARE WHEEL 109"	2H16
MRC	7365	COVER SPARE WHEEL	2I02
MRC	7375	'J' BOLT	2G04
MRC	7376	ROOF ASSEMBLY	2H17
MRC	7425	BADGE"LAND ROVER V8"BODYSIDE	2H04
MRC	7425	BADGE'LAND ROVER V8'BODYSIDE	2H07
MRC	7493	CROSS BRACE-RH	2G05
MRC	7494	CROSS BRACE-LH	2G05
MRC	7495	FRONT WING STIFFENER-NOSE	2G08
MRC	7496	FRONT WING STIFFENER-NOSE	2G08
MRC	7537	BADGE-"V8" REAR END PANEL	2H06
MRC	7537	BADGE 'V8'REAR END PANEL	2H07
MRC	7542	BODYSIDE COMPLETE RH	2H04
MRC	7543	BODYSIDE COMPLETE LH	2H04
MRC	7547	REAR END PANEL LH	2H02
MRC	7547	REAR END PANEL LH	2H04
MRC	7547	REAR END PANEL LH	2H07
MRC	8094	PANEL PROTECTION SHIELD	2H06
MRC	8094	PANEL PROTECTION SHIELD	2H08
MRC	8100	BODYSIDE COMPLETE RH	2H02
MRC	8101	BODYSIDE COMPLETE LH	2H02
MRC	8130	BODYSIDE COMPLETE RH	2H07
MRC	8131	BODYSIDE COMPLETE LH	2H07
MRC	8135	LOCATING ANGLE	2G12
MRC	8172	LABEL	2F09
MRC	8276	MIRROR HEAD	2I03
MRC	8316	HEADLAMP BEZEL	2G07
MRC	8317	HEADLAMP BEZEL	2G07
MRC	8356	RUBBER-BONNET-ANTI NOISE	2I04
MRC	8388	OVER CENTRE CATCH	2G12
MRC	8524	MOUNTING BRACKET	2J16
MRC	8570	BRACKET	2I04
MRC	8666	PAD-BATTERY TRAY	2G04
MRC	8960	PANEL-RADIATOR GRILLE	2G05
MRC	9191	BONNET PROP	2G06
MRC	9244	BONNET HINGE	2G06
MRC	9397	RUBBER SEAL	2G17
MRC	9417	NUT RETAINER	2G15
MRC	9417	RETAINER-REAR DOOR LOCK	2H18

PART NUMBER		DESCRIPTION	REF.NO.
MRC	9451	CENTRE LOCKER LID	2G12
MRC	9477	SEAL	2G12
MRC	9481	FRONT SEAT SLIDE	2J10
MRC	9481	FRONT SEAT SLIDE	2J11
MRC	9481	FRONT SEAT SLIDE	2J13
MRC	9492	FRONT SEAT SLIDE	2J10
MRC	9492	FRONT SEAT SLIDE	2J11
MRC	9492	FRONT SEAT SLIDE	2J13
MRC	9493	FRONT SEAT SLIDE	2J10
MRC	9493	FRONT SEAT SLIDE	2J11
MRC	9493	FRONT SEAT SLIDE	2J13
MRC	9562	WINDSCREEN-COMPLETE	2G10
MRC	9586	GRILLE TOP PANEL	2G05
MRC	9678	DASH COMPLETE ASSY 6 CYL	2G09
MRC	9914	COVER PLATE	2H07
MRC	9915	COVER PLATE	2H07
MRC	9995	BONNET STRIKER	2G06
MTC	1002	CENTRE SEAT SQUAB	2K02
MTC	1003	CENTRE SEAT CUSHION	2K03
MTC	1039	MOUNTING ANGLE	2H04
MTC	1039	MOUNTING ANGLE-REAR BODY	2H07
MTC	1074	REAR FLOOR	2H07
MTC	1409	BULKHEAD PANEL	2H09
MTC	1416	CAPPING	2H12
MTC	1423	BRACKET ASSEMBLY	2H12
MTC	1439	HOOK LASHING	2H11
MTC	1439	LASHING HOOK	2H13
MTC	1448	GASKET-MOUNTING PLATE	2H11
MTC	1449	LADDER RACK	2H14
MTC	1454	WHEEL GUARD RH	2H14
MTC	1455	WHEEL GUARD LH	2H14
MTC	1461	COVER PANEL	2H12
MTC	1462	GASKET	2H12
MTC	1479	REAR CENTRE PILLAR	2H11
MTC	1481	REAR LOWER PILLAR RH	2H11
MTC	1482	REAR LOWER PILLAR LH	2H11
MTC	1485	SPACER	2H12
MTC	1490	RUBBING STRIP	2H12
MTC	1508	PANEL VALANCE FRONT	2H11
MTC	1509	PANEL VALANCE FRONT	2H11
MTC	1512	REINF FRONT VALANCE	2H11
MTC	1516	BRACKET	2H14
MTC	1531	BUFFER STOP	2H13
MTC	1579	TAP PLATE	2H09
MTC	1584	SPARE WHEEL MTG ASSY	2H12

PART NUMBER			DESCRIPTION	REF.NO.
MTC	1592		PLATE	2H12
MTC	1594		PLUG	2H10
MTC	1594		PLUG	2H11
MTC	1595		PAD BODY MTG	2H09
MTC	1606		SEAT BELT ASSY	2J16
MTC	1607		SEAT BELT ASSY	2J16
MTC	1610		SEAT BELT(AUDIBLE WARNING)RH	2I15
MTC	1614		SAFETY HARNESS RH	2I15
MTC	1615		SAFETY HARNESS LH	2I15
MTC	1827		CHAIN	2H03
MTC	1827		CHAIN-TAILBOARD	2H06
MTC	1902		STIFFENER-FRT WING VALANCE-LH	2G08
MTC	1903		STIFFENER-FRT WING VALANCE-RH	2G08
MTC	1904		FRONT PANEL-RH	2G07
MTC	1905		FRONT PANEL-LH	2G07
MTC	1908		FRONT WING TOP & VALANCE-RH	2G07
MTC	1909		FRONT WING TOP & VALANCE-LH	2G07
MTC	1918		CUSHION ASSY-BLACK AMBLA	2J14
MTC	1919		HEAD RESTRAINT-BLACK AMBLA	2J14
MTC	1920		SQUAB ASSY-BLACK AMBLA	2J14
MTC	1921		SQUAB ASSY-BLACK AMBLA	2J14
MTC	1922		CUSHION COVER-BLACK AMBLA	2J14
MTC	1923		SQUAB COVER-BLACK/AMBLA	2J14
MTC	1928	RD	CUSHION ASSY-BRUSHWOOD/BERBER	2J14
MTC	1928	RE	CUSHION ASSY-GREY/BLACK	2J14
MTC	1929	RD	HEAD RESTRAINT-BRUSHWOOD/BERBER	2J14
MTC	1929	RE	HEAD RESTRAINT-GREY/BLACK	2J14
MTC	1930	RD	SQUAB ASSY-BRUSHWOOD/BERBER	2J14
MTC	1930	RE	SQUAB ASSY-GREY/BLACK	2J14
MTC	1931	RD	SQUAB ASSY-BRUSHWOOD/BERBER	2J14
MTC	1931	RE	SQUAB ASSY-GREY/BLACK	2J14
MTC	1932	RD	CUSHION COVER-BRUSHWOOD/BERBER	2J14
MTC	1932	RE	CUSHION COVER-GREY/BLACK	2J14
MTC	1933	RD	SQUAB COVER-BRUSHWOOD/BERBER	2J14
MTC	1933	RE	SQUAB COVER-GREY/BLACK	2J14
MTC	1938		SUB FRAME C/W SLIDES	2J14
MTC	1940	AV	BACK PANEL-BRUSHWOOD	2J14
MTC	1940	PB	BACK PANEL-BLACK	2J14
MTC	1941		CUSHION ASSY-BLACK AMBLA	2J14
MTC	1942		SQUAB ASSY-BLACK AMBLA	2J14
MTC	1943		CUSHION COVER-BLACK AMBLA	2J14
MTC	1944		SQUAB COVER-BLACK AMBLA	2J14
MTC	1947	RD	CUSHION ASSY-BRUSHWOOD/BERBER	2J14
MTC	1947	RE	CUSHION ASSY-GREY/BLACK	2J14
MTC	1948	RD	SQUAB ASSY-BRUSHWOOD/BERBER	2J14

PART NUMBER			DESCRIPTION	REF.NO.
MTC	1948	RE	SQUAB ASSY-GREY/BLACK	2J14
MTC	1949	RD	CUSHION COVER-BRUSHWOOD/BERBER	2J14
MTC	1949	RE	CUSHION COVER-GREY/BLACK	2J14
MTC	1950	RD	SQUAB COVER-BRUSHWOOD/BERBER	2J14
MTC	1950	RE	SQUAB COVER-GREY/BLACK	2J14
MTC	1953	AV	BACK PANEL-BRUSHWOOD	2J14
MTC	1953	PB	BACK PANEL-BLACK	2J14
MTC	2134		PROTECTION ANGLE RH	2H03
MTC	2134		PROTECTION ANGLE RH	2H06
MTC	2134		PROTECTION ANGLE RH	2H08
MTC	2135		PROTECTION ANGLE LH	2H03
MTC	2135		PROTECTION ANGLE LH	2H06
MTC	2135		PROTECTION ANGLE LH	2H08
MTC	2238		REAR END PANEL RH	2H02
MTC	2238		REAR END PANEL RH	2H04
MTC	2238		REAR END PANEL RH	2H07
MTC	2568		HOOD STICK	2L04
MTC	2569		HOOD STICK	2L04
MTC	2574	AE	HOOD ASSY-PLAIN SIDES	2L04
MTC	2574	AG	HOOD ASSY-PLAIN SIDES	2L04
MTC	2575	AE	HOOD ASSY-SIDE WINDOWS	2L04
MTC	2575	AG	HOOD ASSY-SIDE WINDOWS	2L04
MTC	2657		CONSOLE UNIT	2K05
MTC	2657		CONSOLE UNIT	2L05
MTC	3118		SEAL-WINDOW CATCH	2G15
MTC	3118		SEAL-WINDOW CATCH	2G17
MTC	3126		BRACKET	2H10
MTC	3127		BRACKET	2H10
MTC	3140		EXTENTION BRACKET RH	2H14
MTC	3141		EXTENTION BRACKET LH	2H14
MTC	3165		COVER TOOLS	2L05
MTC	3166		PLATE RETAINING COVER	2L05
MTC	3180		FILLER(LOWER)	2G14
MTC	3181		FRONT SEAT SQUAB	2J13
MTC	3182		FRONT SEAT SQUAB	2J13
MTC	3183		SEAT SQUAB	2J09
MTC	3333		ASSY REINF PLATE CAB	2H11
MTC	3336		MAT FLOOR	2J05
MTC	3337		MAT FLOOR	2J05
MTC	3338		INSULATION	2J05
MTC	3350		PLATE-MOUNTING	2H11
MTC	3469		GLASS REAR DOOR	2H18
MTC	3474		ROOF SIDE LIGHT-SUNDYM	2H17
MTC	3476		GLASS	2H16
MTC	3481		BRACKET FRONT MTG.	2H10

PART NUMBER		DESCRIPTION	REF.NO.
MTC	3482	BRACKET FRONT MTG.	2H10
MTC	3486	BRACKET ANCHOR FRONT	2H10
MTC	3508	MUDSHIELD	2H03
MTC	3508	MUDSHIELD	2H06
MTC	3508	MUDSHIELD	2H08
MTC	3509	FIXING CHANNEL	2H03
MTC	3509	FIXING CHANNEL	2H06
MTC	3509	CHANNEL	2H08
MTC	3515	PLATE-MOUNTING	2H11
MTC	3521	REAR CROSSMEMBER	2H09
MTC	3527	PANEL VALANCE REAR	2H11
MTC	3528	PANEL VALANCE REAR	2H11
MTC	3533	PANEL-INNER BODYSIDE-RH	2H11
MTC	3534	PANEL-INNER BODYSIDE-LH	2H11
MTC	3539	FLOOR PANEL	2H09
MTC	3556	HINGE-TAILGATE	2H13
MTC	3557	TEE BOLT	2H13
MTC	3558	TEE BOLT	2H09
MTC	3569	FUEL FILLER COWL ASSEMBLY	2H12
MTC	3763	FRONT PORTION ROOF TRIM	2J06
MTC	3763	FRONT PORTION ROOF TRIM	2J07
MTC	3764	REAR HEAD LINING	2J07
MTC	3765	HEADCLOTH	2J07
MTC	3904	REAR BODY COMPLETE ASSY	2H09
MTC	3906	BODYSIDE	2H11
MTC	3907	BODYSIDE	2H11
MTC	3908	TAILGATE	2H13
MTC	3917	LATCH ASSEMBLY	2H13
MTC	3923	SEAL-TAILGATE	2H13
MTC	4002	BRACKET	2H09
MTC	4003	BRACKET	2H09
MTC	4039	TAP PLATE	2H09
MTC	4043	CROSSMEMBER	2H09
MTC	4054	RETAINING BAR	2L04
MTC	4056	HOOD STICK	2L04
MTC	4090	MOUNTING BRACKET	2J16
MTC	4111	DOOR SEAL	2H18
MTC	4112	DOOR SEAL RH	2G13
MTC	4113	DOOR SEAL LH	2G13
MTC	4114	DOOR SEAL RH	2G17
MTC	4115	DOOR SEAL LH	2G17
MTC	4117	WHEEL GUARD LH	2H14
MTC	4126	CANOPY TRIM PANEL	2J06
MTC	4126	CANOPY TRIM PANEL	2J07
MTC	4132	PAD ROOF LAMP	2J06

PART NUMBER			DESCRIPTION	REF.NO.
MTC	4132		PAD ROOF LAMP	2J07
MTC	4134		REAR HEAD LINING	2J06
MTC	4156		REINFORCING ANGLE	2H09
MTC	4164		SEAL RUBBER TAILBOARD RH	2H06
MTC	4165		SEAL RUBBER TAILBOARD LH	2H06
MTC	4187		PLATE	2K09
MTC	4188		CABLE TAILGATE RETAINING	2H13
MTC	4195		STRIKING PLATE	2G15
MTC	4195		STRIKER PLATE	2G18
MTC	4197		MOUNTING PLATE	2K05
MTC	4197		CENTRE LOCKER COVER	2L05
MTC	4290		RETAINER	2H18
MTC	4320		LABEL-'DIESEL FUEL'	2H12
MTC	4327		END PANEL	2H02
MTC	4327		PANEL RH-REAR BODY	2H04
MTC	4327		PANEL-REAR	2H07
MTC	4328		END PANEL	2H02
MTC	4328		PANEL LH-REAR BODY	2H04
MTC	4328		PANEL LH-REAR BODY	2H07
MTC	4387		PANEL	2K09
MTC	4391		INSULATION	2J05
MTC	4392		INSULATION	2J05
MTC	4460		BADGE 'LAND ROVER'	2H03
MTC	4460		BADGE 'LAND ROVER'	2H06
MTC	4460		BADGE 'LAND ROVER'	2H07
MTC	4460		LOGO	2H13
MTC	4472		BRACKET	2K09
MTC	4480		INSULATION	2J05
MTC	4483	RD	CUSHION-CENTRE FRONT SEAT	2K05
MTC	4483	RD	SEAT CUSHION ASSY	2K06
MTC	4483	RE	CUSHION CENTRE FRONT SEAT	2K05
MTC	4483	RE	SEAT CUSHION ASSEMBLY	2K06
MTC	4484	RD	SEAT BACKREST	2K06
MTC	4484	RE	SEAT BACKREST	2K06
MTC	4485	RD	CENTRE SEAT CUSHION	2K04
MTC	4485	RE	CENTRE SEAT CUSHION	2K04
MTC	4486	RD	SQUAB-CENTRE SEAT	2K03
MTC	4486	RE	SQUAB CENTRE SEAT	2K03
MTC	4487	RD	REAR SEAT CUSHION	2K07
MTC	4487	RE	REAR SEAT CUSHION	2K07
MTC	4488	RD	REAR SEAT SQUAB	2K07
MTC	4488	RE	REAR SEAT SQUAB	2K07
MTC	4489	RD	SQUAB ASSY-CENTRE FRONT SEAT	2K05
MTC	4489	RE	SQUAB ASSY CENTRE F/SEAT	2K05
MTC	4490	RD	REAR SEAT SQUAB	2K08

PART NUMBER			DESCRIPTION	REF.NO.
MTC	4490	RE	REAR SEAT SQUAB	2K08
MTC	4491	RD	REAR SEAT BACKREST ASSY	2K08
MTC	4491	RE	REAR SEAT BACKREST ASSEMBLY	2K08
MTC	4496		ROOF TRIM	2J06
MTC	4497		ROOF TRIM	2J07
MTC	4520		TRAY	2K05
MTC	4520		TRAY FOR CONSOLE UNIT	2L05
MTC	4525		NUT PLATE	2J14
MTC	4601		WASHER PLATE	2K05
MTC	4601		WASHER PLATE	2L05
MTC	4655		PAD-BONNET INSULATION	2I04
MTC	4657		BRACKET-BONNET INSULATION	2I04
MTC	4719		BADGE COUNTY	2K09
MTC	4720		TAPE	2K09
MTC	4824		BRACKET TAILGATE WIRE	2H13
MTC	4828		SEAL-CLAMPING STRIP	2G05
MTC	4829		SEAL-GRILLE PANEL	2G05
MTC	4844		CATCH-REAR PILLAR RH	2H13
MTC	4845		CATCH-REAR PILLAR LH	2H13
MTC	4846		PLATE	2H13
MTC	4876		TAPE	2K09
MTC	4888		PLATE	2H13
MTC	4942		BRACKET	2H14
MTC	4943		HOODSTICK	2L04
MTC	4944		HOODSTICK	2L04
MTC	4945		HOODSTICK	2L04
MTC	4946		LADDER RACK	2H14
MTC	4948		SEAL RETAINER RH	2G17
MTC	4949		SEAL RETAINER LH	2G17
MTC	5034		GLASS-REAR WINDOW	2H16
MTC	5038		REAR UPPER PILLAR RH	2H11
MTC	5039		REAR UPPER PILLAR LH	2H11
MTC	5171		BODY SIDE CAPPING	2H06
MTC	5172		CAPPING FOR BODY SIDE	2H06
MTC	5191		SEAL RETAINER-LH	2H17
MTC	5192		SEAL RETAINER-RH	2H17
MTC	5304		FIXED WINDOW	2G14
MTC	5305		SLIDING WINDOW	2G14
MTC	5306		FIXED WINDOW SUNDYM	2G14
MTC	5307		SLIDING WINDOW SUNDYM	2G14
MTC	5308		GLASS-REAR SIDE DOOR	2G17
MTC	5309		GLASS-REAR SIDE DOOR	2G17
MTC	5310		GLASS-FIXED SIDE SCREEN-REAR	2G17
MTC	5311		GLASS-SLIDING SIDE SCREEN-	2G17
MTC	5311		FILLER(LOWER)	2G17

PART NUMBER		DESCRIPTION	REF.NO.
MTC	5314	GLASS	2H16
MTC	5315	GLASS-SIDE WINDOW	2H16
MTC	5316	GLASS WINDSCREEN RH	2G10
MTC	5317	GLASS WINDSCREEN LH	2G10
MTC	5318	WINDSCREEN GLASS LAMINATED	2G10
MTC	5324	DOOR ASSEMLBY(109 V8)	2H18
MTC	5343	REAR BODY COMPLETE ASSEMBLY	2H04
MTC	5354	SIDE PANEL	2H07
MTC	5355	SIDE PANEL	2H07
MTC	5359	REAR BODY COMPLETE ASSY	2H07
MTC	5360	REAR BODY COMPLETE ASSY	2H02
MTC	5365	SIDE PANEL	2H02
MTC	5366	SIDE PANEL	2H02
MTC	5370	W/SCREEN COMPLETE TOUGHENED	2G10
MTC	5380	W/SCREEN COMPLETE LAMINATED	2G10
MTC	5382	FRONT DOOR SIDE SCREEN RH	2G14
MTC	5383	FRONT DOOR SIDE SCREEN LH	2G14
MTC	5384	SIDE SCREEN-RH-FRONT DOOR	2G14
MTC	5385	SIDE SCREEN-LH-FRONT DOOR	2G14
MTC	5386	REAR SIDE DOOR RH	2G17
MTC	5387	REAR SIDE DOOR LH	2G17
MTC	5388	DOOR RH-REAR SIDE	2G17
MTC	5389	DOOR LH-REAR SIDE	2G17
MTC	5394	CAPPING	2H15
MTC	5395	CAPPING	2H15
MTC	5422	SIDE PANEL ASSEMBLY-RH	2H15
MTC	5423	SIDE PANEL ASSEMBLY-LH	2H15
MTC	5447	WINDSCREEN COMPLETE	2G10
MTC	6014	LOCK RING	2K05
MTC	6014	LOCKING RING	2L05
MTC	6074	CAPPING TOP SIDE	2H08
MTC	6075	CAPPING TOP SIDE	2H08
MTC	6410	RETAINING PLATE	2H16
MTC	6410	RETAINING PLATE	2I02
MTC	6448	SEAT FRAME	2K07
MTC	6456	HANDLE	2J08
MTC	6466	HINGE	2K03
MTC	6466	HINGE	2K04
MTC	6467	HINGE	2K03
MTC	6467	HINGE	2K04
MTC	6754	SQUAB SUPPORT LINK RH	2K02
MTC	6754	SQUAB SUPPORT LINK RH	2K03
MTC	6755	SQUAB SUPPORT LINK LH	2K02
MTC	6755	SQUAB SUPPORT LINK LH	2K03
MTC	6792	LOCK SUPPORT BRACKET	2K04

PART NUMBER		DESCRIPTION	REF.NO.
MTC 6792		LOCK SUPPORT BRACKET	2K05
MTC 6801		SPRING	2K05
MTC 6802		ANCHOR PLATE	2K05
MTC 6902		FRAME AND PANEL ASSY	2H18
MTC 6959		SEAL DASH TO WINDSCREEN	2G10
MTC 6960		SEAL WINDSCREEN TO ROOF	2H17
MTC 7793		COVER-SPARE WHEEL 88"	2H16
MTC 7793		COVER SPARE WHEEL	2I02
MTC 7797		SEAT BELT(AUDIBLE WARNING)LH	2I15
MTC 8376		PAD	2H12
MTC 8984		SQUAB RETENTION COVER	2K05
MTC 8985		SQUAB RETENTION COVER	2K05
MTC 9424		SCREW	2K05
MTC 9908		CLINCHED DOOR ASSEMBLY	2H18
MTC 9917		CLINCHED DOOR ASSEMBLY	2H18
MTC 9956		LOCKING TRIM	2J14
MTC 9958		LOCKING TRIM	2J14
MTC 9959		LOCKING TRIM	2J14
MTC 9962		NAIL TRIM	2J14
MTC 9967		LOCKING TRIM	2J14
MUC 1324		NUT PLATE	2H15
MUC 1715		REFLECTOR	2F05
MUC 2364		'U'BOLT FOR SPARE WHEEL CARRIER	2H16
MUC 2364		'U' BOLT	2I02
MUC 2366		BOLT PLATE SPARE WHEEL CARRIER	2H16
MUC 2366		BOLT PLATE	2I02
MUC 2368		THREADED WASHER	2H16
MUC 2368		WASHER	2I02
MUC 2588		FRAME	2G17
MUC 2589		FRAME	2G17
MUC 2934		CLAMP PLATE	2H16
MUC 2934		CLAMP PLATE	2I02
NC 112041	L	CASTLE NUT 12 MM	1K06
NC 112041	L	NUT-CASTELLED	1K07
NC 112041	L	NUT	1K08
ND 604041	L	CASTLE NUT (0.25" UNF)	1D05
NH 104041	L	NUT	2H03
NH 104041	L	NUT	2H06
NH 105041	L	NUT	1013
NH 105041	L	NUT	1N10
NH 105041	L	NUT	2D04
NH 105041	L	NUT	2F05
NH 105041	L	NUT	2H17
NH 105041	L	NUT	2K07
NH 106041	L	NUT	1013

PART NUMBER		DESCRIPTION	REF.NO.
NH 106041	L	NUT	1F02
NH 106041	L	NUT	1G03
NH 106041	L	NUT	1G04
NH 106041	L	NUT	1I03
NH 106041	L	NUT	1I13
NH 106041	L	NUT	1K04
NH 106041	L	NUT	1L07
NH 106041	L	NUT	1L09
NH 106041	L	NUT	1L10
NH 106041	L	NUT	1L11
NH 106041	L	NUT	1L12
NH 106041	L	NUT	1L13
NH 106041	L	NUT	1L16
NH 106041	L	NUT	1N09
NH 106041	L	NUT	1N11
NH 106041	L	NUT	1N12
NH 106041	L	NUT	1N13
NH 106041	L	NUT	1O07
NH 106041	L	NUT	1O11
NH 106041	L	NUT	1O14
NH 106041	L	NUT	2C03
NH 106041	L	NUT	2C05
NH 106041	L	NUT	2C08
NH 106041	L	NUT	2C11
NH 106041	L	NUT	2D02
NH 106041	L	NUT	2D04
NH 106041	L	NUT	2F09
NH 106041	L	NUT	2F12
NH 106041	L	NUT	2G02
NH 106041	L	NUT	2G04
NH 106041	L	NUT	2G04
NH 106041	L	NUT	2G06
NH 106041	L	NUT	2G07
NH 106041	L	NUT	2G08
NH 106041	L	NUT	2G10
NH 106041	L	NUT	2G11
NH 106041	L	NUT	2G12
NH 106041	L	NUT	2G13
NH 106041	L	NUT	2G15
NH 106041	L	NUT	2H02
NH 106041	L	NUT	2H03
NH 106041	L	NUT	2H04
NH 106041	L	NUT	2H05
NH 106041	L	NUT	2H06
NH 106041	L	NUT	2H07

PART NUMBER		DESCRIPTION	REF.NO.
NH 106041	L	NUT	2H08
NH 106041	L	NUT	2H11
NH 106041	L	NUT	2H13
NH 106041	L	NUT	2H14
NH 106041	L	NUT	2H15
NH 106041	L	NUT	2H17
NH 106041	L	NUT	2I02
NH 106041	L	NUT	2I04
NH 106041	L	NUT	2I15
NH 106041	L	NUT	2J09
NH 106041	L	NUT	2J10
NH 106041	L	NUT	2J11
NH 106041	L	NUT	2J13
NH 106041	L	NUT	2J14
NH 106041	L	NUT	2J16
NH 106041	L	NUT	2K04
NH 106041	L	NUT	2K05
NH 106041	L	NUT	2K06
NH 106041	L	NUT	2K07
NH 106041	L	NUT	2L04
NH 106041	L	NUT	2L14
NH 106041	L	NUT	2L15
NH 106041	L	NUT	2L16
NH 106044		NUT	2K05
NH 106044		NUT	2K08
NH 106044	L	NUT	2K07
NH 108041	L	NUT	1C04
NH 108041	L	NUT	1C07
NH 108041	L	NUT	1C13
NH 108041	L	NUT	1E05
NH 108041	L	NUT	1E07
NH 108041	L	NUT	1E08
NH 108041	L	NUT	1E13
NH 108041	L	NUT	1I03
NH 108041	L	NUT	1I05
NH 108041	L	NUT	1L16
NH 108041	L	NUT	1N10
NH 108041	L	NUT	1O07
NH 108041	L	NUT	1O11
NH 108041	L	NUT	2C03
NH 108041	L	NUT	2C05
NH 108041	L	NUT	2C06
NH 108041	L	NUT	2C08
NH 108041	L	NUT	2C11
NH 108041	L	NUT	2E16

PART NUMBER		DESCRIPTION	REF.NO.
NH 108041	L	NUT	2G05
NH 108041	L	NUT	2G18
NH 108041	L	NUT	2H09
NH 108041	L	NUT	2H09
NH 108041	L	NUT	2H10
NH 108041	L	NUT	2H13
NH 108041	L	NUT	2I15
NH 108041	L	NUT	2J16
NH 108041	L	NUT 8 MM	2L13
NH 108044		NUT	2K03
NH 108044		NUT	2K04
NH 110041	L	NUT 10 MM	1C14
NH 110041	L	NUT	1D15
NH 110041	L	NUT	1E13
NH 110041	L	NUT	1H02
NH 110041	L	NUT	1L08
NH 110041	L	NUT	2E07
NH 110041	L	NUT	2E09
NH 110041	L	NUT	2L02
NH 110041	L	NUT	2L03
NH 112041	L	NUT	1I02
NH 112041	L	NUT 12MM	2H16
NH 112041	L	NUT	2I02
NH 116041	L	NUT	1I02
NH 116041	L	NUT	2L03
NH 406041		NUT	1L05
NH 406041		NUT	2G07
NH 406041	L	NUT	1C14
NH 406041	L	NUT	1D15
NH 406041	L	NUT	1H03
NH 406041	L	NUT	1H07
NH 406041	L	NUT	1H09
NH 406041	L	NUT	1H12
NH 406041	L	NUT (0.375" BSF)	2E08
NH 408041		NUT	2L02
NH 504041	L	NUT (0.500"UNC)	2E04
NH 504041	L	NUT	2E05
NH 600041	L	NUT	1L14
NH 600041	L	NUT	1L15
NH 604041	L	NUT	1C08
NH 604041	L	NUT	1D11
NH 604041	L	NUT	1D12
NH 604041	L	NUT	1L05
NH 604041	L	NUT	1L07
NH 604041	L	NUT	1L09

PART NUMBER		DESCRIPTION	REF.NO.
NH 604041	L	NUT	1L12
NH 604041	L	NUT	1M04
NH 604041	L	NUT	1N07
NH 604041	L	NUT	1N08
NH 604041	L	NUT	1N09
NH 604041	L	NUT	1N11
NH 604041	L	NUT	1N12
NH 604041	L	NUT	1N13
NH 604041	L	NUT	1N13
NH 604041	L	NUT	1007
NH 604041	L	NUT	1008
NH 604041	L	NUT	1009
NH 604041	L	NUT	1010
NH 604041	L	NUT	1011
NH 604041	L	NUT	1012
NH 604041	L	NUT	1014
NH 604041	L	NUT	2C03
NH 604041	L	NUT	2C04
NH 604041	L	NUT	2C05
NH 604041	L	NUT	2C07
NH 604041	L	NUT	2C08
NH 604041	L	NUT	2C09
NH 604041	L	NUT	2C10
NH 604041	L	NUT	2D02
NH 604041	L	NUT	2F09
NH 604041	L	NUT	2F12
NH 604041	L	NUT	2G02
NH 604041	L	NUT	2G04
NH 604041	L	NUT	2G06
NH 604041	L	NUT	2G07
NH 604041	L	NUT	2G08
NH 604041	L	NUT	2G10
NH 604041	L	NUT	2G11
NH 604041	L	NUT	2G12
NH 604041	L	NUT	2G13
NH 604041	L	NUT	2G15
NH 604041	L	NUT	2G18
NH 604041	L	NUT	2H02
NH 604041	L	NUT	2H03
NH 604041	L	NUT	2H04
NH 604041	L	NUT	2H05
NH 604041	L	NUT	2H06
NH 604041	L	NUT	2H07
NH 604041	L	NUT	2H08
NH 604041	L	NUT	2H13

PART NUMBER		DESCRIPTION	REF.NO.
NH 604041	L	NUT	2H14
NH 604041	L	NUT	2H15
NH 604041	L	NUT	2H16
NH 604041	L	NUT	2H17
NH 604041	L	NUT	2H18
NH 604041	L	NUT	2I02
NH 604041	L	NUT	2I15
NH 604041	L	NUT	2J09
NH 604041	L	NUT	2J10
NH 604041	L	NUT	2J11
NH 604041	L	NUT	2J16
NH 604041	L	NUT	2K04
NH 604041	L	NUT	2K05
NH 604041	L	NUT	2K06
NH 604041	L	NUT-SELF-LOCKING	2L12
NH 604041	L	NUT	2L13
NH 604041	L	NUT(0.25"UNF) FIXING HOSE TO	2L17
NH 604061	L	NUT	1K04
NH 604061	L	NUT 0.250 UNF	1007
NH 604061	L	NUT	1009
NH 604061	L	NUT	1011
NH 605041	L	NUT	1013
NH 605041	L	NUT	1C04
NH 605041	L	NUT	1C07
NH 605041	L	NUT	1C13
NH 605041	L	NUT	1D08
NH 605041	L	NUT	1D13
NH 605041	L	NUT	1D14
NH 605041	L	NUT	1D15
NH 605041	L	NUT	1E05
NH 605041	L	NUT	1E07
NH 605041	L	NUT	1E08
NH 605041	L	NUT	1E13
NH 605041	L	NUT	1F03
NH 605041	L	NUT	1F04
NH 605041	L	NUT	1G03
NH 605041	L	NUT	1G04
NH 605041	L	NUT	1H13
NH 605041	L	NUT	1K04
NH 605041	L	NUT	1K05
NH 605041	L	SPECIAL NUT	1L02
NH 605041	L	NUT	1L03
NH 605041	L	NUT	1L04
NH 605041	L	NUT	1L07
NH 605041	L	NUT	1L07

PART NUMBER		DESCRIPTION	REF.NO.
NH 605041	L	NUT	1L08
NH 605041	L	NUT	1L09
NH 605041	L	NUT	1L15
NH 605041	L	NUT	1M04
NH 605041	L	NUT	1M05
NH 605041	L	NUT	1M09
NH 605041	L	NUT	1M11
NH 605041	L	NUT	1002
NH 605041	L	NUT	1007
NH 605041	L	NUT-SELF-LOCKING	1009
NH 605041	L	NUT	1010
NH 605041	L	NUT	1011
NH 605041	L	NUT	2C02
NH 605041	L	NUT	2C03
NH 605041	L	NUT	2C04
NH 605041	L	NUT	2C05
NH 605041	L	NUT	2C06
NH 605041	L	NUT	2C07
NH 605041	L	NUT	2C08
NH 605041	L	NUT	2C10
NH 605041	L	NUT	2E13
NH 605041	L	NUT	2E16
NH 605041	L	NUT	2G02
NH 605041	L	NUT	2G13
NH 605041	L	NUT	2G16
NH 605041	L	NUT	2G17
NH 605041	L	NUT	2G18
NH 605041	L	NUT	2H02
NH 605041	L	NUT	2H04
NH 605041	L	NUT	2H06
NH 605041	L	NUT	2H07
NH 605041	L	NUT	2H08
NH 605041	L	NUT	2H15
NH 605041	L	NUT	2H16
NH 605041	L	NUT	2I02
NH 605041	L	NUT	2I04
NH 605041	L	NUT	2I15
NH 605041	L	NUT	2L12
NH 605041	L	NUT	2L14
NH 605041	L	NUT	2L15
NH 605041	L	NUT(3.3125"UNF) FIXING	2L17
NH 606041	L	NUT	1C14
NH 606041	L	NUT	1D13
NH 606041	L	NUT	1D15
NH 606041	L	NUT	1E13

PART NUMBER		DESCRIPTION	REF.NO.
NH 606041	L	NUT	1F02
NH 606041	L	NUT	1H02
NH 606041	L	NUT	1I05
NH 606041	L	NUT	1K07
NH 606041	L	NUT	1L07
NH 606041	L	NUT	1M04
NH 606041	L	NUT	1N11
NH 606041	L	NUT	1N12
NH 606041	L	NUT	1N13
NH 606041	L	NUT	1N13
NH 606041	L	NUT	1002
NH 606041	L	NUT	1003
NH 606041	L	NUT	1005
NH 606041	L	NUT	1006
NH 606041	L	NUT	1008
NH 606041	L	NUT	2C05
NH 606041	L	NUT	2C09
NH 606041	L	NUT	2E07
NH 606041	L	NUT	2G02
NH 607041	L	NUT	2G14
NH 607061	L	NUT	2E09
NH 608041	L	NUT	2L02
NH 608061	L	NUT (0.50" UNF)	1E11
NH 608061	L	NUT	2G09
NH 610041	L	NUT	2L03
NK 106081	L	NUT GRIP	2G13
NKC 484		END COVER FOR ALTERNATOR	2E10
NKC 484		COVER-END ALTERNATOR	2E12
NKC 484		COVER END-ALTERNATOR	2E14
NKC 484		COVER-ALTERNATOR	2E16
NM 104011	L	NUT	2H13
NN 105011		RIV NUT	1L12
NN 106011		NUTSERT	2H14
NN 106021		NUTSERT	2G10
NN 106021		NUTSERT	2H11
NN 106021		CAPTIVE NUT	2K05
NN 106021		NUT-SERT	2L05
NR 604090	L	NUT	1F08
NR 604090	L	NUT	1F09
NRC 25		FUEL PIPE SPILL RETURN TO TANK	1N13
NRC 25		FUEL PIPE SPILL RETURN TO	1N13
NRC 62		FUEL TANK DRAIN PLUG	1002
NRC 62		PLUG DRAIN-FUEL TANK	1003
NRC 62		PLUG-FUEL TANK DRAIN	1004
NRC 62		DRAIN PLUG-FUEL TANK	1006

PART NUMBER		DESCRIPTION	REF.NO.
NRC	76	MOUNTING BRACKET-FUEL PIPES	1N11
NRC	76	BRACKET-PIPE CLIP	1N12
NRC	76	BRACKET-PIPE CLIP	1N13
NRC	76	BRACKET-PIPE CLIP	1N13
NRC	132	TRACK ROD TUBE	1K06
NRC	142	STEERING TUBE	1K06
NRC	142	TUBE-LONGTITUDINAL-	1K07
NRC	162	TRACK ROD TUBE	1K06
NRC	174	LEVER	1013
NRC	201	TRACK ROD ADJUSTER TUBE	1K06
NRC	236	REAR CROSSMEMBER	2G02
NRC	1032	SCREW	1H09
NRC	1081	DRAIN PLUG WRENCH	2L11
NRC	1148	REAR SHACKLE PLATE	1J17
NRC	1175	FUEL PIPE PUMP TO FILTER	1N12
NRC	1269	STEERING RELAY ASSEMBLY	1K05
NRC	1302	BRACKET-ENGINE MOUNTING	1F02
NRC	1356	PIPE-RH REAR TO TEE PIECE	1L09
NRC	1357	PIPE-LH REAR TO TEE PIECE	1L09
NRC	1357	BRAKE PIPE-'T'PIECE TO LH	1L12
NRC	1358	PIPE-RH REAR TO TEE PIECE	1L09
NRC	1358	BRAKE PIPE-'T'PIECE TO RH	1L12
NRC	1360	HOSE CLIP	2D02
NRC	1360	HOSE CLIP	2D04
NRC	1362	CLIP HOSE	1F07
NRC	1363	CLIP-HOSE	1F07
NRC	1876	FUEL PIPE FILTER TO CARBURETTER	1N12
NRC	1995	BRACKET-TOP COVER AND TANK	2L15
NRC	1995	TOP COVER AND TANK MOUNTING BRACKET	2K14
NRC	2015	PIPE CATCH TANK TO TEE PIECE	2K14
NRC	2015	PIPE-CATCH TANK TO 'T' PIECE	2L15
NRC	2016	PIPE CATCH TANK TO CANISTER	2K14
NRC	2018	MOUNTING BRACKET-CATCH TANK	2K14
NRC	2029	WASHER-PLAIN	1D15
NRC	2051	TOWING HOOK ASSEMBLY	2L02
NRC	2052	RUBBER-ENGINE MOUNTING	1E13
NRC	2053	MOUNTING RUBBER REAR	1C14
NRC	2053	MOUNTING-RUBBER-ENGINE	1D15
NRC	2054	MOUNTING RUBBER FRONT	1C14
NRC	2054	MOUNTING-RUBBER-ENGINE	1D15
NRC	2087	FRONT MOUNTING BRACKET	2L18
NRC	2088	FRONT MOUNTING BRACKET	2L15
NRC	2089	REAR MOUNTING BRACKET	2L15
NRC	2106	FAN AND AIR PUMP SHROUD	2D02
NRC	2106	FAN AND AIR PUMP SHROUD	2L17

PART NUMBER		DESCRIPTION	REF.NO.
NRC	2129	HOSE FOR CLUTCH SLAVE CYLINDER	1G04
NRC	2130	HOSE FOR CLUTCH SLAVE CYLINDER	1G04
NRC	2159	RUBBER CONNECTION	1N17
NRC	2159	RUBBER CONNECTION	1N17
NRC	2159	CONNECTION-RUBBER	2L14
NRC	2160	BREATHER HOSE	1N17
NRC	2160	HOSE-BREATHER	2L14
NRC	2192	PIPE CATCH TANK TO TEE PIECE	2K14
NRC	2193	PROTECTOR BRACKET	2K14
NRC	2194	PIPE CANISTER TO ELBOW	2L15
NRC	2195	PIPE CATCH TANK TO BREATHER	2L15
NRC	2213	RUBBER CONNECTION	1N17
NRC	2213	CONNECTION-RUBBER	2L15
NRC	2214	RUBBER HOSE	1N17
NRC	2214	HOSE BREATHER	2L15
NRC	2220	HEAT SHIELD EXHAUST MANIFOLD	2C09
NRC	2340	REAR STEP	2I02
NRC	2342	SUPPORT BRACKET	2I02
NRC	2384	BOLT 0.375 UNF X 4.25"	2G02
NRC	2409	HOUSING-STEERING RELAY	1K05
NRC	2410	STEERING RELAY ASSEMBLY	1K05
NRC	2450	CHASSIS FRAME	2G02
NRC	2497	FAN COWL	2D03
NRC	2536	FILLER TUBE COMPLETE	1N17
NRC	2536	FILLER-FUEL	2L14
NRC	2536	FILLER-FUEL	2L15
NRC	2538	FILLER CAP	1N17
NRC	2538	CAP-FUEL FILLER	2L14
NRC	2538	CAP-FUEL FILLER	2L15
NRC	2570	FUEL PIPE	1N17
NRC	2572	FUEL PIPE	1N17
NRC	2614	ACCELERATOR PEDAL AND SHAFT	1O13
NRC	2615	ACCELERATOR PEDAL AND SHAFT	1O13
NRC	2618	RETAINER-GEARBOX MOUNTING	1I05
NRC	2618	MOUNTING PLATE	1I05
NRC	2622	CHASSIS FRAME	2G02
NRC	2652	TEE PIECE	1N17
NRC	2652	'T'PIECE	2L14
NRC	2652	'T'PIECE	2L15
NRC	2663	MOUNTING BRACKET	1N12
NRC	2741	FUEL PIPE-PUMP TO FILTER	1N12
NRC	2742	FUEL PIPE-TANK TO PUMP	1N12
NRC	2852	BOLT-SPECIAL	1K05
NRC	2861	FUEL PIPE	1N12
NRC	2864	BRACKET PIPE-CLIP	1F06

PART NUMBER		DESCRIPTION	REF.NO.
NRC	2900	SILENCER RH STG	2C06
NRC	2935	SWITCH BRACKET	2L12
NRC	2938	ENGINE BRACKET LH	1C02
NRC	2938	BRACKET-ENGINE MOUNTING	1E02
NRC	2959	MOUNTING BRACKET	1L16
NRC	3001	EXHAUST DOWNPIPE LH	2C11
NRC	3004	'U' BOLT	1J15
NRC	3006	BOTTOM PLATE RH	1J15
NRC	3115	HOSE FOR RADIATOR TOP	2D02
NRC	3150	SPRING WASHER	1K02
NRC	3159	MOUNTING BRACKET	2D04
NRC	3195	EXHAUST DOWNPIPE RH	2C11
NRC	3206	BOTTOM HOSE	2D04
NRC	3215	HANDLE FOR JACK SHAFT	2L11
NRC	3249	SHAFT FOR JACK	2L11
NRC	3264	ANCHOR PLATE	2G05
NRC	3287	PIPE CLUTCH JUMP HOSE-SLAVE CYLINDER	1G04
NRC	3301	SHIELD-HEAT LH	1F02
NRC	3314	BRACKET-ENGINE MOUNTING LH	1F02
NRC	3396	HEAT SHIELD FOR VALVE	1L12
NRC	3411	COVER-STEERING WHEEL CENTRE	1K02
NRC	3437	MOUNTING BRACKET	2D03
NRC	3472	SLIPPER PLATE	1J15
NRC	3472	SLIPPER PLATE	1J16
NRC	3615	CASING-BATTERY	2G04
NRC	3665	CASING-BATTERY	2G04
NRC	3670	CASING-BATTERY	2G04
NRC	3757	ACCELERATOR CABLE	1013
NRC	3766	BRACKET	2F08
NRC	3812	CROSSMEMBER NO 3 ASSEMBLY	2G02
NRC	3871	BATTERY FRAME	2G04
NRC	3882	'U' BOLT	1J15
NRC	3885	'U' BOLT	1J17
NRC	3888	'U' BOLT	1J15
NRC	3891	BOTTOM PLATE RH	1J15
NRC	3892	BOTTOM PLATE LH	1J15
NRC	3895	BOTTOM PLATE RH	1J15
NRC	3896	BOTTOM PLATE LH	1J15
NRC	3897	BOTTOM PLATE RH	1J17
NRC	3898	BOTTOM PLATE LH	1J17
NRC	3968	BRACKET	1013
NRC	4030	HOSE TO EXPANSION TANK	2D04
NRC	4041	HANDBRAKE LEVER	1L16
NRC	4059	BRACKET FOR VALVE	1L12
NRC	4059	BRACKET	1L13

PART NUMBER		DESCRIPTION	REF.NO.
NRC	4066	ACCELERATOR BRACKET	1013
NRC	4067	ACCELERATOR BRACKET	1013
NRC	4068	BRAKE PIPE-'T'PIECE TO R.H.	1L12
NRC	4069	BRAKE PIPE-'T'PIECE TO L.H	1L12
NRC	4070	BRAKE PIPE-COMPLETE-PDWA	1L12
NRC	4071	BRAKE PIPE-COMPLETE-PDWA	1L12
NRC	4072	MOUNTING BRACKET-TEE PIECE	1L12
NRC	4072	BRACKET	1L13
NRC	4075	PIPE-MASTER CYLINDER TO PDWA	1L12
NRC	4076	PIPE-MASTER CYLINDER TO PDWA	1L12
NRC	4101	PIPE-MASTER CYLINDER TO PDWA	1L12
NRC	4102	PIPE-MASTER CYLINDER TO PDWA	1L12
NRC	4136	GASKET FOR VALVE	1L12
NRC	4137	PLUG FOR VALVE	1L12
NRC	4184	BRACKET-UPPER FRONT BUMPER	2G02
NRC	4213	BUMPER-FRONT	2G02
NRC	4218	INTERMEDIATE EXHAUST PIPE	2C11
NRC	4222	PIPE-MASTER CYLINDER	1G04
NRC	4244	ABUTMENT BRACKET	1L16
NRC	4251	ADAPTOR,3 WAY	1L10
NRC	4251	ADAPTOR,3 WAY	1L10
NRC	4251	ADAPTOR,3 WAY	1L11
NRC	4251	ADAPTOR,3 WAY	1L11
NRC	4251	ADAPTOR-3 WAY	1L13
NRC	4252	PIPE-M/CYL TO 4 WAY	1L07
NRC	4253	PIPE-M/CYL TO 4 WAY	1L07
NRC	4254	BRAKE PIPE,FRONT	1L10
NRC	4256	BRAKE PIPE RH FRONT	1L10
NRC	4256	BRAKE PIPE RH FRONT	1L11
NRC	4257	BRAKE PIPE LH FRONT	1L10
NRC	4257	BRAKE PIPE LH FRONT	1L11
NRC	4258	BRAKE PIPE RH FRONT	1L10
NRC	4258	BRAKE PIPE FRONT RH	1L11
NRC	4259	BRAKE PIPE LH FRONT	1L10
NRC	4259	BRAKE PIPE FRONT LH	1L11
NRC	4260	BRAKE PIPE-REAR	1L10
NRC	4260	BRAKE PIPE,REAR	1L11
NRC	4263	BRAKE PIPE RH REAR	1L10
NRC	4263	BRAKE PIPE,RH REAR	1L11
NRC	4264	BRAKE PIPE LH REAR	1L10
NRC	4264	BRAKE PIPE,LH REAR	1L11
NRC	4266	BRAKE PIPE,FRONT	1L11
NRC	4268	BRAKE PIPE,PRIMARY	1L11
NRC	4269	BRAKE PIPE,SECONDARY	1L11
NRC	4270	VALVE,PDWA	1L11

PART NUMBER		DESCRIPTION	REF.NO.
NRC	4271	BRAKE PIPE,PRIMARY	1L11
NRC	4271	BRAKE PIPE	1L13
NRC	4272	BRAKE PIPE,SECONDARY	1L11
NRC	4272	BRAKE PIPE-SECONDARY	1L13
NRC	4278	BRAKE PIPE-REAR	1L10
NRC	4278	BRAKE PIPE,REAR	1L11
NRC	4279	BRAKE PIPE RH REAR	1L10
NRC	4279	BRAKE PIPE,RH REAR	1L11
NRC	4279	BRAKE PIPE-RH REAR	1L13
NRC	4280	BRAKE PIPE LH REAR	1L10
NRC	4280	BRAKE PIPE,LH REAR	1L11
NRC	4280	BRAKE PIPE-LH REAR	1L13
NRC	4282	VALVE,PDWA	1L11
NRC	4282	P.D.W.A.VALVE	1L12
NRC	4282	VALVE PDWA	1L13
NRC	4284	BRAKE PIPE,REAR	1L11
NRC	4285	BRACKET	1L10
NRC	4286	BRACKET	1L11
NRC	4286	BRACKET	1L13
NRC	4312	BRAKE PIPE-FRONT	1L13
NRC	4313	BRAKE PIPE-RH FRONT	1L13
NRC	4314	BRAKE PIPE-LH FRONT	1L13
NRC	4315	BRAKE PIPE-REAR	1L13
NRC	4326	STIFFENER PLATE	1L16
NRC	4329	HANDBRAKE CABLE	1L16
NRC	4336	BRACKET-LOWER FRONT BUMPER	2G02
NRC	4343	LEVER-STEERING RELAY	1K05
NRC	4346	STEERING WHEEL	1K02
NRC	4353	CHASSIS FRAME 109 6 CYLINDER	2G02
NRC	4354	CHASSIS FRAME 109	2G02
NRC	4355	CHASSIS FRAME 109 4 CYLINDER	2G02
NRC	4356	CHASSIS FRAME 109	2G02
NRC	4361	INTERMEDIATE SILENCER	2C11
NRC	4363	SILENCER AND TAILPIPE	2C11
NRC	4365	WASHER	1J16
NRC	4369	ENG STOP CONTROL DIESEL RHD	1O14
NRC	4370	ENG STOP CONTROL DIESEL LHD	1O14
NRC	4374	PIPE-CLUTCH	1G04
NRC	4442	DISTANCE PIECE	2C05
NRC	4543	CHASSIS FRAME 6 CYL 1 TON	2G02
NRC	4609	DRAG LINK	1K06
NRC	4609	DRAG LINK TUBE	1K07
NRC	4609	DRAG LINK TUBE	1K08
NRC	4642	CHASSIS FRAME 88	2G02
NRC	4656	DAMPER BRACKET RHD	1K08

PART NUMBER		DESCRIPTION	REF.NO.
NRC	4657	DAMPER BRACKET LHD	1K08
NRC	4755	BRACKET SUPPORT	1G04
NRC	4776	SUPPORT CLAMP FOR CHARCOAL	2L18
NRC	4790	CONNECTING HOSE-CANISTER	2L18
NRC	4794	BRAKE PIPE RH FRONT	1L11
NRC	4794	BRAKE PIPE-RH FRONT	1L13
NRC	4795	BRAKE PIPE LH FRONT	1L11
NRC	4795	BRAKE PIPE-LH FRONT	1L13
NRC	4825	'U' BOLT	1J15
NRC	4858	TOP WATER HOSE	2L18
NRC	4871	SHIELD FOR AIR PUMP PULLEY	2L18
NRC	4874	STIFFENING PLATE	2L18
NRC	4876	FUEL PIPE	1N12
NRC	4876	FUEL PIPE-ASSEMBLY SPILL	2L18
NRC	4878	HOSE-RADIATOR TO OVERFLOW	2L18
NRC	4880	VALVE,PDWA	1L11
NRC	4880	VALVE-PWDA	1L13
NRC	4899	BRACKET	1L10
NRC	4899	BRACKET	1L11
NRC	5002	'U' BOLT	1J15
NRC	5007	'U' BOLT	1J15
NRC	5019	FUEL PIPE	1N12
NRC	5020	FUEL PIPE	1N12
NRC	5027	BREATHER PIPE-CHARCOAL	2L18
NRC	5069	CHOKE CONTROL	1O14
NRC	5070	CHOKE CONTROL	1O14
NRC	5072	BRAKE PIPE-PRIMARY	1L13
NRC	5073	BRAKE PIPE-SECONDARY	1L13
NRC	5310	GROMMET PAD	2D03
NRC	5333	OVERFLOW HOSE	2D04
NRC	5338	BATTERY COVER	2G04
NRC	5347	PIPE-BRIDGE BRAKE WHEEL	1L03
NRC	5385	TAG WASHER/STEERING WHEEL	1K02
NRC	5387	BATTERY COVER	2G04
NRC	5403	SPACER TUBE	2C11
NRC	5460	BATTERY SPACER	2G04
NRC	5539	BOTTOM PLATE RH	1J15
NRC	5541	BOTTOM PLATE LH	1J15
NRC	5542	BOTTOM PLATE RH	1J15
NRC	5543	BATTERY SPACER	2G04
NRC	5606	LIFTING HANDLE ¢RH	2G02
NRC	5607	LIFTING HANDLE ¢LH	2G02
NRC	5700	BRAKE PIPE	1L12
NRC	5700	BRAKE PIPE	1L13
NRC	5701	BRAKE PIPE	1L12

PART NUMBER		DESCRIPTION	REF.NO.
NRC	5701	BRAKE PIPE	1L13
NRC	5704	BRAKE PIPE	1L12
NRC	5704	BRAKE PIPE	1L13
NRC	5705	BRAKE PIPE	1L12
NRC	5705	BRAKE PIPE	1L13
NRC	5829	FUEL TANK	1O02
NRC	5830	FUEL TANK	1O02
NRC	5830	FUEL TANK	1O04
NRC	5942	TOWING RING	2G12
NRC	5954	BOLT	2G02
NRC	5955	BOLT	2G12
NRC	5960	STEERING UNIT RH STG	1K02
NRC	5961	STEERING UNIT LH STG	1K02
NRC	5962	STEERING UNIT RH STG	1K02
NRC	5963	STEERING UNIT LH STG	1K02
NRC	6018	RADIATOR BLOCK	2D03
NRC	6037	ROCKER SHAFT	1K02
NRC	6096	MASTER CYLINDER-BRAKE	1L07
NRC	6096	BRAKE MASTER CYLINDER	1L08
NRC	6096	BRAKE MASTER CYLINDER	2L13
NRC	6191	BRAKE MASTER CYLINDER	2L13
NRC	6192	SERVO PIPE INLET MANIFOLD	1L07
NRC	6223	FUEL PIPE	1N12
NRC	6324	WASHER PLAIN	2L02
NRC	6324	WASHER PLAIN	2L03
NRC	6374	U BOLT	2C11
NRC	6474	STEERING DAMPER	1K08
NRC	6594	REAR SPRING	1J17
NRC	6595	REAR SPRING	1J17
NRC	6636	NUT PLATE ASSY	2L03
NRC	6745	BRAKE PIPE	1L13
NRC	6746	BRAKE PIPE	1L13
NRC	6905	ELBOW	1O02
NRC	6993	SCREW DRIVER	2L11
NRC	7064	BOLT	1J16
NRC	7135	MOUNTING FOR FUEL PUMP	1N08
NRC	7135	RUBBER MOUNT	1N08
NRC	7290	BRAKE PIPE-FRONT	1L11
NRC	7291	BRAKE PIPE-FRONT	1L10
NRC	7314	PROTECTION PLATE-RH	1J17
NRC	7314	PROTECTION PLATE RH	1J18
NRC	7315	PROTECTION PLATE-LH	1J17
NRC	7315	PROTECTION PLATE LH	1J18
NRC	7409	BRACKET	1L11
NRC	7409	BRACKET	1L13

PART NUMBER		DESCRIPTION	REF.NO.
NRC 7424		CLIP	1L10
NRC 7424		CLIP	1L11
NRC 7439		PROTECTION PAD-GERMANY ONLY	2G02
NRC 7456		SPPRT CLAMP FOR CHARCOAL CONTAINER	2K14
NRC 7456		CLAMP-CHARCOAL CONTAINER	2L15
NRC 7571		BUMPER BOLT COVER-çGERMANY ONLY	2G02
NRC 7578		WHEEL-ROAD	1J18
NRC 7706		CHASSIS FRAME	2G02
NRC 7707		CHASSIS FRAME	2G02
NRC 7725		HOSE	1N14
NRC 7725		HOSE	1N15
NRC 7725		HOSE	1N16
NRC 7725		PIPE-FUEL FILLER	1N17
NRC 7730		FUEL PIPE	1N17
NRC 7752		EXTENSION BRACKET	2L03
NRC 7755		STIFFENER	2L03
NRC 7867		SLEEVE-PEDAL SPRING	1G04
NRC 7867		SLEEVE-PEDAL SPRING	1L06
NRC 7869		SLEEVE-PEDAL SPRING	1L06
NRC 7948		FIXING PLATE	2L03
NRC 8102		CHECK STRAP	2G02
NRC 8494		HOSE,BRAKE	1L10
NRC 8494		HOSE,BRAKE	1L11
NRC 8494		HOSE-BRAKE	1L13
NRC 8495		HOSE-BRAKE	1L10
NRC 8495		HOSE,BRAKE	1L11
NRC 8497		HOSE-BRAKE	1L10
NRC 8497		HOSE,BRAKE	1L11
NRC 8497		HOSE-BRAKE	1L13
NRC 8727		FUEL TANK 2.6 PETROL	1004
NRC 8885		GASKET-PEDAL BOX-TOE BOX	2L12
NRC 9101		RETENTION RING	2H02
NRC 9101		RETENTION RING	2H05
NRC 9101		RETENTION RING	2H07
NRC 9101		RETENTION RING	2L11
NRC 9631		BATTERY SPACER ASSEMBLY	2G04
NS 106011		NUT	2L04
NT 108041	L	NUT	1C06
NT 108041	L	NUT	1E06
NT 108041	L	NUT	1I04
NT 108041	L	NUT	2J10
NT 108041	L	NUT	2J11
NT 108041	L	NUT	2J13
NT 407041	L	NUT(0.4375" BSF)	1H13
NT 604041	L	SPECIAL LOCK NUT	1009

PART NUMBER		DESCRIPTION	REF.NO.
NT 605041	L	NUT	2E16
NT 605061	L	LOCKNUT (0.3125" UNF)	1C06
NT 605061	L	NUT	1D05
NT 605061	L	NUT	1D07
NT 605061	L	NUT	1D15
NT 605061	L	NUT SPECIAL	1E06
NT 605061	L	NUT	1F10
NT 605061	L	NUT	1F11
NT 605061	L	NUT	1H05
NT 605061	L	NUT-SPECIAL	1L03
NT 605061	L	NUT	1L06
NT 605061	L	NUT-SELF LOCKING	2J10
NT 605061	L	NUT	2J11
NT 605061	L	NUT	2J13
NT 606041	L	SPECIAL NUT(0.375" UNF)	1L09
NT 606041	L	LOCK NUT	1L12
NT 612061		SPECIAL NUT(0.75" UNF)	1K02
NTC 1046		'J' BOLT	2G04
NV 106041	L	NUT-NYLOC	2C05
NV 106041	L	NUT-NYLOC	2C06
NV 106041	L	NUT	2C08
NV 106041	L	NUT	2G02
NV 106041	L	NUT	2G05
NV 106041	L	NUT	2H02
NV 604041	L	NUT 0.25 UNF	1K06
NV 604041	L	NUT	1K07
NV 604041	L	NUT	1K08
NV 605041	L	NUT-SELF-LOCKING	1K04
NV 605041	L	NUT-SELF-LOCKING	1L07
NV 605041	L	NUT(0.3125" UNF)	1N06
NV 605041	L	NUT-SELF-LOCKING	1N10
NV 605041	L	NUT	2I02
NV 605041	L	NUT-SELF-LOCKING	2L12
NV 606041	L	NUT-SELF LOCKING	2G02
NV 606041	L	NUT	2I02
NY 105041	L	NUT	2G06
NY 106041	L	NUT	1I11
NY 106041	L	NYLOC-NUT	2C03
NY 106041	L	NUT	2C11
NY 106041	L	NUT	2D02
NY 106041	L	NUT-SELF-LOCKING	2G18
NY 106041	L	NUT NYLOC	2H05
NY 106041	L	NUT	2L04
NY 106041	L	NUT-SELF-LOCKING	2L14
NY 106041	L	NUT-NYLOC	2L15

PART NUMBER		DESCRIPTION	REF.NO.
NY 106161	L	NUT-NYLOC	2K05
NY 108041	L	NUT	1I10
NY 108041	L	NYLOC NUT 8 MM	1J15
NY 108041	L	NUT	1J16
NY 108041	L	NUT	1K08
NY 108041	L	NUT	2H13
NY 110041	L	NUT	1C14
NY 110041	L	NUT-SELF LOCKING	1D15
NY 110041	L	NUT	1E13
NY 110041	L	SELF LOCKING NUT 10 MM	1J17
NY 110041	L	NUT	1J18
NY 110041	L	NUT	1K05
NY 110041	L	NUT	2G02
NY 110041	L	NUT	2G12
NY 110041	L	NUT	2H10
NY 112041	L	NYLOC NUT 12 MM	1J15
NY 112041	L	NUT	1J16
NY 112041	L	NUT-SELF LOCKING	1J17
NY 112041	L	NUT	1J18
NY 116041	L	NUT	1I10
NY 120041	L	NUT	1I11
NY 604041	L	NUT	1D10
NY 604041	L	NUT	1E10
NY 604041	L	NUT-SELF-LOCKING	1F12
NY 604041	L	NUT-SELF-LOCKING	1K07
NY 604041	L	NUT-SELF-LOCKING	1N07
NY 604041	L	NUT-SELF LOCKING	2C03
NY 604041	L	NUT-SELF LOCKING	2C04
NY 604041	L	NUT-SELF LOCKING	2C05
NY 604041	L	NUT-SELF-LOCKING	2C06
NY 604041	L	NUT-SELF-LOCKING	2C07
NY 604041	L	NUT-SELF-LOCKING	2C08
NY 604041	L	NUT-SELF-LOCKING	2C10
NY 604041	L	NUT-SELF-LOCKING	2D02
NY 604041	L	NUT-SELF LOCKING	2G02
NY 604041	L	NUT	2G05
NY 604041	L	NUT-SELF LOCKING	2H02
NY 604041	L	NUT-SELF LOCKING	2H05
NY 604041	L	NUT	2H12
NY 604041	L	NUT(0.25 UNF)FIXING FAN TO	2L17
NY 605041	L	NUT-SELF LOCKING	1H13
NY 605041	L	NYLOC NUT 0.3125 UNF	2E11
NY 605041	L	NUT-SELF-LOCKING	2E15
NY 605041	L	NUT-SELF LOCKING	2F12
NY 605041	L	NUT	2G05

PART NUMBER		DESCRIPTION	REF.NO.
NY 605041	L	NUT-SELF-LOCKING	2G10
NY 606041	L	NUT-SELF-LOCKING	1E13
NY 606041	L	NUT 0.375 UNF	1J07
NY 606041	L	NUT-SELF-LOCKING	1K07
NY 606041	L	NUT	1K08
NY 606041	L	NUT-SELF-LOCKING	1L14
NY 606041	L	NUT-SELF-LOCKING	1L15
NY 606041	L	NUT-SELF-LOCKING	1002
NY 606041	L	NUT-SELF-LOCKING	1003
NY 606041	L	NUT-SELF-LOCKING	1005
NY 606041	L	NUT-SELF-LOCKING	1006
NY 606041	L	NUT-SELF LOCKING	2G02
NY 607041	L	NUT	1D10
NY 607041	L	NUT	1E10
NY 607041	L	NUT	1F11
NY 607041	L	NUT	1J04
NY 607041	L	NUT-SELF LOCKING	1J16
NY 607041	L	NUT-SELF-LOCKING	1K04
NY 607041	L	NUT	1K05
NY 607041	L	NUT-SELF-LOCKING	1L15
NY 607041	L	NUT-SELF-LOCKING	1008
NY 607041	L	NYLOC NUT(0.4425 UNF)HUB AND	2L17
NY 608041	L	NUT	1J16
NZ 606041	L	NUT(0.375" UNF)	1J02
NZ 606041	L	NUT-SELF LOCKING	1J03
NZ 606041	L	NUT	1J04
NZ 606041	L	NUT	1J14
PA 105101	L	PEG	1E11
PA 108361	L	ROLL PIN	1I04
PA 110260	L	ROLL PIN	1I12
PA 110300	L	ROLL-PIN	1I12
PC 106641		CLEVIS PIN	2H14
PC 108291		CLEVIS PIN	1L16
PFS 510	L	NUT	2J08
PRC 39		REAR FLASHER LAMP	2F04
PRC 1001		CABLE ENGINE HARNESS	2F11
PRC 1039		SWITCH-VACUUM ACTUATOR	1I10
PRC 1080		WASHER BOTTLE	2F15
PRC 1081		CAP	2F15
PRC 1106		BATTERY LEAD BATTERY TO SOLENOID	2F12
PRC 1107		BATTERY LEAD BATTERY TO SOLENOID	2F12
PRC 1122		CABLE STRAP	2L08
PRC 1265		CABLE ASSEMBLY COIL TO PUMP	1N08
PRC 1308		CABLE ASSEMBLY	2F12
PRC 1308		CABLE ASSEMBLY-COIL TO	2L17

PART NUMBER		DESCRIPTION	REF.NO.
PRC	1330	BLADE-WIPER	2F06
PRC	1331	MAIN HARNESS RH STG	2F10
PRC	1332	MAIN HARNESS LH STG	2F10
PRC	1333	BULKHEAD GROMMET PLATE	2F10
PRC	1333	BRACKET-MAIN HARNESS	2F11
PRC	1348	MAIN HARNESS DIESEL RH STG	2F11
PRC	1349	MAIN HARNESS DIESEL LH STG	2F11
PRC	1551	LEAD STARTER MOTOR TO SOLENOID	2F12
PRC	1597	LEAD-BATTERY TO SOLENOID	2F12
PRC	1598	LEAD-BATTERY TO EARTH	2F12
PRC	1599	SPEEDOMETER CABLE 109V8	2F08
PRC	1686	GAUGE-WATER TEMPERATURE	2F08
PRC	1687	BRACKET-PIPE CLIP	1H09
PRC	1705	PARK BRAKE WARNING LIGHT-LENS	2L13
PRC	1714	CABLE ASSY PARK BRAKE WARNING-LIGHT	2L13
PRC	1716	BALLAST RESISTOR	2F09
PRC	1773	SPEEDOMETER MPH	2F08
PRC	1774	SPEEDOMETER WITH TRIP KPH	2F08
PRC	1775	SPEEDOMETER-MPH	2F08
PRC	1782	SPEEDOMETER WITH TRIP KPH	2F08
PRC	1814	LENS	2F13
PRC	1814	LENS SERVICE BRAKE WARNING LIGHT	2L13
PRC	1815	CABLE ASSEMBLY	2L13
PRC	1821	CABLE ASSEMBLY-COIL TO PUMP	1N08
PRC	1932	BRACKET	2F08
PRC	1939	CABLE-DASH	2F10
PRC	2004	MAIN HARNESS	2F10
PRC	2005	MAIN HARNESS	2F10
PRC	2006	BRACKET-ELECTRIC HORN	2F09
PRC	2057	HORN-ELECTRIC	2F09
PRC	2065	SPEEDOMETER CABLE	2F08
PRC	2068	LEAD-EARTH	2F12
PRC	2104	BRACKET	2F08
PRC	2190	LENS	2F13
PRC	2215	CABLE ASSY HANDBRAKE SWITCH	2L13
PRC	2236	TRANSMITTER-OIL PUMP	1F05
PRC	2425	CABLE,BRAKE WARNING	2F13
PRC	2426	CABLE,BRAKE WARNING	2F13
PRC	2427	CABLE	2F13
PRC	2437	WASHER JET	2F15
PRC	2490	SPEEDOMETER DRIVE CABLE	2L18
PRC	2516	LAMP FOG	2F05
PRC	2530	MAIN HARNESS	2F10
PRC	2531	MAIN HARNESS	2F10
PRC	2533	MAIN HARNESS	2F11

PART NUMBER		DESCRIPTION	REF.NO.
PRC	2534	MAIN HARNESS	2F11
PRC	2620	ARM-WIPER BLADE LH	2F06
PRC	2621	ARM-WIPER BLADE RH	2F06
PRC	2627	SWITCH-REAR FOG LAMP	2F05
PRC	2627	SWITCH,REAR FOGLAMP	2F09
PRC	2631	SPEEDOMETER CABLE	2F08
PRC	2633	HARNESS-MAIN RH STEERING	2F10
PRC	2634	HARNESS-MAIN LH STEERING	2F10
PRC	2670	SWITCH-IGNITION	2F09
PRC	2750	MAIN HARNESS	2F10
PRC	2751	MAIN HARNESS	2F10
PRC	2752	MAIN HARNESS	2F11
PRC	2753	MAIN HARNESS	2F11
PRC	2754	MAIN HARNESS	2F10
PRC	2755	MAIN HARNESS	2F10
PRC	2763	PANEL COMPLETE-GAUGE	2F08
PRC	2767	SPEEDOMETER-M.P.H.	2F08
PRC	2769	SPEEDOMETER-M.P.H.	2F08
PRC	2774	REAR FLASHER LAMP	2F04
PRC	2961	SPEEDOMETER-K.P.H.	2F08
PRC	2966	IGNITION SWITCH COVER	2F09
PRC	2978	BRACKET	2F09
PRC	3197	CABLE,BRAKE WARNING	2F13
PRC	3198	CABLE,BRAKE WARNING	2F13
PRC	3199	CABLE,BRAKE WARNING	2F13
PRC	3200	CABLE,BRAKE WARNING	2F13
PRC	3299	LAMP REVERSE	2F05
PRC	3332	EARTH LEAD	1N08
PRC	3343	ELECTRIC FUEL PUMP	1N08
PRC	3369	WASHER PUMP	2F15
PRC	3384	ARM-WIPER BLADE LH	2F06
PRC	3385	ARM-WIPER BLADE RH	2F06
PRC	3386	BLADE-WIPER	2F06
PRC	3458	BRACKET	2F08
PRC	3502	CABLE-DASH	2F10
PRC	3537	CLIP	2H02
PRC	3537	CLIP	2H05
PRC	3537	CLIP	2H07
PRC	3588	PLINTH-NUMBER PLATE LAMP	2F04
PRC	3588	NUMBER PLATE PANEL	2H13
PRC	3595	DOUBLE CLIP	2F08
PRC	3605	SPEEDOMETER-K.P.H.	2F08
PRC	3617	CABLE-NUMBER PLATE LAMP	2F04
PRC	3620	LEAD ROOF LAMP	2J06
PRC	3620	LEAD ROOF LAMP	2J07

PART NUMBER		DESCRIPTION	REF.NO.
PRC 3625		LEAD-ENGINE TO EARTH	2F12
PRC 3670		LEAD	2F05
PRC 3672		OUTER CASING	2F06
PRC 3717		SPEEDO DRIVE-INSTRUMENT END	2F08
PRC 3717		SPEEDOMETER DRIVE CABLE-	2L18
PRC 3719		SPEEDO DRIVE-DRIVE END	2F08
PRC 3720		SPEEDO DRIVE-DRIVE END	2F08
PRC 3721		SPEEDOMETER DRIVE CABLE-	2L18
PRC 3722		SPEEDO DRIVE-DRIVE END	2F08
PRC 3727		LEAD JUNCTION TO LH LAMP	2F02
PRC 3753		HARNESS AUXILIARY LAMPS	2F02
PRC 3754		CABLE ASSY	2F02
PRC 3755		CABLE ASSY	2F02
PRC 3760		NAMEPLATE AUXILIARY MAIN BEAM	2F02
PRC 4100		MAIN HARNESS	2F11
PRC 4102		MAIN HARNESS	2F11
PRC 4175		CABLE	1E11
PRC 4279		BATTERY-14 PLATE	2F12
PRC 4299		BUZZER	2F14
PRC 4302		CABLE ASSY,SEAT BELT WARNING	2F14
PRC 4304		MOUNTING CLIP-BUZZER	2F14
PRC 4727		BATTERY-14 PLATE	2F12
PS 103121	L	SPLIT PIN	2H14
PS 104121	L	SPLIT PIN	1L16
PS 105251		SPLIT PIN	1K06
PS 105251		PIN-SPLIT	1K07
PS 105251		SPLIT PIN	1K08
PS 105281		PIN-SPLIT	1K07
PS 608080		PIN	1L06
PS 608080		PIN-SPLIT	2L13
PS 608101	L	SPLIT PIN	1H08
PS 608101	L	PIN-SPLIT	1H10
PS 608101	L	PIN-SPLIT	1J07
PS 608101	L	PIN-SPLIT	1J08
PS 608101	L	PIN-SPLIT	1J10
PS 612080		SPLIT PIN	1L06
PS 612080		PIN-SPLIT	2H13
PS 612080		PIN-SPLIT	2L13
RA 608177	L	POP RIVET	2H12
RA 612156	L	RIVET	2K05
RA 612183		POP RIVET	2H09
RA 612253	L	POP RIVET	2G05
RA 612346		POP RIVET	2G05
RA 612347	L	POP RIVET	2J16
RA 612373	L	RIVET	2H03

PART NUMBER		DESCRIPTION	REF.NO.
RA 612373	L	RIVET	2H06
RA 612373	L	RIVET	2H07
RA 612373	L	POP RIVET	2H12
RJ 608413		POP RIVET	2H09
RJ 608603		POP RIVET	2H13
RTC 162		LOCK WASHER FOR THROTTLE LEVER	1M06
RTC 165		O RING FOR BUSH	1M06
RTC 166		LOCK WASHER FOR THROTTLE LEVER	1M02
RTC 198		BRUSH KIT-WIPER MOTOR	2F06
RTC 202		CABLE RACK ASSEMBLY FLEX	2F06
RTC 207		BOLT	1L04
RTC 207		SELF TAPPING BOLT FOR BRAKE SHOE	1L02
RTC 210		LENS FOR TAIL LAMP	2F03
RTC 210		LENS-STOP TAIL LAMP	2F03
RTC 222		CLEAT-(BREATHER TO BRAKE PIPE)	1J02
RTC 222		CLEAT-(BREATHER TO BRAKE PIPE)	1J03
RTC 222		CLEAT-(BREATHER TO BRAKE PIPE)	1J12
RTC 222		CLIP-FIRTREE	2F12
RTC 222		CLIP-FIRTREE	2L08
RTC 222		CLIP-FIRTREE	2L14
RTC 222		CLIP-FIRTREE	2L15
RTC 222		CLEAT	2L17
RTC 223		CLIP	2L08
RTC 253		CAP-BRAKE MASTER CYLINDER	1L07
RTC 254		DRIVE ASSY FOR STARTER MOTOR	2E09
RTC 315		BRUSH AND SPRING DISTRIBUTOR	2E04
RTC 315		BRUSH AND SPRING DISTRIBUTOR	2E03
RTC 324		BEARING FOR STEERING COLUMN	1K02
RTC 364		CONTACT POINTS	2E03
RTC 364		CONTACT POINTS-DISTRIBUTOR	2E04
RTC 430		SWITCH DRIVING LAMPS	2F02
RTC 430		SWITCH FOR FOGLAMP,SPOTLAMP	2F09
RTC 561		INNER COLUMN LH STG	1K02
RTC 562		INNER COLUMN RH STG	1K02
RTC 600		PIN-SPLIT	2I02
RTC 604		WASHER PLAIN	2D03
RTC 605		WASHER-PLAIN	1K04
RTC 605		WASHER-PLAIN	1K06
RTC 605		WASHER-PLAIN	1K07
RTC 605		PLAIN WSHR-0.437 ¢X 0.875 X 0.093	1007
RTC 605		WASHER-PLAIN	1008
RTC 605		WASHER-PLAIN	1011
RTC 605		WASHER-PLAIN	1014
RTC 608		NUT	1H11
RTC 608		NUT	1L07

PART NUMBER		DESCRIPTION	REF.NO.
RTC	608	NUT	1L09
RTC	608	NUT	1L10
RTC	608	NUT	1L11
RTC	608	NUT	1L12
RTC	608	NUT	1L13
RTC	608	NUT	1N11
RTC	608	NUT	1N12
RTC	608	NUT	1N13
RTC	608	NUT	1N13
RTC	608	NUT	1N14
RTC	608	NUT	1N15
RTC	608	NUT	1N16
RTC	608	NUT	1N17
RTC	608	NUT	1O10
RTC	608	NUT	1O12
RTC	608	NUT	1O14
RTC	608	NUT	2F05
RTC	608	NUT	2F10
RTC	608	NUT	2G08
RTC	608	NUT	2G17
RTC	608	NUT	2H02
RTC	608	NUT	2H05
RTC	608	NUT	2H07
RTC	608	NUT	2H15
RTC	608	NUT	2H16
RTC	608	NUT	2H17
RTC	608	NUT	2H18
RTC	608	NUT	2I02
RTC	608	NUT	2J09
RTC	608	NUT	2J11
RTC	608	NUT	2J12
RTC	608	NUT	2J13
RTC	608	NUT	2K04
RTC	608	NUT	2K05
RTC	608	NUT	2K06
RTC	608	NUT	2L12
RTC	608	NUT	2L14
RTC	609	WASHER	1C08
RTC	609	WASHER-PLAIN	1F04
RTC	609	WASHER PLAIN	1F08
RTC	609	WASHER PLAIN	1F09
RTC	609	WASHER-PLAIN	1J05
RTC	609	PLAIN WASHER	1M04
RTC	609	WASHER-PLAIN	1N08
RTC	609	WASHER-PLAIN	2C04

PART NUMBER		DESCRIPTION	REF.NO.
RTC	613	WASHER-PLAIN	2E02
RTC	613	WASHER-PLAIN	2E13
RTC	613	WASHER-PLAIN	2G17
RTC	614	PIN-SPLIT	2J09
RTC	614	PIN-SPLIT	2J11
RTC	614	PIN-SPLIT	2J13
RTC	615	WASHER	2J13
RTC	616	RIVET	1I05
RTC	617	WASHER PLAIN	1K03
RTC	617	WASHER-PLAIN	2J16
RTC	617	WASHER-PLAIN	2K06
RTC	622	PLAIN WASHER	2G10
RTC	622	PLAIN WASHER	2H05
RTC	622	WASHER-PLAIN	2H07
RTC	622	WASHER-PLAIN	2J10
RTC	622	WASHER-PLAIN	2J11
RTC	623	WASHER PLAIN	1K02
RTC	626	WASHER-PLAIN	1G04
RTC	631	PIN FOR DIFF SPINDLE	1J08
RTC	633	PLUG FOR ROCKER SHAFT ENDS	1C06
RTC	633	PLUG-SHAFT	1E06
RTC	636	PLUG FOR ROCKER SHAFT	1D08
RTC	639	BOX SPANNER	2L11
RTC	640	SPRING FOR HANDBRAKE RELEASE	1L14
RTC	706	MUDFLAP KIT	2H14
RTC	772	CYLINDER HEAD 2.25" DIESEL	1E11
RTC	773	BOLT	1J13
RTC	773	BOLT 12 MM	1J09
RTC	819	ARM FOR WIPER BLADE LH	2F06
RTC	822	ARM FOR WIPER BLADE RH	2F06
RTC	830	BRUSH-STARTER MOTOR	2E09
RTC	831	CAP-STARTER MOTOR END	2E09
RTC	834	PINION-STARTER MOTOR	2E09
RTC	836	SEAL KIT-STARTER MOTOR	2E09
RTC	837	SOLENOID-STARTER MOTOR	2E09
RTC	839	BOLT-STARTER MOTOR	2E09
RTC	840	PLAIN WASHER	1C05
RTC	840	WASHER-PLAIN	1E05
RTC	840	WASHER-PLAIN	1K05
RTC	844	COVER-REAR AXLE	1J12
RTC	844	COVER FOR GEAR CARRIER	1J03
RTC	845	SUPPORT PLATE GEAR CARRIER	1J03
RTC	845	BRACKET-REAR AXLE	1J12
RTC	1007	CIRCLIP FOR CHOKE CONTROL	1O14
RTC	1139	GASKET-REAR AXLE	1J12

PART NUMBER			DESCRIPTION	REF.NO.
RTC	1139		GASKET FOR REAR COVER	1J03
RTC	1148		JOINT WASHER FOR GAUGE UNIT	1O04
RTC	1323		LEVER-SOLENOID	2E09
RTC	1392		CROWN WHEEL AND PINION	1J13
RTC	1392		CROWN WHEEL AND PINION 4.7.1	1J09
RTC	1412		ROLLER BEARING-LAYSHAFT REAR	1H05
RTC	1481		CARBURETTER GASKET PACK	1M08
RTC	1481		GASKET KIT	1M11
RTC	1688		SELECTOR FORK	1I12
RTC	1718		BEARING SET-MAIN STANDARD	1F03
RTC	1718	10	BEARING-SET MAIN 0.010" U/S	1F03
RTC	1718	20	BEARING-SET-MAIN 0.020" U/S	1F03
RTC	1720		MAIN BEARING STD	1D04
RTC	1720	10	MAIN BEARING 010 U/S	1D04
RTC	1720	20	MAIN BEARING 020 U/S	1D04
RTC	1721		CONNECTING ROD BEARING STD	1D04
RTC	1721	10	CONN ROD BEARING 010 U/S	1D04
RTC	1721	20	CONN ROD BEARING 020 U/S	1D04
RTC	1729		MAIN BEARING STD	1C03
RTC	1729		BEARING-MAIN	1E03
RTC	1729	10	MAIN BEARING 010 U/S	1C03
RTC	1729	20	MAIN BEARING 020 U/S	1C03
RTC	1730		CONNECTING ROD BEARING STD	1C03
RTC	1730		BEARING CONNECTING ROD	1E03
RTC	1730	10	CONN ROD BEARING 010 U/S	1C03
RTC	1730	20	CONN ROD BEARING 020 U/S	1C03
RTC	1806		LONGTITUDINAL TUBE ASSY	1K06
RTC	1806		LONGTITUDINAL TUBE,	1K07
RTC	1808		BALL JOINT ASSY RH THREAD	1K06
RTC	1808		BALL JOINT-STEERING LINKS	1K07
RTC	1808		BALL JOINT RH THREAD	1K08
RTC	1809		BALL JOINT ASSY LH THREAD	1K06
RTC	1809		BALL JOINT	1K07
RTC	1809		BALL JOINT LH THREAD	1K08
RTC	1810		STEERING TRACK ROD ASSY	1K06
RTC	1850		STG BALL JOINT RH THREAD	1K06
RTC	1851		STEERING TRACK ROD ASSEMBLY	1K06
RTC	1920		DOWEL 8 MM FOR FRONT ROAD	1J15
RTC	1920		SCREW-ROAD SPRING	1J16
RTC	1921		DOWEL 10MM FOR REAR ROAD	1J17
RTC	1921		SCREW-ROAD SPRING	1J18
RTC	1945		GEARBOX ASSEMBLY LESS TRANSFER	1H02
RTC	1956		DOWEL	1G03
RTC	1956		DETENT SPRING-SYNCHRONISING CLUTCH	1H04
RTC	1957		CIRCLIP	1H04

PART NUMBER			DESCRIPTION	REF.NO.
RTC	1958		SELECTOR FORK	1H11
RTC	1962		WASHER THRUST	1H04
RTC	1964		LOCATING SCREW	1D08
RTC	1975		SEAL FIXING WATER PUMP	1D10
RTC	1979		PEG FOR DISTANCE SLEEVE	1H04
RTC	1979		PEG-OUTPUT SHAFT	1H07
RTC	1984		CIRCLIP	1H04
RTC	2117		BEARING SET-CONNECTING ROD-STANDARD	1F04
RTC	2117	20	BEARING SET-CONNECTING ROD-	1F04
RTC	2149		GEARS-SYNCHROME	1I06
RTC	2150		MAIN SHAFT AND SYNCHROME	1I06
RTC	2186	S	PISTON ASSEMBLY-STANDARD	1F04
RTC	2186	20	PISTON ASSEMBLY-0.020" O/S	1F04
RTC	2195		INNER AND OUTER MEMBERS	1H04
RTC	2195		INNER AND OUTER MEMBER	1H06
RTC	2244		CARBURETTER	2L12
RTC	2344		REVERSE GEAR MODIFICATION KIT	1H06
RTC	2349		COVER-ROCKER LH	1F10
RTC	2352	R	ENGINE ASSEMBLY 2.25 PETROL	1C02
RTC	2353	R	ENGINE ASSEMBLY REBUILT	1E02
RTC	2373		ENGINE ASSEMBLY SHORT	1F02
RTC	2379	R	ENGINE ASSEMBLY 2.25 PETROL	1C02
RTC	2388	R	ENGINE ASSEMBLY REBUILT 2.6	1D03
RTC	2407	N	ENGINE ASSEMBLY 2.6 PETROL	1D03
RTC	2408		RING SET-PISTON STANDARD	1F04
RTC	2408	20	RING SET-PISTON-0.020" O/S	1F04
RTC	2410		PISTON RING SET-STANDARD	1C03
RTC	2410	20	PISTON RING SET-0.020 OS	1C03
RTC	2410	40	PISTON RING SET-0.040 OS	1C03
RTC	2411		PISTON RING SET STD	1D04
RTC	2411	20	PISTON RING SET 0.020 OS	1D04
RTC	2411	40	PISTON RING SET 0.040 OS	1D04
RTC	2415		PISTON RING SET STANDARD	1E03
RTC	2415	20	PISTON RING SET 0.020 OS	1E03
RTC	2415	40	PISTON RING SET 0.040 OS	1E03
RTC	2475	N	ENGINE COMPLETE ASSEMBLY	1D02
RTC	2547		STEERING DRAG LINK ASSY	1K06
RTC	2547		DRAG LINK AND DAMPER BRACKET	1K07
RTC	2547		DRAG LINK TUBE ASSY	1K08
RTC	2554		PUMP-OIL	1C04
RTC	2554		OIL PUMP	1E04
RTC	2598		COVER-ROCKER RH	1F10
RTC	2600	N	ENGINE ASSEMBLY-STRIPPED	1F02
RTC	2600	R	ENGINE ASSEMBLY-STRIPPED	1F02
RTC	2618		CYLINDER BLOCK 2.25 PETROL	1C02

PART NUMBER			DESCRIPTION	REF.NO.
RTC	2618		CYLINDER BLOCK	1E02
RTC	2620	R	ENGINE ASSY STRIPPED	1C02
RTC	2626		MAIN BEARING STD	1C03
RTC	2626		BEARING-MAIN	1E03
RTC	2626	10	MAIN BEARING 010 U/S	1C03
RTC	2626	20	MAIN BEARING 020 U/S	1C03
RTC	2642		SHORT ENGINE 2.6 PETROL	1D03
RTC	2643		SHORT ENGINE 2.6 PETROL	1D03
RTC	2672	N	ENGINE ASSEMBLY 2.25 PETROL	1C02
RTC	2673	R	ENGINE ASSY STRIPPED	1C02
RTC	2684		PRIMARY PINION AND CONSTANT GEAR	1H04
RTC	2684		PRIMARY PINION AND CONSTANT GEAR	1H05
RTC	2685		INNER AND OUTER MEMBERS	1H04
RTC	2705	N	GEARBOX ASSEMBLY	1H02
RTC	2705	R	GEARBOX ASSEMBLY-REBUILT	1H02
RTC	2726		BEARING	1J08
RTC	2774		PISTON RING SET STD	1C03
RTC	2774	20	PISTON RING SET 0.020 OS	1C03
RTC	2774	40	PISTON RING SET 0.040 OS	1C03
RTC	2776		PISTON RING SET STD	1E03
RTC	2776	20	PISTON RING SET 0.020 OS	1E03
RTC	2776	40	PISTON RING SET 0.040 OS	1E03
RTC	2825		THRUST WASHER	1C03
RTC	2825		WASHER THRUST	1E03
RTC	2863	S	PISTON ASSY STD 7:1 CR	1C03
RTC	2863	20	PISTON ASSY 0.020 OS 7:1 CR	1C03
RTC	2917		SHORT ENGINE 7:1	1C02
RTC	2920		SHORT ENGINE DIESEL	1E02
RTC	2926		CYLINDER BLOCK	1C02
RTC	2926		CYLINDER BLOCK	1E02
RTC	2955		KIT-CONVERSION CYL HEAD	1C11
RTC	2956		KIT CONVERSION-CYL HEAD	1E11
RTC	2957		KIT-CAMSHAFT	1C05
RTC	2958		KIT CONVERSION-CAMSHAFT	1E05
RTC	2960		LININGS FOR TRANSMISSION	1L05
RTC	2961		LINING-TRANSMISSION BRAKE SHOE	1L05
RTC	2976	R	ENGINE ASSEMBLY 2.25 DIESEL	1E02
RTC	2978		ENGINE-SHORT 8:1	1C02
RTC	2981	R	ENGINE ASSEMBLY 2.25 PETROL	1C02
RTC	2990		CROWN WHEEL & PINION	1J08
RTC	3010	R	ENGINE ASSEMBLY 2.25 PETROL	1C02
RTC	3013		KIT CONVERSION-ENGINE	1E02
RTC	3014		CONVERSION KIT-ENGINE	1C02
RTC	3072		WATER PUMP KIT-OVERHAUL	1C10
RTC	3072		OVERHAUL KIT-WATER PUMP	1E09

PART NUMBER		DESCRIPTION	REF.NO.
RTC	3072	WATER PUMP OVERHAUL KIT	2L07
RTC	3105	SEAT ADJUSTMENT KNOB BLACK	2J14
RTC	3106	SEAT ADJUSTMENT KNOB GREY	2J14
RTC	3107	MECHANISM COVER RH	2J14
RTC	3108	MECHANISM COVER LH	2J14
RTC	3176	BRAKE ADJUSTER KIT	1L02
RTC	3176	BRAKE ADJUSTER KIT	1L03
RTC	3176	BRAKE ADJUSTER KIT	1L04
RTC	3176	BRAKE ADJUSTER KIT	2L07
RTC	3183	ELEMENT FOR FILTER	1D13
RTC	3184	OIL FILTER ELEMENT	1C12
RTC	3184	FILTER-OIL	1E12
RTC	3254	RTV/HYLOSIL SEALING COMPOUND	2L07
RTC	3270	CONTACT POINTS	2E02
RTC	3270	CONTACT POINTS-DISTRIBUTOR	2E04
RTC	3270	CONTACT POINTS-DISTRIBUTOR	2E05
RTC	3270	CONTACT POINTS	2L17
RTC	3278	DISTRIBUTOR CAP	2E03
RTC	3282	CONTACT POINTS-DISTRIBUTOR	2E03
RTC	3283	CONTACT POINTS	2E03
RTC	3284	BRUSH SET FOR ALTERNATOR	2E10
RTC	3284	BRUSH SET-ALTERNATOR	2E12
RTC	3284	BRUSH SET-ALTERNATOR	2E14
RTC	3284	BRUSH SET-ALTERNATOR	2E16
RTC	3288	CONTACT POINTS	2E03
RTC	3295	CAP-DISTRIBUTOR	2E03
RTC	3306	GASKET KIT-ENGINE OVERHAUL	1F12
RTC	3308	CYLINDER HEAD GASKET	1D12
RTC	3326	JOINT WASHER	1D13
RTC	3333	DECARBONISING GASKET SET	1D03
RTC	3333	GASKET SET-DECARBONISING	2L07
RTC	3335	GASKET SET DECARBONISING	1C02
RTC	3335	GASKET-SET-DECARBONISING	2L07
RTC	3336	DECARBONISING GASKET SET	1E02
RTC	3336	GASKET SET-DECARBONISING	2L07
RTC	3337	GASKET KIT-ENGINE DECARB	1F12
RTC	3346	UNIVERSAL JOINT-PROP SHAFT	1J02
RTC	3346	JOINT UNIVERSAL PROP SHAFT	1J03
RTC	3346	UNIVERSAL JOINT(SINGLE)	1J04
RTC	3346	JOINT-UNIVERSAL PROP SHAFT	1J14
RTC	3347	HYLOMAR TUBE 4OZ TUBE	2L07
RTC	3353	HOSE-BRAKE REAR 109	1L09
RTC	3353	BRAKE HOSE	1L12
RTC	3368	WINDTONE HORN	2F09
RTC	3386	HOSE-BRAKE REAR 88	1L09

PART NUMBER		DESCRIPTION	REF.NO.
RTC	3397	PINION	1I11
RTC	3404	BRAKE SHOE ASSY	1L05
RTC	3405	BRAKE SHOE-TRANSMISSION BRAKE	1L05
RTC	3406	BEARING-BALL	1I11
RTC	3411	BRAKE SHOE	1L02
RTC	3411	BRAKE SHOES SET	1L04
RTC	3413	BEARING-ROLLER-LAYSHAFT	1I09
RTC	3415	BEARING	1H07
RTC	3416	HUB BEARING	1J10
RTC	3416	BEARING-REAR HUB	1J13
RTC	3417	BRAKE SHOE	1L03
RTC	3418	BRAKE SHOES SET	1L04
RTC	3424	BRAKE SHOE	1L03
RTC	3426	HUB BEARING	1J10
RTC	3426	BEARING-REAR HUB	1J13
RTC	3429	HUB BEARING	1J10
RTC	3429	HUB BEARING	1J11
RTC	3429	BEARING-REAR HUB	1J13
RTC	3433	IGNITION COIL	2F09
RTC	3471	CONDENSOR	2E03
RTC	3471	CONDENSER-DISTRIBUTOR	2E04
RTC	3472	CONDENSER	2E02
RTC	3472	CONDENSER-DISTRIBUTOR	2E04
RTC	3472	CONDENSER-DISTRIBUTOR	2E05
RTC	3472	CONDENSER-DISTRIBUTOR	2E06
RTC	3472	CONDENSER	2L17
RTC	3473	CONDENSER-DISTRIBUTOR	2E03
RTC	3474	CONDENSER	2E03
RTC	3474	CONDENSOR	2E03
RTC	3479	ELEMENT	1N04
RTC	3495	CABLE-SPEEDOMETER DRIVE	2F08
RTC	3497	HOSE CLIP	1D14
RTC	3497	CLIP-HOSE TO CHECK VALVE	2L17
RTC	3499	CLIP HOSE	1M12
RTC	3502	HOSE CLIP-AIR CLEANER CONNECT	1N02
RTC	3510	SEAL-OIL-FRONT HUB	1J10
RTC	3510	SEAL-OIL-REAR HUB	1J13
RTC	3511	SEAL-OIL-FRONT HUB	1J10
RTC	3511	OIL SEAL,FRONT HUB	1J11
RTC	3511	SEAL-OIL-REAR HUB	1J13
RTC	3515	OIL SEAL FOR HUB ASSEMBLIES	1J10
RTC	3516	SEAL FOR FRONT HUB ASSEMBLY	1J10
RTC	3516	OIL SEAL	1J11
RTC	3516	SEAL-AXLE SHAFT	1J13
RTC	3518	HOSE CLIP FOR AIR CLEANER	1N02

PART NUMBER		DESCRIPTION	REF.NO.
RTC 3518		HOSE CLIP	1N03
RTC 3518		CLIP	1N04
RTC 3518		HOSE CLIP	1N15
RTC 3519		CLIP FOR SEAL	1N04
RTC 3528		OIL SEAL FOR BEARING HOUSING	1J05
RTC 3534		HUB BEARING AND OIL SEAL KIT	1J10
RTC 3534		KIT-HUB BEARING AND OIL SEAL	1J13
RTC 3537		HUB BEARING AND OIL SEAL KIT	1J10
RTC 3537		HUB BEARING AND OIL SEAL KIT	1J11
RTC 3537		HUB BEARING AND OIL SEAL KIT	1J13
RTC 3562		RELAY	2F09
RTC 3569		PLUG-SPARKING	2E02
RTC 3569		PLUG-SPARKING	2E03
RTC 3570		PLUG-SPARKING	2E02
RTC 3570		PLUG-SPARKING	2E03
RTC 3570		PLUG-SPARKING	2E06
RTC 3571		PLUG-SPARKING	2E04
RTC 3571		PLUG-SPARKING	2E05
RTC 3609		CAP	2D04
RTC 3610		FILLER CAP FOR RADIATOR 9LB	2D02
RTC 3612		ROTOR ARM	2E02
RTC 3613		ROTOR ARM	2E06
RTC 3614		ROTOR ARM	2E03
RTC 3615		ROTOR ARM	2E04
RTC 3615		ROTOR ARM	2E05
RTC 3615		ROTOR ARM	2L17
RTC 3616		ROTOR ARM-DISTRIBUTOR	2E03
RTC 3637	N	ENGINE ASSEMBLY-STRIPPED	1F02
RTC 3650		TUBING	2F15
RTC 3660		PUMP-WATER	1F11
RTC 3661		WATER PUMP	1F10
RTC 3681		LIGHT UNIT	2F02
RTC 3682		LIGHT UNIT	2F02
RTC 3683		LIGHT UNIT	2F02
RTC 3684		LIGHT UNIT	2F02
RTC 3690		UNIVERSAL JOINT	1J05
RTC 3723		SPIRE NUT	2H17
RTC 3725		NUT	1M13
RTC 3725		SPECIAL NUT	2F09
RTC 3744		LOCKUT NUT	2F07
RTC 3744		LOKUT NUT	2G05
RTC 3744		LOCKUT NUT	2G10
RTC 3744		LOCKUT NUT	2G11
RTC 3744		NUTSERT	2J02
RTC 3745		LOCKUT NUT	1O14

PART NUMBER			DESCRIPTION	REF.NO.
RTC	3745		LOKUT NUT	2F13
RTC	3745		LOKUT NUT	2G05
RTC	3745		LOKUT NUT	2G09
RTC	3745		LOKUT NUT	2G11
RTC	3745		NUTSERT	2J02
RTC	3745		LOKUT NUT	2J03
RTC	3745		LOKUT NUT	2L12
RTC	3748		LOKUT NUT	2J02
RTC	3748		SPECIAL NUT	2J03
RTC	3750		DRIVE FASTENER	2G09
RTC	3750		RETAINER PARCEL TRAY	2J03
RTC	3750		PLUG-RETAINING	2L09
RTC	3751		CLIP-TRIM	2K02
RTC	3751		CLIP-TRIM	2K03
RTC	3755		PLASTIC RIVET	2J09
RTC	3755		PLASTIC RIVET	2J12
RTC	3755		PLASTIC RIVET	2J13
RTC	3764		CLIP-RETAINING ROOF TRIM	2J07
RTC	3764		CLIP-TRIM RETAINING	2J08
RTC	3764		CLIP-TRIM RETAINING	2J09
RTC	3764		CLIP-TRIM RETAINING	2J11
RTC	3764		CLIP-TRIM RETAINING	2J13
RTC	3773	N	ENGINE ASSEMBLY-2.25 DIESEL	1E02
RTC	3773	R	ENGINE ASSEMBLY-2.25 DIESEL	1E02
RTC	3779	N	ENGINE ASSEMBLY 2.25 PETROL	1C02
RTC	3779	R	ENGINE ASSEMBLY 2.25 PETROL	1C02
RTC	3780	N	ENGINE ASSEMBLY 2.25 PETROL	1C02
RTC	3780	R	ENGINE ASSEMBLY 2.25 PETROL	1C02
RTC	3790		BATTERY	2F12
RTC	3792		FRICTION BUSH-MOTIF	2G05
RTC	3792		BADGE FIX	2H13
RTC	3813		DISTRIBUTOR CAP	2E04
RTC	3845		ALTERNATOR COMPLETE	2E10
RTC	3845		ALTERNATOR ASSEMBLY	2E12
RTC	3845		ALTERNATOR ASSEMBLY	2E14
RTC	3847		ALTERNATOR COMPLETE	2E10
RTC	3847		ALTERNATOR	2E12
RTC	3847		ALTERNATOR ASSEMBLY	2E14
RTC	3851		ALTERNATOR ASSEMBLY	2E16
RTC	3854		STARTER MOTOR ASSEMBLY	2E07
RTC	3854		STARTER MOTOR ASSEMBLY	2E08
RTC	3857		STARTER MOTOR ASSEMBLY	2E09
RTC	3860		STARTER MOTOR COMPLETE	2E09
RTC	3867		WINDSCREEN WIPER MOTOR	2F06
RTC	3875		DISTRIBUTOR ASSEMBLY	2E03

PART NUMBER			DESCRIPTION	REF.NO.
RTC	3894		WIPER BLADE	2F06
RTC.	3943		BOLT 0.25 UNF X 1"	2H16
RTC	3943		BOLT	2I02
RTC	3966		REGULATOR FOR ALTERNATOR	2E10
RTC	3966		REGULATOR-ALTERNATOR	2E12
RTC	3966		REGULATOR-ALTERNATOR	2E14
RTC	3973		FIBRE WASHER	1N05
RTC	3977		SENSOR KIT	1N05
RTC	3978		HOSE	1N05
RTC	3979		HOSE	1N05
RTC	4032	A	AEROSOL PAINT MASAI RED	2L10
RTC	4032	T	TOUCH UP PAINT MASAI RED	2L10
RTC	4039	A	AEROSOL PAINT JAVA GREEN	2L10
RTC	4041	A	AEROSOL PAINT PASTEL GREEN	2L10
RTC	4042	A	AEROSOL PAINT BRONZE GREEN	2L10
RTC	4043	A	AEROSOL PAINT MARINE BLUE	2L10
RTC	4044	A	AEROSOL PAINT LIMESTONE	2L10
RTC	4045	A	AEROSOL PAINT GREY	2L10
RTC	4055	A	AEROSOL WHITE PRIMER	2L10
RTC	4056	A	AEROSOL GREY PRIMER	2L10
RTC	4057	A	AEROSOL RED OXIDE PRIMER	2L10
RTC	4102		RETAINING ROD ASSY	2J14
RTC	4183		LENS-FOG LAMP	2F05
RTC	4184		LENS-REVERSE LAMP	2F05
RTC	4185		SCREW	2F05
RTC	4188	S	PISTON ASSY STD 8:1 CR	1C03
RTC	4188	20	PISTON ASSY 020 O/S 8:1 CR	1C03
RTC	4188	40	PISTON ASSY 040 O/S 8:1 CR	1C03
RTC	4230		SHOCK ABSORBER	1J16
RTC	4231		SHOCK ABSORBER	1J16
RTC	4232		SHOCK ABSORBER	1J16
RTC	4233		SHOCK ABSORBER	1J16
RTC	4252		RECTIFIER FOR ALTERNATOR	2E10
RTC	4252		RECTIFIER-ALTERNATOR	2E12
RTC	4252		RECTIFIER-ALTERNATOR	2E14
RTC	4252		RECTIFIER-ALTERNATOR	2E16
RTC	4442		SHOCK ABSORBER	1J16
RTC	4483		SHOCK ABSORBER	1J16
RTC	4486		DIFFERENTIAL GEAR KIT	1J08
RTC	4488		DIFFERENTIAL GEAR KIT	1J09
RTC	4488		DIFFERENTIAL GEAR KIT	1J13
RTC	4489		DIFFERENTIAL GEAR KIT	1J08
RTC	4510		FUSE	2F09
RTC	4609		RECTIFIER FOR ALTERNATOR	2E10
RTC	4609		RECTIFIER-ALTERNATOR	2E12

PART NUMBER		DESCRIPTION	REF.NO.
RTC 4609		RECTIFIER-ALTERNATOR	2E14
RTC 7275		DOOR ASSEMBLY(EXCEPT 109 V8)	2H18
RTC 8050		MUDFLAP KIT	2H14
RU 608123	L	RIVET	2G12
RU 608253	L	POP RIVET	2J14
RU 612183		RIVET	2H02
RU 612183		RIVET	2H05
RU 612183		RIVET	2H07
RU 612183		RIVET	2H09
RU 612183		POP RIVET	2H11
RU 612183		POP RIVET	2H12
RU 612183		RIVET	2H14
RU 612183		RIVET	2L11
RU 612253		RIVET	2G09
RU 612253		POP RIVET	2G13
RU 612253		POP-RIVET	2G14
RU 612253		RIVET	2H05
RU 612253		POP RIVET	2H11
RU 612253		RIVET	2H17
RU 612253		POP RIVET	2K04
RU 612253		RIVET	2K05
RU 612253	L	POP RIVET	2G08
RU 612253	L	RIVET	2H14
RU 612373	L	POP RIVET	2I04
RU 612373	L	POP RIVET	2I04
RU 612373	L	POP RIVET	2J13
RU 612373	L	POP RIVET	2K07
RU 612503		POP RIVET	2H12
SA 106201		SCREW	2J11
SA 106201		SCREW	2J13
SA 106201		SCREW	2J14
SA 106201	L	SCREW	2J10
SA 106451		SETSCREW	2L04
SA 604061		SCREW	2J11
SE 104121	L	SCREW	2H13
SE 105141	L	SCREW	2G05
SE 105161	L	SCREW	2G06
SE 105161	L	SCREW	2H17
SE 105251	L	SCREW	2K07
SE 106161	L	SCREW	2F06
SE 106161	L	SCREW	2G15
SE 106161	L	SCREW	2H04
SE 106161	L	SCREW	2H12
SE 106161	L	SCREW	2H18
SE 106161	L	SCREW	2I04

PART NUMBER		DESCRIPTION	REF.NO.
SE 106161	L	SCREW	2K05
SE 106164		SCREW	2K07
SE 106201	L	BOLT	1N09
SE 106201	L	SCREW	2G10
SE 106201	L	SCREW	2G11
SE 106201	L	SCREW	2K07
SE 106204		SCREW	2K02
SE 106204		SCREW	2K03
SE 106204		SCREW	2K07
SE 106204		BOLT	2K08
SE 106351	L	SCREW	2K05
SE 106351	L	SCREW	2L05
SE 108164		SCREW	2K03
SE 108164		SCREW	2K04
SE 108204		SCREW	2K03
SE 108204		SCREW	2K04
SE 108254		SCREW	2K02
SE 108254		SCREW	2K03
SE 108254		SCREW	2K04
SE 604051	L	SCREW	2F06
SE 910321		SCREW	2K02
SF 106161	L	DRIVE SCREW	2G06
SF 108201		SCREW-TRANSMISSION BRAKE	1L05
SF 108201	L	SCREW	1I10
SF 108251		SCREW	2H13
SH 104121	L	BOLT	1E09
SH 105101	L	SCREW	1L12
SH 105121	L	BOLT	1O13
SH 105161	L	BOLT	2D04
SH 106101	L	BOLT	1G05
SH 106121	L	BOLT	1C04
SH 106121	L	BOLT	1E05
SH 106121	L	BOLT	1I13
SH 106121	L	BOLT	1L16
SH 106121	L	SCREW	1N12
SH 106121	L	SCREW	1O07
SH 106121	L	SCREW	1O11
SH 106124		SCREW	2K07
SH 106124		BOLT	2K08
SH 106141	L	BOLT	2G02
SH 106141	L	BOLT	2G04
SH 106141	L	SCREW	2H11
SH 106141	L	BOLT	2L17
SH 106161	L	BOLT	1O13
SH 106161	L	BOLT	1C05

PART NUMBER		DESCRIPTION	REF.NO.
SH 106161	L	BOLT	1E05
SH 106161	L	BOLT	1I03
SH 106161	L	BOLT	1L07
SH 106161	L	SCREW	1L10
SH 106161	L	SCREW	1L11
SH 106161	L	SCREW	1N11
SH 106161	L	BOLT	1N13
SH 106161	L	BOLT	1N13
SH 106161	L	SCREW	1007
SH 106161	L	SCREW	1011
SH 106161	L	SCREW	2D02
SH 106161	L	BOLT	2E03
SH 106161	L	SCREW	2F09
SH 106161	L	SCREW	2G02
SH 106161	L	SCREW	2G04
SH 106161	L	SCREW	2G06
SH 106161	L	SCREW	2G07
SH 106161	L	BOLT	2G08
SH 106161	L	SCREW	2G10
SH 106161	L	SCREW	2G11
SH 106161	L	SCREW	2G13
SH 106161	L	SCREW	2G15
SH 106161	L	SCREW	2H02
SH 106161	L	SCREW	2H03
SH 106161	L	SCREW	2H04
SH 106161	L	SCREW	2H05
SH 106161	L	SCREW	2H06
SH 106161	L	SCREW	2H07
SH 106161	L	SCREW	2H08
SH 106161	L	SCREW	2H14
SH 106161	L	SCREW	2H15
SH 106161	L	SCREW	2K06
SH 106161	L	BOLT	2L14
SH 106161	L	SCREW	2L15
SH 106161	L	SCREW	2L16
SH 106201	L	BOLT	1013
SH 106201	L	SCREW	1007
SH 106201	L	SCREW	1011
SH 106201	L	BOLT	2D04
SH 106201	L	SCREW	2F09
SH 106201	L	SCREW	2F12
SH 106201	L	SCREW	2G02
SH 106201	L	SCREW	2G04
SH 106201	L	SCREW	2G06
SH 106201	L	SCREW	2G07

PART NUMBER		DESCRIPTION	REF.NO.
SH 106201	L	SCREW	2G08
SH 106201	L	SCREW	2G12
SH 106201	L	SCREW	2G13
SH 106201	L	SCREW	2G16
SH 106201	L	SCREW	2H02
SH 106201	L	SCREW	2H08
SH 106201	L	SCREW	2H11
SH 106201	L	SCREW	2H13
SH 106201	L	SCREW	2H15
SH 106201	L	SCREW	2H17
SH 106201	L	BOLT	2J09
SH 106201	L	SETSCREW	2J11
SH 106201	L	SETSCREW	2J13
SH 106201	L	SCREW	2J16
SH 106201	L	SETSCREW	2L04
SH 106204		SCREW	2J08
SH 106204		SCREW	2K04
SH 106204		SCREW	2K05
SH 106251	L	BOLT	1I03
SH 106251	L	SCREW	2C03
SH 106251	L	SCREW	2C05
SH 106251	L	SCREW	2C08
SH 106251	L	SCREW	2D02
SH 106251	L	SCREW	2G15
SH 106251	L	SCREW	2H02
SH 106251	L	SCREW	2H13
SH 106251	L	SCREW	2I15
SH 106251	L	SCREW	2J16
SH 106301	L	SCREW	2C06
SH 106301	L	SCREW	2C08
SH 106351	L	BOLT	1I09
SH 106451	L	BOLT	1I03
SH 108061	L	BOLT	2G08
SH 108161	L	SCREW	1E09
SH 108161	L	SCREW	2H15
SH 108201	L	SCREW	1C04
SH 108201	L	SCREW	1C08
SH 108201	L	SCREW	1E04
SH 108201	L	BOLT	1I10
SH 108201	L	BOLT	2D03
SH 108201	L	BOLT	2E03
SH 108201	L	BOLT	2G05
SH 108201	L	BOLT	2H09
SH 108201	L	SETSCREW	2H10
SH 108251	L	BOLT	1C04

PART NUMBER		DESCRIPTION	REF.NO.
SH 108251	L	BOLT	1C07
SH 108251	L	BOLT	1C08
SH 108251	L	BOLT	1C11
SH 108251	L	BOLT	1E04
SH 108251	L	BOLT	1E07
SH 108251	L	BOLT	1E09
SH 108251	L	BOLT	1E11
SH 108251	L	BOLT	1I04
SH 108251	L	BOLT	1I05
SH 108251	L	BOLT	1I10
SH 108251	L	BOLT	1I12
SH 108251	L	BOLT	1K08
SH 108251	L	BOLT	1L05
SH 108251	L	SCREW	2C03
SH 108251	L	SCREW	2C05
SH 108251	L	SCREW	2C06
SH 108251	L	SCREW	2C08
SH 108251	L	BOLT	2C11
SH 108251	L	BOLT	2D04
SH 108251	L	BOLT	2E02
SH 108251	L	BOLT	2E11
SH 108251	L	SETSCREW M8 X 20 MM	2E13
SH 108251	L	BOLT	2E15
SH 108251	L	SETSCREW	2H13
SH 108251	L	SCREW	2I15
SH 108251	L	SETSCREW	2J16
SH 108251	L	SETSCREW	2L04
SH 108301	L	BOLT	1C13
SH 108301	L	BOLT	1I12
SH 108301	L	BOLT	2E11
SH 108301	L	BOLT	2E15
SH 108301	L	SETSCREW	2H14
SH 108351	L	BOLT	2E16
SH 108451		BOLT	1L16
SH 108701	L	BOLT	2C11
SH 110201	L	BOLT	1L05
SH 110201	L	SCREW	2G05
SH 110251	L	BOLT	2H09
SH 110251	L	SETSCREW	2L03
SH 110301	L	SET BOLT	1C12
SH 110301	L	BOLT	1E12
SH 110301	L	BOLT	1G02
SH 110301	L	BOLT	1G03
SH 110301	L	BOLT	2E09
SH 110301	L	SCREW	2G04

PART NUMBER		DESCRIPTION	REF.NO.
SH 110351	L	BOLT	1I04
SH 110401	L	BOLT	2G12
SH 112251	L	BOLT	1C02
SH 112251	L	BOLT	1E02
SH 112251	L	BOLT	1I05
SH 112251	L	BOLT	1I05
SH 112251	L	BOLT	1I05
SH 112301	L	BOLT	1C02
SH 112301	L	BOLT	1E02
SH 404081		BOLT	1J05
SH 504041	L	BOLT	1F07
SH 504051	L	BOLT	1M09
SH 504051	L	SCREW	1M12
SH 504061	L	BOLT	1F06
SH 504081	L	BOLT	1C10
SH 504081	L	BOLT	1E09
SH 505041	L	BOLT	1I03
SH 505051	L	BOLT	2C02
SH 505061	L	BOLT	1C14
SH 505061	L	BOLT(0.3125"UNC X 0.75")	1D12
SH 505061	L	BOLT	1F11
SH 505071	L	BOLT	1D08
SH 505071	L	BOLT	1F07
SH 505071	L	BOLT	2C02
SH 505081	L	BOLT	2L12
SH 505101	L	BOLT	1F04
SH 506071	L	SET BOLT(0.375"UNC X 0.75")	1D12
SH 506071	L	BOLT	1F09
SH 506071	L	BOLT	1F10
SH 506081	L	BOLT	1F03
SH 506091	L	BOLT	1F08
SH 506121	L	BOLT	2E06
SH 507071	L	BOLT	1F02
SH 507101	L	BOLT	1D13
SH 507101	L	BOLT	2E09
SH 604041	L	BOLT	1C04
SH 604041	L	BOLT	1F10
SH 604047		SCREW	2F07
SH 604051	L	BOLT (0.25" UNF X 0.625")	1C05
SH 604051	L	BOLT	1E05
SH 604061	L	SETSCREW	2J11
SH 604071	L	BOLT (0.25" UNF X 0.875")	1C03
SH 604071	L	BOLT	1D04
SH 604071	L	BOLT	1E03
SH 604071	L	BOLT	1K03

PART NUMBER		DESCRIPTION	REF.NO.
SH 604071	L	BOLT	2C03
SH 604071	L	BOLT	2C07
SH 604071	L	BOLT	2C08
SH 604071	L	BOLT	2C10
SH 604071	L	BOLT	2D02
SH 604071	L	BOLT	2G08
SH 604071	L	BOLT	2I15
SH 604071	L	BOLT	2J16
SH 604071	L	BOLT	2K06
SH 604071	L	BOLT	2L13
SH 604081	L	BOLT	1K04
SH 604081	L	BOLT	2C03
SH 604081	L	BOLT	2C04
SH 604081	L	BOLT	2C05
SH 604081	L	BOLT	2C07
SH 604081	L	BOLT	2C08
SH 604081	L	BOLT	2C10
SH 604081	L	BOLT	2H02
SH 604081	L	BOLT	2H18
SH 604081	L	BOLT	2L12
SH 604101	L	BOLT(0.250"UNF X 1.125")	2C04
SH 604101	L	BOLT	2C06
SH 604101	L	BOLT	2C07
SH 604101	L	BOLT	2C08
SH 605041	L	BOLT	1L03
SH 605051	L	SCREW	1F09
SH 605051	L	SCREW	1L06
SH 605051	L	BOLT	2H15
SH 605051	L	BOLT	2K02
SH 605051	L	BOLT	2K03
SH 605051	L	SETSCREW	2K04
SH 605051	L	BOLT	2L13
SH 605051	L	BOLT	2L14
SH 605051	L	BOLT	2L15
SH 605061	L	BOLT	1C08
SH 605061	L	BOLT	1C09
SH 605061	L	BOLT 0.3125" UNF X 0.75" LONG	1C11
SH 605061	L	BOLT	1D09
SH 605061	L	BOLT	1D14
SH 605061	L	BOLT	1E09
SH 605061	L	BOLT	1E11
SH 605061	L	BOLT	1E11
SH 605061	L	BOLT	1K03
SH 605061	L	BOLT	1L09
SH 605061	L	BOLT	1O02

PART NUMBER		DESCRIPTION	REF.NO.
SH 605061	L	BOLT	2C02
SH 605061	L	BOLT	2F12
SH 605061	L	BOLT	2G02
SH 605061	L	BOLT	2G13
SH 605061	L	BOLT	2G17
SH 605061	L	BOLT	2H05
SH 605061	L	BOLT	2K03
SH 605061	L	SETSCREW	2K04
SH 605061	L	BOLT	2L17
SH 605071	L	SET BOLT(0.3125"UNF X 0.875")	1C04
SH 605071	L	BOLT	1C07
SH 605071	L	BOLT	1E04
SH 605071	L	BOLT	1E07
SH 605071	L	BOLT	2H04
SH 605081	L	BOLT	1C04
SH 605081	L	BOLT	1C08
SH 605081	L	BOLT	1C10
SH 605081	L	BOLT	1E04
SH 605081	L	BOLT	1E09
SH 605081	L	BOLT	1E10
SH 605081	L	BOLT	2C03
SH 605081	L	BOLT	2C04
SH 605081	L	BOLT	2C05
SH 605081	L	BOLT	2C06
SH 605081	L	BOLT	2C07
SH 605081	L	BOLT	2C08
SH 605081	L	BOLT	2C10
SH 605081	L	BOLT	2E13
SH 605081	L	BOLT	2H08
SH 605091	L	SET BOLT(0.3125"UNF X 1.125")	1C13
SH 605101	L	BOLT	1013
SH 605101	L	BOLT	1L07
SH 605101	L	BOLT	1L14
SH 605101	L	BOLT	1N10
SH 605101	L	BOLT	1007
SH 605101	L	BOLT	1009
SH 605101	L	BOLT	1011
SH 605101	L	BOLT	2E11
SH 605101	L	BOLT	2E13
SH 605101	L	BOLT	2E15
SH 605101	L	BOLT	2I02
SH 605101	L	BOLT	2L12
SH 606061	L	SCREW	1G03
SH 606071	L	BOLT (0.375" UNF X 0.875")	1C05
SH 606071	L	BOLT	1D06

PART NUMBER		DESCRIPTION	REF.NO.
SH 606071	L	BOLT	1E05
SH 606071	L	BOLT	1K07
SH 606071	L	BOLT	1L14
SH 606071	L	BOLT	1L15
SH 606081	L	BOLT	1C14
SH 606081	L	BOLT	1D15
SH 606081	L	BOLT	1E13
SH 606081	L	BOLT	1N11
SH 606081	L	BOLT	1N12
SH 606081	L	BOLT	1N13
SH 606081	L	BOLT	1N13
SH 606081	L	BOLT (0.375" UNF X 1")	2G02
SH 606081	L	BOLT	2I02
SH 606081	L	SETSCREW	2L03
SH 606091	L	BOLT	1G03
SH 606121	L	BOLT 0.375"UNF X 1.375"	1C14
SH 606121	L	BOLT	1D15
SH 606141	L	BOLT(0.375" UNF X 1.75")	1L14
SH 607081	L	BOLT	1G03
SH 607081	L	BOLT (0.437" UNF X 1.0")	1O08
SH 607101	L	SET BOLT	1C12
SH 607101	L	BOLT	1E12
SH 607101	L	BOLT	1E12
SH 607101	L	SET SCREW 0.4375 UNF X 1.25"	1H05
SH 607121	L	LOCK STP BOLT 0.4375UNF X 1.5	1K04
SH 608071	L	BOLT	1D03
SH 608081	L	BOLT 1" LONG	1C02
SH 608081	L	BOLT 1" LONG	1E02
SH 608091	L	BOLT 1.125" LONG	1C02
SH 608091	L	BOLT 1.1250" LONG	1E02
SP 104121		SCREW	2H03
SP 104121		SCREW	2H06
SP 108161	L	BOLT	1I12
SP 910447	L	SCREW NO 10 X 1.375 LONG	1O14
SS 506121	L	BOLT-SPECIAL	2E09
SX 108201	L	BOLT	1G02
SX 108201	L	BOLT	1G03
SX 110251		SETSCREW	2H10
TD 108091	L	BOLT	1E06
TE 106041	L	STUD	1G03
TE 108041	L	STUD	1C07
TE 108041	L	STUD	1C08
TE 108041	L	STUD	1E07
TE 108041	L	STUD	1E09
TE 108051	L	STUD	1C04

PART NUMBER		DESCRIPTION	REF.NO.
TE 108051	L	STUD	1C11
TE 108051	L	STUD	1E05
TE 108051	L	STUD	1E11
TE 108061	L	STUD	1E02
TE 108071	L	STUD	1E11
TE 108111	L	STUD	1C06
TE 110061	L	STUD	1G02
TE 110061	L	STUD	1G03
TE 112115	L	STUD	1I04
TE 116155	L	STUD	1I04
TE 505105	L	STUD	1M11
TE 605101	L	STUD	1C07
TE 605101	L	STUD	1E07
TE 605211	L	STUD	1C06
TE 606231		STUD MANIFOLD AND EXHAUST	2L17
TE 606231	L	STUD	1D03
TKC 1331	L	ABSORPTION CANISTER	2K14
TKC 1331	L	CANNISTER-ABSORPTION	2L15
TKC 3320		E.G.R. VALVE	1F08
TRS 1013	L	'O' RING	1E11
TRS 1013	L	BUSH-TRANSFER SHAFT	1H13
TRS 1114	L	'O' RING	1E11
TRS 1114	L	SEAL	1H11
UFS 1254	RL	SCREW	2G12
UKC 2643	L	CHECK VALVE	1D14
UKC 2643	L	CHECK VALVE-AIR MANIFOLD	2L17
UKC 3741	L	SOLENOID THROTTLE JACK	1M07
UKC 3741	L	SOLENOID	2L17
UKC 3794	L	CLIP	2K14
UKC 3794	L	CLIP	2L15
UKC 8137	L	COLLETT-VALVE SPRING	1F05
UKC 8677	L	CYLINDER-CLUTCH SLAVE	1G05
URP 1090	L	EXPANSION TANK	2D04
URP 1208	L	WASHER	2D03
WA 103001	L	WASHER PLAIN	2H13
WA 104001	L	WASHER PLAIN	2H12
WA 104001	L	WASHER PLAIN	2H13
WA 104041	L	WASHER-PLAIN	1E09
WA 105001	L	WASHER PLAIN	2F05
WA 105001	L	PLAIN WASHER	2G05
WA 105001	L	PLAIN WASHER	2G06
WA 105001	L	WASHER-PLAIN	2H11
WA 105001	L	WASHER PLAIN	2H12
WA 105001	L	WASHER PLAIN	2H13
WA 105001	L	WASHER-PLAIN	2K07

PART NUMBER		DESCRIPTION	REF.NO.
WA 106004		WASHER-PLAIN	2K02
WA 106004		WASHER-PLAIN	2K03
WA 106041	L	WASHER-PLAIN	1F02
WA 106041	L	WASHER-PLAIN	1F06
WA 106041	L	WASHER-PLAIN	1G03
WA 106041	L	WASHER-PLAIN	1I11
WA 106041	L	WASHER	1M12
WA 106041	L	WASHER-PLAIN	1N09
WA 106041	L	WASHER-PLAIN	2C06
WA 106041	L	WASHER-PLAIN	2C08
WA 106041	L	WASHER PLAIN	2D04
WA 106041	L	PLAIN WASHER	2G04
WA 106041	L	WASHER-PLAIN	2G08
WA 106041	L	WASHER-PLAIN	2G16
WA 106041	L	WASHER PLAIN	2H11
WA 106041	L	WASHER PLAIN	2H12
WA 106041	L	WASHER PLAIN	2H14
WA 106041	L	WASHER-PLAIN	2J14
WA 106041	L	WASHER-PLAIN	2K04
WA 106041	L	WASHER PLAIN	2K05
WA 106041	L	WASHER-PLAIN	2K05
WA 106041	L	WASHER PLAIN	2L04
WA 106041	L	WASHER PLAIN	2L05
WA 106041	L	WASHER-PLAIN	2L15
WA 108041	L	WASHER PLAIN	2H13
WA 108051	L	PLAIN WASHER	1O13
WA 108051	L	WASHER	1C04
WA 108051	L	PLAIN WASHER	1C13
WA 108051	L	WASHER	1E04
WA 108051	L	WASHER-PLAIN	1E11
WA 108051	L	WASHER-PLAIN	1E13
WA 108051	L	WASHER-PLAIN	1F04
WA 108051	L	WASHER PLAIN	1F10
WA 108051	L	WASHER	1F11
WA 108051	L	WASHER	1I05
WA 108051	L	WASHER	1I12
WA 108051	L	PLAIN WASHER	1L16
WA 108051	L	WASHER	1M12
WA 108051	L	WASHER-PLAIN	1N10
WA 108051	L	WASHER-PLAIN	2E02
WA 108051	L	WASHER PLAIN	2E03
WA 108051	L	WASHER-PLAIN	2E16
WA 108051	L	PLAIN WASHER	2F12
WA 108051	L	PLAIN WASHER	2G05
WA 108051	L	WASHER-PLAIN	2G11

PART NUMBER		DESCRIPTION	REF.NO.
WA 108051	L	WASHER-PLAIN	2G16
WA 108051	L	WASHER PLAIN	2H09
WA 108051	L	WASHER PLAIN	2H10
WA 108051	L	WASHER PLAIN	2H13
WA 108051	L	WASHER PLAIN	2H14
WA 108051	L	WASHER PLAIN	2J16
WA 108051	L	WASHER PLAIN	2L04
WA 108054	L	WASHER-PLAIN	2K02
WA 108054	L	WASHER-PLAIN	2K03
WA 108054	L	WASHER-PLAIN	2K04
WA 110061	L	WASHER	1G02
WA 110061	L	WASHER-PLAIN	1G03
WA 110061	L	WASHER-PLAIN	1H02
WA 110061	L	WASHER	1I05
WA 110061	L	PLAIN WASHER	1N12
WA 110061	L	WASHER-PLAIN	2E09
WA 110061	L	PLAIN WASHER	2G02
WA 110061	L	WASHER-PLAIN	2G12
WA 110061	L	PLAIN WASHER	2H09
WA 110061	L	WASHER PLAIN	2H10
WA 110061	L	WASHER-PLAIN	2J10
WA 110061	L	WASHER PLAIN	2J11
WA 110061	L	WASHER-PLAIN	2J13
WA 110061	L	WASHER PLAIN	2L03
WA 116061	L	WASHER-PLAIN	2L03
WA 600071	L	WASHER	1O13
WA 600091	L	PLAIN WASHER	2H13
WA 702101	L	WASHER-SPRING	1F10
WA 702101	L	WASHER	1M12
WA 702101	L	WASHER-PLAIN	1N17
WA 702101	L	WASHER-PLAIN	2C09
WA 702101	L	PLAIN WASHER	2F15
WA 702101	L	WASHER-PLAIN	2G08
WA 702101	L	WASHER-PLAIN	2G17
WA 702101	L	PLAIN WASHER	2I03
WA 702101	L	WASHER-PLAIN	2J05
WA 702101	L	WASHER-PLAIN	2J06
WA 702101	L	WASHER-PLAIN	2L14
WA 702101	L	WASHER-PLAIN	2L15
WA 703081	L	PLAIN WASHER	2G14
WA 703081	L	WASHER-PLAIN	2G17
WA 703081	L	WASHER-PLAIN	2J06
WA 703081	L	WASHER-PLAIN	2J07
WA 703081	L	WASHER-PLAIN	2J08
WA 704061	L	WASHER	2J06

PART NUMBER		DESCRIPTION	REF.NO.
WA 705051		WASHER-PLAIN	2J06
WB 106041	L	PLAIN WASHER	1F10
WB 106041	L	WASHER PLAIN	1K03
WB 106041	L	WASHER-PLAIN	1K06
WB 106041	L	WASHER-PLAIN	1K07
WB 106041	L	WASHER	1K08
WB 106041	L	WASHER-PLAIN	1009
WB 106041	L	WASHER-PLAIN	1010
WB 106041	L	WASHER-PLAIN	1014
WB 106041	L	WASHER-PLAIN	2C09
WB 106041	L	PLAIN WASHER	2E02
WB 106041	L	WASHER PLAIN	2E03
WB 106041	L	WASHER-PLAIN	2E04
WB 106041	L	WASHER-PLAIN	2E05
WB 106041	L	PLAIN WASHER	2G06
WB 106041	L	WASHER-PLAIN	2G14
WB 106041	L	WASHER PLAIN	2J16
WB 106041	L	WASHER PLAIN	2K06
WB 108051	L	WASHER-PLAIN	1L07
WB 108051	L	PLAIN WASHER	2G08
WB 108051	L	WASHER-PLAIN	2G10
WB 108051	L	WASHER-PLAIN	2H06
WB 108051	L	PLAIN WASHER	2H09
WB 108051	L	WASHER-PLAIN	2L12
WB 110061	L	WASHER	1D12
WB 110061	L	WASHER	1D13
WB 110061	L	WASHER	1G02
WB 110061	L	WASHER-PLAIN	1H02
WB 110061	L	WASHER-PLAIN	1L14
WB 110061	L	WASHER	1L15
WB 110061	L	WASHER	1008
WB 110061	L	WASHER-PLAIN	1012
WB 110061	L	PLAIN WASHER	2C09
WB 110061	L	WASHER-PLAIN	2I02
WB 112081	L	PLAIN WASHER	2G09
WB 116101	L	PLAIN WASHER	1L14
WC 104001	L	WASHER PLAIN	2H03
WC 104001	L	WASHER-PLAIN	2H06
WC 105001	L	WASHER PLAIN	2D04
WC 105001	L	PLAIN WASHER	2G05
WC 105001	L	WASHER PLAIN	2H11
WC 106041	L	PLAIN WASHER	1013
WC 106041	L	WASHER-PLAIN	1I13
WC 106041	L	WASHER PLAIN	1N08
WC 106041	L	WASHER-PLAIN	1007

PART NUMBER		DESCRIPTION	REF.NO.
WC 106041	L	WASHER-PLAIN	1O11
WC 106041	L	WASHER PLAIN	2C11
WC 106041	L	WASHER-PLAIN	2G11
WC 106041	L	WASHER PLAIN	2H02
WC 106041	L	WASHER-PLAIN	2J09
WC 106041	L	WASHER PLAIN	2K06
WC 108051	L	WASHER-PLAIN	2G07
WC 108051	L	WASHER-PLAIN	2G18
WC 108051	L	WASHER-PLAIN	2H15
WC 108051	L	WASHER SPRING	2J16
WC 110061	L	PLAIN WASHER	1C14
WC 110061	L	WASHER-PLAIN	1D15
WC 110061	L	WASHER-PLAIN	1E13
WC 112081	L	PLAIN WASHER	1K06
WC 112081	L	WASHER-PLAIN	1K07
WC 112081	L	WASHER	1K08
WC 702101	L	WASHER PLAIN	1E09
WC 702101	L	PLAIN WASHER	1L07
WC 702101	L	WASHER-PLAIN	1N15
WC 702101	L	WASHER-PLAIN	2D02
WC 702101	L	PLAIN WASHER	2F13
WC 702101	L	PLAIN WASHER	2F15
WC 702101	L	WASHER-PLAIN	2G09
WC 702101	L	WASHER-PLAIN	2G10
WC 702101	L	WASHER-PLAIN	2G11
WC 702101	L	WASHER-PLAIN	2H02
WC 702101	L	WASHER-PLAIN	2H05
WC 702101	L	WASHER-PLAIN	2H07
WC 702101	L	WASHER PLAIN	2J03
WC 702101	L	WASHER PLAIN	2J11
WC 702101	L	WASHER-PLAIN	2J13
WC 702101	L	WASHER PLAIN	2K07
WC 702101	L	WASHER-PLAIN	2L13
WD 108057		WASHER-PLAIN	2F07
WD 110061	L	WASHER-PLAIN	1C14
WD 110061	L	WASHER-PLAIN	1D15
WD 110061	L	WASHER-PLAIN	1E13
WD 110061	L	WASHER-PLAIN	1F02
WD 110061	L	WASHER-PLAIN	1O05
WE 108001	L	WASHER	1E11
WE 108001	L	STARLOK-WASHER	2C03
WE 108001	L	WASHER-STARLOK	2C05
WE 108001	L	WASHER	2H02
WE 600041	L	SHAKEPROOF WASHER	1N08
WE 600041	L	SHAKEPROOF WASHER	1O12

PART NUMBER		DESCRIPTION	REF.NO.
WE 600041	L	WASHER-SHAKE PROOF	2F09
WE 600041	L	WASHER	2J13
WE 600051	L	WASHER-FAN DISC	1E11
WE 600071	L	WASHER-STAR LOCK	1H13
WE 702101	L	WASHER-FAN DISC	1E11
WE 702101	L	WASHER-SHAKEPROOF	2H17
WE 702101	L	WASHER-SHAKEPROOF	2J09
WE 702101	L	WASHER-SHAKEPROOF	2J11
WE 702101	L	WASHER-SHAKEPROOF	2J13
WE 703081		SHAKEPROOF WASHER	2F10
WE 703081		WASHER-SHAKEPROOF	2F11
WF 507	L	WASHER-PLAIN	1G04
WF 507	L	WASHER	1L06
WF 108001	L	WASHER-SHAKEPROOF	2J10
WF 108001	L	WASHER-SHAKEPROOF	2J11
WF 108001	L	WASHER	2J13
WF 110001	L	SHAKEPROOF WASHER	1L10
WF 110001	L	SHAKEPROOF WASHER	1L11
WF 110001	L	SHAKEPROOF WASHER	1L13
WF 116001	L	SHAKEPROOF WASHER	1L16
WF 600041	L	WASHER SHAKEPROOF	2J06
WF 600041	L	WASHER SHAKEPROOF	2J07
WF 600051	L	WASHER	1D07
WF 600051	L	WASHER-STAR LOCK	1H09
WF 600051	L	WASHER-STARLOK	2C03
WF 600051	L	WASHER-STARLOK	2C04
WF 600051	L	WASHER-SHAKEPROOF	2J10
WF 600051	L	WASHER	2J11
WF 600061	L	SHAKEPROOF WASHER	1H12
WF 600061	L	SHAKEPROOF WASHER	1L09
WF 600061	L	SHAKEPROOF WASHER	1L12
WF 605041	L	WASHER-SPRING	2C05
WL 104001	L	WASHER-SPRING	1E09
WL 105001	L	SPRING WASHER	1013
WL 105001	L	SPRING WASHER	1L12
WL 105001	L	WASHER SPRING	2D04
WL 105001	L	WASHER SPRING	2F05
WL 105001	L	WASHER-SPRING	2H17
WL 106001	L	SPRING WASHER	1013
WL 106001	L	WASHER-SPRING	1C10
WL 106001	L	WASHER-SPRING	1E10
WL 106001	L	WASHER-SPRING	1F02
WL 106001	L	WASHER SPRING	1G03
WL 106001	L	WASHER-SPRING	1I13
WL 106001	L	WASHER SPRING	1K03

PART NUMBER		DESCRIPTION	REF.NO.
WL 106001	L	WASHER-SPRING	1K04
WL 106001	L	WASHER-SPRING	1L07
WL 106001	L	WASHER SPRING	1L09
WL 106001	L	SPRING WASHER	1L10
WL 106001	L	SPRING WASHER	1L11
WL 106001	L	WASHER-SPRING	1L12
WL 106001	L	SPRING WASHER	1L13
WL 106001	L	SPRING WASHER	1L16
WL 106001	L	SPRING WASHER	1N09
WL 106001	L	WASHER SPRING	1N11
WL 106001	L	SPRING WASHER	1N12
WL 106001	L	WASHER-SPRING	1N13
WL 106001	L	WASHER-SPRING	1N13
WL 106001	L	WASHER-SPRING	1007
WL 106001	L	WASHER-SPRING	1011
WL 106001	L	WASHER-SPRING	2C03
WL 106001	L	WASHER-SPRING	2C05
WL 106001	L	WASHER-SPRING	2C08
WL 106001	L	WASHER SPRING	2C11
WL 106001	L	WASHER-SPRING	2D02
WL 106001	L	WASHER-SPRING	2E03
WL 106001	L	WASHER-SPRING	2F09
WL 106001	L	WASHER-SPRING	2F12
WL 106001	L	WASHER-SPRING	2G02
WL 106001	L	WASHER-SPRING	2G04
WL 106001	L	WASHER SPRING	2G06
WL 106001	L	WASHER-SPRING	2G07
WL 106001	L	SPRING WASHER	2G08
WL 106001	L	WASHER-SPRING	2G10
WL 106001	L	WASHER-SPRING	2G11
WL 106001	L	WASHER SPRING	2G12
WL 106001	L	WASHER SPRING	2G13
WL 106001	L	WASHER SPRING	2G15
WL 106001	L	WASHER-SPRING	2G16
WL 106001	L	WASHER PLAIN	2H02
WL 106001	L	WASHER-SPRING	2H03
WL 106001	L	WASHER-SPRING	2H04
WL 106001	L	WASHER SPRING	2H05
WL 106001	L	WASHER SPRING	2H06
WL 106001	L	WASHER-SPRING	2H07
WL 106001	L	WASHER-SPRING	2H08
WL 106001	L	WASHER-SPRING	2H11
WL 106001	L	WASHER SPRING	2H13
WL 106001	L	WASHER SPRING	2H14
WL 106001	L	WASHER SPRING	2H15

PART NUMBER		DESCRIPTION	REF.NO.
WL 106001	L	WASHER-SPRING	2H17
WL 106001	L	WASHER-SPRING	2H18
WL 106001	L	WASHER SPRING	2I02
WL 106001	L	WASHER SPRING	2I15
WL 106001	L	WASHER-SPRING	2J09
WL 106001	L	WASHER SPRING	2J10
WL 106001	L	WASHER SPRING	2J11
WL 106001	L	WASHER-SPRING	2J13
WL 106001	L	WASHER-SPRING	2J14
WL 106001	L	WASHER SPRING	2J16
WL 106001	L	WASHER-SPRING	2K04
WL 106001	L	WASHER-SPRING	2K05
WL 106001	L	WASHER SPRING	2K06
WL 106001	L	WASHER SPRING	2L04
WL 106001	L	WASHER-SPRING	2L14
WL 106001	L	WASHER-SPRING	2L15
WL 106001	L	WASHER-SPRING	2L16
WL 106001	L	WASHER SPRING	2L17
WL 106004	L	WASHER-SPRING	2J08
WL 106004	L	WASHER-SPRING	2K02
WL 106004	L	WASHER-SPRING	2K03
WL 106004	L	WASHER-SPRING	2K07
WL 106004	L	WASHER-SPRING	2K08
WL 106041	L	WASHER-SPRING	1O07
WL 106041	L	WASHER-SPRING	1O11
WL 106041	L	WASHER-SPRING	2G07
WL 106041	L	WASHER-SPRING	2K07
WL 108001	L	SPRING WASHER	1C04
WL 108001	L	WASHER-SPRING	1C06
WL 108001	L	WASHER SPRING	1C07
WL 108001	L	WASHER SPRING	1C08
WL 108001	L	WASHER SPRING	1C11
WL 108001	L	WASHER SPRING	1C13
WL 108001	L	WASHER SPRING	1E04
WL 108001	L	WASHER-SPRING	1E05
WL 108001	L	WASHER SPRING	1E06
WL 108001	L	WASHER SPRING	1E07
WL 108001	L	WASHER SPRING	1E08
WL 108001	L	WASHER-SPRING	1E09
WL 108001	L	WASHER SPRING	1E11
WL 108001	L	WASHER SPRING	1E13
WL 108001	L	WASHER-SPRING	1G02
WL 108001	L	WASHER-SPRING	1G03
WL 108001	L	WASHER-SPRING	1I05
WL 108001	L	SPRING WASHER	1L16

PART NUMBER		DESCRIPTION	REF.NO.
WL 108001	L	WASHER	1N10
WL 108001	L	WASHER-SPRING	2C03
WL 108001	L	WASHER-SPRING	2C05
WL 108001	L	WASHER-SPRING	2C06
WL 108001	L	WASHER-SPRING	2C08
WL 108001	L	WASHER SPRING	2C11
WL 108001	L	WASHER SPRING	2D04
WL 108001	L	WASHER-SPRING	2E02
WL 108001	L	WASHER SPRING	2E03
WL 108001	L	WASHER-SPRING	2E11
WL 108001	L	WASHER-SPRING	2E15
WL 108001	L	SPRING WASHER	2G05
WL 108001	L	WASHER-SPRING	2G18
WL 108001	L	SPRING WASHER	2H09
WL 108001	L	WASHER SPRING	2H14
WL 108001	L	WASHER-SPRING	2H15
WL 108001	L	WASHER-SPRING	2I15
WL 108001	L	WASHER SPRING	2J16
WL 108001	L	WASHER SPRING	2L04
WL 108001	L	SPRING WASHER	2L13
WL 108004		WASHER-SPRING	2K02
WL 108004		WASHER-SPRING	2K03
WL 108004		WASHER-SPRING	2K04
WL 110001	L	WASHER SPRING	1C12
WL 110001	L	SPRING WASHER	1C14
WL 110001	L	WASHER-SPRING	1D15
WL 110001	L	WASHER SPRING	1E12
WL 110001	L	WASHER-SPRING	1E13
WL 110001	L	WASHER-SPRING	1G02
WL 110001	L	WASHER SPRING	1G03
WL 110001	L	SPRING WASHER	1L08
WL 110001	L	WASHER SPRING	2E07
WL 110001	L	WASHER-SPRING	2E09
WL 110001	L	WASHER-SPRING	2G05
WL 110001	L	SPRING WASHER	2H09
WL 110001	L	WASHER-SPRING	2H10
WL 110001	L	WASHER SPRING	2L03
WL 112001	L	SPRING WASHER	1C02
WL 112001	L	WASHER SPRING	1E02
WL 112001	L	WASHER-SPRING	1I05
WL 112001	L	WASHER-SPRING	1I05
WL 600061	L	WASHER-SPRING	1I05
WL 700101	L	WASHER SPRING	1L13
WM 106001	L	WASHER-SPRING	1G05
WM 106001	L	WASHER-SPRING	1I03

PART NUMBER		DESCRIPTION	REF.NO.
WM 106001	L	SPRING WASHER	2G02
WM 106001	L	SPRING WASHER	2G04
WM 106001	L	WASHER-SPRING	2G06
WM 108001	L	WASHER-SPRING	1G05
WM 108001	L	WASHER-SPRING	1I03
WM 108001	L	WASHER-SPRING	1I04
WM 108001	L	SPRING WASHER	1I05
WM 108001	L	WASHER-SPRING	1I12
WM 108001	L	WASHER-SPRING	1L05
WM 108001	L	SPRING WASHER	2G08
WM 110001	L	WASHER-SPRING	1I04
WM 110001	L	WASHER-SPRING	1I11
WM 112001	L	WASHER-SPRING	1I02
WM 116001	L	WASHER-SPRING	1I02
WM 600041	L	SPRING WASHER	1C03
WM 600041	L	WASHER,SPRING	1C05
WM 600041	L	WASHER SPRING	1C08
WM 600041	L	WASHER-SPRING	1C10
WM 600041	L	WASHER SPRING	1D03
WM 600041	L	WASHER SPRING	1D04
WM 600041	L	WASHER-SPRING	1D06
WM 600041	L	WASHER-SPRING	1D09
WM 600041	L	WASHER-SPRING	1D10
WM 600041	L	WASHER-SPRING	1D11
WM 600041	L	SPRING WASHER	1D12
WM 600041	L	WASHER SPRING	1D14
WM 600041	L	WASHER-SPRING	1E03
WM 600041	L	WASHER-SPRING	1E05
WM 600041	L	WASHER-SPRING	1E09
WM 600041	L	WASHER-SPRING	1E10
WM 600041	L	WASHER-SPRING	1F03
WM 600041	L	WASHER-SPRING	1F04
WM 600041	L	WASHER-SPRING	1F06
WM 600041	L	SPRING WASHER	1F07
WM 600041	L	WASHER-SPRING	1F10
WM 600041	L	SPRING WASHER	1F11
WM 600041	L	WASHER-SPRING	1G03
WM 600041	L	WASHER-SPRING	1H02
WM 600041	L	WASHER-SPRING	1H03
WM 600041	L	WASHER-SPRING	1H09
WM 600041	L	WASHER-SPRING	1H10
WM 600041	L	WASHER-SPRING	1H11
WM 600041	L	WASHER-SPRING	1J05
WM 600041	L	WASHER SPRING	1K03
WM 600041	L	WASHER-SPRING	1K04

PART NUMBER		DESCRIPTION	REF.NO.
WM 600041	L	WASHER-SPRING	1K05
WM 600041	L	WASHER-SPRING	1L07
WM 600041	L	WASHER-SPRING	1L09
WM 600041	L	SPRING WASHER	1L12
WM 600041	L	WASHER-SPRING	1M04
WM 600041	L	WASHER SPRING	1M09
WM 600041	L	WASHER-SPRING	1N08
WM 600041	L	WASHER-SPRING	1N09
WM 600041	L	WASHER-SPRING	1N11
WM 600041	L	SPRING WASHER	1N12
WM 600041	L	WASHER-SPRING	1N13
WM 600041	L	WASHER-SPRING	1N13
WM 600041	L	WASHER-PLAIN	1007
WM 600041	L	WASHER-SPRING	1008
WM 600041	L	WASHER-SPRING	1009
WM 600041	L	WASHER-SPRING	1010
WM 600041	L	WASHER-SPRING	1011
WM 600041	L	WASHER-SPRING	2C03
WM 600041	L	WASHER-SPRING	2C04
WM 600041	L	WASHER-SPRING	2C05
WM 600041	L	WASHER-SPRING	2C07
WM 600041	L	WASHER-SPRING	2C08
WM 600041	L	WASHER-SPRING	2C09
WM 600041	L	WASHER-SPRING	2C10
WM 600041	L	WASHER-SPRING	2D02
WM 600041	L	WASHER-SPRING	2E02
WM 600041	L	WASHER SPRING	2E03
WM 600041	L	WASHER-SPRING	2E04
WM 600041	L	WASHER-SPRING	2E05
WM 600041	L	WASHER-SPRING	2F09
WM 600041	L	WASHER-SPRING	2F12
WM 600041	L	WASHER-SPRING	2G02
WM 600041	L	SPRING WASHER	2G04
WM 600041	L	WASHER-SPRING	2G05
WM 600041	L	SPRING WASHER	2G06
WM 600041	L	WASHER-SPRING	2G07
WM 600041	L	WASHER-SPRING	2G08
WM 600041	L	WASHER-SPRING	2G10
WM 600041	L	WASHER-SPRING	2G11
WM 600041	L	WASHER-SPRING	2G12
WM 600041	L	WASHER-SPRING	2G13
WM 600041	L	WASHER-SPRING	2G15
WM 600041	L	WASHER-SPRING	2G16
WM 600041	L	WASHER-SPRING	2G18
WM 600041	L	WASHER-SPRING	2H02

PART NUMBER		DESCRIPTION	REF.NO.
WM 600041	L	WASHER-SPRING	2H03
WM 600041	L	WASHER-SPRING	2H04
WM 600041	L	WASHER-SPRING	2H05
WM 600041	L	WASHER-SPRING	2H06
WM 600041	L	WASHER-SPRING	2H07
WM 600041	L	WASHER-SPRING	2H08
WM 600041	L	WASHER-SPRING	2H13
WM 600041	L	WASHER SPRING	2H14
WM 600041	L	WASHER-SPRING	2H15
WM 600041	L	SPRING WASHER	2H16
WM 600041	L	WASHER-SPRING	2H17
WM 600041	L	WASHER-SPRING	2H18
WM 600041	L	WASHER SPRING	2I02
WM 600041	L	WASHER-SPRING	2I15
WM 600041	L	WASHER-SPRING	2J09
WM 600041	L	WASHER-SPRING	2J10
WM 600041	L	WASHER-SPRING	2J11
WM 600041	L	WASHER-SPRING	2J16
WM 600041	L	WASHER-SPRING	2K02
WM 600041	L	WASHER-SPRING	2K03
WM 600041	L	WASHER-SPRING	2K04
WM 600041	L	WASHER-SPRING	2K05
WM 600041	L	WASHER-SPRING	2K06
WM 600041	L	WASHER-SPRING	2L13
WM 600041	L	SPRING WASHER FIXING HOSE	2L17
WM 600051	L	SPRING WASHER	1C04
WM 600051	L	WASHER-SPRING	1C06
WM 600051	L	WASHER-SPRING	1C07
WM 600051	L	WASHER,SPRING	1C08
WM 600051	L	SPRING WASHER	1C09
WM 600051	L	WASHER-SPRING	1C10
WM 600051	L	WASHER-SPRING	1C11
WM 600051	L	WASHER SPRING	1C13
WM 600051	L	WASHER SPRING	1C14
WM 600051	L	WASHER-SPRING	1D05
WM 600051	L	WASHER-SPRING	1D06
WM 600051	L	WASHER SPRING	1D08
WM 600051	L	WASHER SPRING	1D09
WM 600051	L	WASHER-SPRING	1D10
WM 600051	L	WASHER-SPRING	1D12
WM 600051	L	WASHER-SPRING	1D13
WM 600051	L	WASHER-SPRING	1D14
WM 600051	L	WASHER SPRING	1D15
WM 600051	L	WASHER-SPRING	1E04
WM 600051	L	WASHER-SPRING	1E05

PART NUMBER		DESCRIPTION	REF.NO.
WM 600051	L	WASHER-SPRING	1E06
WM 600051	L	WASHER-SPRING	1E07
WM 600051	L	WASHER-SPRING	1E08
WM 600051	L	WASHER-SPRING	1E09
WM 600051	L	WASHER SPRING	1E10
WM 600051	L	WASHER-SPRING	1E11
WM 600051	L	WASHER-SPRING	1E13
WM 600051	L	WASHER-SPRING	1F02
WM 600051	L	WASHER SPRING	1F07
WM 600051	L	SPRING WASHER	1F11
WM 600051	L	WASHER-SPRING	1G02
WM 600051	L	WASHER-SPRING	1G03
WM 600051	L	WASHER-SPRING	1G04
WM 600051	L	WASHER-SPRING	1H09
WM 600051	L	WASHER-SPRING	1H10
WM 600051	L	WASHER-SPRING	1H13
WM 600051	L	WASHER-SPRING	1K02
WM 600051	L	WASHER SPRING	1K03
WM 600051	L	WASHER-SPRING	1K04
WM 600051	L	WASHER-SPRING	1L02
WM 600051	L	WASHER-SPRING	1L03
WM 600051	L	WASHER-SPRING	1L04
WM 600051	L	WASHER-SPRING	1L06
WM 600051	L	WASHER-SPRING	1L07
WM 600051	L	SPRING WASHER	1L08
WM 600051	L	WASHER-SPRING	1L09
WM 600051	L	SPRING WASHER	1L14
WM 600051	L	WASHER-SPRING	1L15
WM 600051	L	WASHER-SPRING	1M04
WM 600051	L	WASHER-SPRING	1M05
WM 600051	L	WASHER SPRING	1M09
WM 600051	L	SPRING WASHER	1M11
WM 600051	L	WASHER-SPRING	1N07
WM 600051	L	WASHER-SPRING	1N10
WM 600051	L	WASHER-SPRING	1O02
WM 600051	L	WASHER-SPRING	1O10
WM 600051	L	WASHER-SPRING	2C02
WM 600051	L	WASHER-SPRING	2C03
WM 600051	L	WASHER-SPRING	2C04
WM 600051	L	WASHER-SPRING	2C05
WM 600051	L	WASHER-SPRING	2C06
WM 600051	L	WASHER-SPRING	2C07
WM 600051	L	WASHER-SPRING	2C08
WM 600051	L	WASHER-SPRING	2C10
WM 600051	L	WASHER-SPRING	2E02

PART NUMBER		DESCRIPTION	REF.NO.
WM 600051	L	WASHER-SPRING	2E11
WM 600051	L	WASHER-SPRING	2E13
WM 600051	L	WASHER-SPRING	2E15
WM 600051	L	WASHER-SPRING	2E16
WM 600051	L	WASHER-SPRING	2G02
WM 600051	L	SPRING WASHER	2G13
WM 600051	L	WASHER-SPRING	2G17
WM 600051	L	WASHER-SPRING	2G18
WM 600051	L	WASHER-SPRING	2H05
WM 600051	L	WASHER-SPRING	2H06
WM 600051	L	WASHER-SPRING	2H08
WM 600051	L	WASHER-SPRING	2H15
WM 600051	L	SPRING WASHER	2H16
WM 600051	L	WASHER SPRING	2I02
WM 600051	L	WASHER-SPRING	2I15
WM 600051	L	WASHER	2J13
WM 600051	L	WASHER-SPRING	2K02
WM 600051	L	WASHER-SPRING	2K03
WM 600051	L	WASHER-SPRING	2K04
WM 600051	L	WASHER-SPRING	2L12
WM 600051	L	WASHER SPRING	2L13
WM 600051	L	WASHER-SPRING	2L14
WM 600051	L	WASHER-SPRING	2L15
WM 600051	L	SPRING WASHER FIXING BRACKETS	2L17
WM 600061	L	SPRING WASHER	1C14
WM 600061	L	WASHER-SPRING	1D12
WM 600061	L	WASHER SPRING	1D13
WM 600061	L	WASHER SPRING	1D15
WM 600061	L	WASHER-SPRING	1E13
WM 600061	L	WASHER-SPRING	1F02
WM 600061	L	WASHER-SPRING	1F09
WM 600061	L	WASHER-SPRING	1F10
WM 600061	L	SPRING WASHER	1G02
WM 600061	L	WASHER-SPRING	1G03
WM 600061	L	WASHER-SPRING	1H03
WM 600061	L	WASHER SPRING	1H07
WM 600061	L	WASHER-SPRING	1H09
WM 600061	L	WASHER-SPRING	1I02
WM 600061	L	WASHER-SPRING	1J10
WM 600061	L	SPRING WASHER	1J11
WM 600061	L	WASHER-SPRING	1J13
WM 600061	L	WASHER-SPRING	1K07
WM 600061	L	SPRING WASHER	1L03
WM 600061	L	WASHER-SPRING	1L05
WM 600061	L	WASHER-SPRING	1L14

PART NUMBER		DESCRIPTION	REF.NO.
WM 600061	L	WASHER-SPRING	1L15
WM 600061	L	WASHER-SPRING	1M04
WM 600061	L	WASHER-SPRING	1N11
WM 600061	L	WASHER-SPRING	1N12
WM 600061	L	WASHER-SPRING	1N13
WM 600061	L	WASHER-SPRING	1N13
WM 600061	L	WASHER-SPRING	1O02
WM 600061	L	WASHER-SPRING	1O03
WM 600061	L	WASHER-SPRING	1O05
WM 600061	L	WASHER-SPRING	1O06
WM 600061	L	WASHER-SPRING	1O08
WM 600061	L	WASHER-SPRING	2C05
WM 600061	L	WASHER-SPRING	2C09
WM 600061	L	WASHER-SPRING	2E07
WM 600061	L	WASHER-SPRING	2E08
WM 600061	L	WASHER-SPRING	2E09
WM 600061	L	WASHER-SPRING	2E16
WM 600061	L	WASHER-SPRING	2G02
WM 600061	L	WASHER-SPRING	2G07
WM 600061	L	WASHER-SPRING	2H02
WM 600061	L	WASHER-SPRING	2H05
WM 600061	L	WASHER SPRING	2H12
WM 600061	L	WASHER-SPRING	2I02
WM 600061	L	WASHER SPRING	2L03
WM 600071	L	WASHER SPRING	1C12
WM 600071	L	WASHER-SPRING	1D13
WM 600071	L	WASHER-SPRING	1E12
WM 600071	L	WASHER SPRING	1E12
WM 600071	L	WASHER-SPRING	1F02
WM 600071	L		2E09
WM 600071	L	WASHER-SPRING	2G14
WM 600081	L	SPRING WASHER	1C02
WM 600081	L	WASHER-SPRING	1D03
WM 600081	L	WASHER SPRING	1E02
WM 600081	L	WASHER-SPRING	1J16
WM 600081	L	WASHER-SPRING	1J18
WM 702001	L	SPRING WASHER	1C11
WM 702001	L	WASHER-SPRING	1D11
WM 702001	L	WASHER-SPRING	1E09
WM 702001	L	WASHER-SPRING	1F06
WM 702001	L	WASHER-SPRING	1L07
WM 702001	L	WASHER-SPRING	1L09
WM 702001	L	SPRING WASHER	1L10
WM 702001	L	SPRING WASHER	1L11
WM 702001	L	SPRING WASHER	1L12

PART NUMBER		DESCRIPTION	REF.NO.
WM 702001	L	SPRING WASHER	1L13
WM 702001	L	WASHER-SPRING	1M07
WM 702001	L	WASHER	1M12
WM 702001	L	SPRING WASHER BREATHER FILTER	1N04
WM 702001	L	WASHER-SPRING	1N11
WM 702001	L	WASHER-SPRING	1N12
WM 702001	L	WASHER-SPRING	1N13
WM 702001	L	WASHER-SPRING	1N13
WM 702001	L	WASHER-SPRING	1N14
WM 702001	L	WASHER-SPRING	1N15
WM 702001	L	WASHER-SPRING	1N16
WM 702001	L	WASHER-SPRING	1N17
WM 702001	L	WASHER-SPRING	1O10
WM 702001	L	WASHER-SPRING	1O12
WM 702001	L	WASHER-SPRING	1O14
WM 702001	L	WASHER-SPRING	2C09
WM 702001	L	WASHER-SPRING	2D02
WM 702001	L	WASHER SPRING	2D04
WM 702001	L	WASHER-SPRING	2F02
WM 702001	L	WASHER-SPRING	2F04
WM 702001	L	WASHER-SPRING	2F05
WM 702001	L	WASHER SPRING	2F07
WM 702001	L	WASHER-SPRING	2F08
WM 702001	L	WASHER-SPRING	2F10
WM 702001	L	WASHER-SPRING	2F12
WM 702001	L	SPRING WASHER	2F13
WM 702001	L	WASHER SPRING	2F14
WM 702001	L	SPRING WASHER	2F15
WM 702001	L	WASHER-SPRING	2G08
WM 702001	L	WASHER-SPRING	2G09
WM 702001	L	WASHER-SPRING	2G17
WM 702001	L	WASHER-SPRING	2H02
WM 702001	L	WASHER-SPRING	2H05
WM 702001	L	WASHER-SPRING	2H06
WM 702001	L	WASHER-SPRING	2H07
WM 702001	L	WASHER SPRING	2H14
WM 702001	L	WASHER-SPRING	2H15
WM 702001	L	WASHER-SPRING	2H17
WM 702001	L	WASHER-SPRING	2H18
WM 702001	L	SPRING WASHER	2I02
WM 702001	L	SPRING WASHER	2I03
WM 702001	L	WASHER-SPRING	2J03
WM 702001	L	WASHER-SPRING	2J05
WM 702001	L	WASHER-SPRING	2J09
WM 702001	L	WASHER-SPRING	2J12

PART NUMBER		DESCRIPTION	REF.NO.
WM 702001	L	WASHER-SPRING	2J13
WM 702001	L	WASHER-SPRING	2K02
WM 702001	L	WASHER-SPRING	2K04
WM 702001	L	WASHER-SPRING	2K05
WM 702001	L	WASHER-SPRING	2K06
WM 702001	L	WASHER-SPRING	2L12
WM 702001	L	WASHER-SPRING	2L13
WM 702001	L	WASHER-SPRING	2L14
WM 702001	L	WASHER-SPRING	2L15
WM 702001	L	SPRING WASHER FIXING SOLENOID	2L17
WM 702007		WASHER-SPRING	2J02
WM 704001	L	WASHER-SPRING	2F02
WM 704001	L	SPRING WASHER	2F04
WM 704001	L	SPRING WASHER	2F15
WP 105	L	PLAIN WASHER	2H08
WP 105	L	WASHER-PLAIN	2I15
WP 185	L	WASHER PLAIN	1K04
WP 185	L	WASHER-PLAIN	2G17
WP 185	L	WASHER-PLAIN	2H15
WP 8019	L	PLAIN WASHER	1007
WP 8019	L	WASHER-PLAIN	1009
WP 8019	L	WASHER-PLAIN	1011
WP 8019	L	WASHER-PLAIN	2G08
WP 8019	L	WASHER-PLAIN	2G10
WP 8019	L	WASHER-PLAIN	2G12
WP 8019	L	WASHER-PLAIN	2G13
WP 8019	L	WASHER-PLAIN	2H13
WP 8019	L	WASHER-PLAIN	2I15
WP 8019	L	WASHER-PLAIN	2J16
WS 106001	L	WASHER SPRING	2H02
WS 106001	L	WASHER SPRING	2H05
WS 600041	L	SPRING WASHER	2D02
WS 600041	L	WASHER SPRING	2D03
WS 600041	L	SPRING WASHER	2H02
WS 600041	L	WASHER-SPRING	2H05
WS 600041	L	WASHER SPRING	2H12
WS 600061		SPRING WASHER	2I02
WZX 1701	L	VALVE ASSEMBLY KIT	1N07
WZX 1712	L	DIAPHRAGM ASSEMBLY	1N07

ASHLEY
4-10-03

LAND ROVER PARTS LTD

Land Rover Parts Ltd International House, Bickenhill Lane, Birmingham, England B37 7HQ Tel: 021-781 6000